Worldwide Sumitomo Network

U.S.A.
Sumitomo Machinery Corporation of America (SMA)
4200 Holland Blvd.
Chesapeake, VA 23323,
U.S.A.
Tel: (1) 757-485-3355
Fax: (1) 757-487-3193

Canada
SM-Cyclo of Canada, Ltd. (SMC)
1045 South Service Road,
West Oakville Ontario,
Canada L6L 6K3
Tel: (1) 905-469-1050
Fax: (1) 905-469-1055

Mexico
SM-Cyclo De Mexico, S.A. de C.V. (SMME)
Calle "C" No. 506A Parque Industrial
Almacentro Apodaca, N. L., Mexico 66600
Tel: (52) 81-8369-3697
Fax: (52) 81-8369-3699

Brazil
SM-Cyclo Reductores Do Brasil, Ltda. (SMBR)
Av. Fagundes Filho, 191 Metro Sao Judas
Edificio Houston-Sala H123 Sao Paulo-SP
Brazil 04304-010
Tel: (55) 11-5585-3600
Fax: (55) 11-5585-9990

Chile
SM-Cyclo De Chile, Ltda. (SMCH)
San Pablo Ave, 3507 Quinta Nomal,
Santiago, Chile
Tel: (56) 2-786-6963
Fax: (56) 2-786-6964

Argentina
SM-Cyclo De Argentina S.A. (SMAR)
Montes de Oca #6719, (B1606BMG) Munro,
Buenos Aires, Argentina
Tel: (54) 11-4765-5288
Fax: (54) 11-4765-5517

United Kingdom
SM-Cyclo U.K. Ltd. (SMUK)
29 Bergen Way,
Sutton Fields Industrial Estate
Kingston upon Hull,
East Yorkshire HU7 0YQ
United Kingdom
Tel: (44) 1482-790340
Fax: (44) 1482-790321

France
SM-Cyclo France E.U.R.L. (SMFR)
65/75 Avenue Jean Mermoz
F-93126 La Courneuve,
France
Tel: (33) 149-929494
Fax: (33) 149-929490

Italy
SM-Cyclo Italy Srl (SMIT)
Via dell' Artigianato 231-20010
Cornaredo (Mi),
Italy
Tel: (39) 02-9356-2121
Fax: (39) 02-9356-9893

Netherlands
SM-Cyclo Benelux BV (SMBE)
Den Engelsman 16D NL-6026 RB
Maarheeze,
Netherlands
Tel: (31) 495599777
Fax: (31) 495593177

Sweden
SM-Cyclo Scandinavia AB (SMSC)
Ridbanegtan 4213 77 Malmö,
Sweden Postal Address: box
9178, SE-200 39 Malmö
Tel: (46) 40220030
Fax: (46) 40220035

Spain
SM-Cyclo Iberia, S.L. (SMIB)
C/Landabarri N 4 Escalera 1, 2 izqda Leioa
48940 Vizcaya Spain
Tel: (34) 944-805389
Fax: (34) 944-801550

Germany
Sumitomo (SHI) Cyclo Drive Germany, GmbH (SCG)
Cyclostraße 92
85229 Markt Indersdorf
Germany
Tel: (49) 8136-66-0
Fax: (49) 8136-5771

Austria
SCG Branch Austria Office
Gruentalerstraße 30A A4028 Linz,
Austria
Tel: (43) 732-330958
Fax: (43) 732-331978

China
Sumitomo (SHI) Cyclo Drive China, Ltd. (SCT)
Room 2606, Raffles City, No. 268,
Middle Xizang Road,
Shanghai 200001,
China
Tel: (86) 21-6340-4000
Fax: (86) 21-6340-3673

Hong Kong
SM-Cyclo of Hong Kong Co., Ltd. (SMHK)
Unit 1802, 18/F, Park Building,
476 Castle Peak Road, Kowloon,
Hong Kong
Tel: (852) 2460-1881
Fax: (852) 2460-1882

Singapore
Sumitomo (SHI) Cyclo Drive Asia Pacific Pte. Ltd. (SCA)
No.36 Tuas South Street 3,
Singapore 638031
Tel: (65) 6863-2238
Fax: (65) 6863-4238

Malaysia
SM-Cyclo (Malaysia) Sdn. Bhd. (SMMA)
No.2, Jalan BP 4/1,
Bandar Bukit Puchong, 47100 Puchong,
Selangor Darul Ehsan,
Malaysia
Tel: (60) 3-8061-2909
Fax: (60) 3-8061-3909

Thailand
SM-Cyclo (Thailand) Co., Ltd. (SMTH)
195, Empire Tower,
21st Floor Unit 2103-4
South Sathorn Road,
Yannawa Sathorn Bangkok 10120,
Thailand
Tel: (66) 2-670-0998
Fax: (66) 2-670-0999

Vietnam
Sumitomo (SHI) Cyclo-Drive Asia Pacific Pte. Ltd.
Representative Office in Ho Chi Minh
Floor 4th, 99 Nguyen Thi Minh Khai Street
World Ben Thanh, District 1, HCM,
Vietnam
Tel: (84) 8-925-6504
Fax: (84) 8-925-6505

Australia
SM-Cyclo (Australia) Pty., Ltd. (SMAU)
9 Holbeche Rd,
Arndell Park, NSW, 2148,
Australia
Postal: PO Box 319 Doonside NSW, 2767
Tel: (61) 2-8811-6555
Fax: (61) 2-8811-6500
National Telephone Number: 1-3000 DRIVE

Philippines
Sumitomo (SHI) Cyclo Drive Asia Pacific Pte. Ltd.
Representative Office
Unit 23E Burgundy Corporate Tower
252 Sen. Gil Puyat Ave. Makati City,
Philippines
Tel: (63) 2-6800-6500
Fax: (63) 2-6800-6555

India
Sumi-Cyclo Drive India Private, Ltd. (SMIN)
Survey No. 130, Hissa No. 02, Jeevan Nagar
Next to T. V. S. Logistics,
Off Mumbai Bangalore By Pass,
Tathawade, Pune 411 033,
India
Tel: (91) 20-6674-2900
Fax: (91) 20-6674-2901

Taiwan
Tatung SM-Cyclo Co., Ltd. (TSC)
22 Chungshan N. Road
3rd., Sec. Taipei, Taiwan 104, R.O.C.
Tel: (886) 2-2595-7275
Fax: (886) 2-2595-5594

Korea
Sumitomo (SHI) Cyclo Drive Korea Ltd. (SCK)
Royal Bldg. 9F Rm. 913,
5 Danju-dong, Jongro-Gu,
Seoul, Korea 110-721
Tel: (82) 2-730-0151
Fax: (82) 2-730-0156

Japan
Sumitomo Heavy Industries, Ltd.
ThinkPark Tower, 1-1, Osaki 2-Chome
Shinagawa-ku, Tokyo 141-6025,
Japan
Tel: (81) 3-6737-2511
Fax: (81) 3-6866-5160

CW19

Sumitomo Heavy Industries, Ltd.

No. C2001E-7.3

Sumitomo Drive Technologies

CYCLO® 6000 Series

Gearmotor & Speed Reducer

Sumitomo Drive Technologies

Always on the Move

CYCLO® 6000 Series

Gearmotor & Speed Reducer

No. C2001E-7

Table of Contents

	Page
A. Common	**A-1~12**
Features & Benefits	A-3
Product Line-up	A-4
Product Range of CYCLO® DRIVE	A-6
Product Range of Motor	A-9
B. Gearmotors	**B-1~154**
1. How to Select	B-2
2. Selection Tables	B-13
3. Dimension Tables	B-97
C. Speed Reducers	**C-1~88**
1. How to Select	C-2
2. Selection Tables	C-11
3. Dimension Tables	C-69
D. Gearmotor for Inverters with AF Motor for Inverters	**D-1~40**
1. How to Select	D-2
2. Selection Tables	D-11
3. Dimension Tables	D-27
E. Gearmotors with High Efficiency Motor	**E-1~6**
F. Technical Data	**F-1~68**
1. Reducer	F-2
2. Motor	F-31
3. Common	F-63
Warranty Standard	G-1
Warning	G-2

ISO9001 PTC NAGOYA PLANT
ISO14001 PTC NAGOYA PLANT

Over 10 Million in the Making

Sumitomo Drive Technologies is a world-class leader in power transmission and control devices. Our top lined product, the Cyclo® Drive is actively serving industries throughout the world through its popular and unique epitrochoidal mechanism. The Cyclo® Drive has served over ten million units worldwide in a wide range of model offerings.

With the technical know-how and experience cultivated over 70 years, we provide complete satisfaction with unrivalled product reliability, durability and economy. This is achieved through our continual product R & D and state-of-the-art production facilities. Sumitomo Drive Technologies is Quality System Certified to ISO 9001, EN29001, BS5750 Part 1: 1987, JIS Z9901: 1991 standard for design and manufacture of mechanical speed reducers, mechanical variators, electric motors and gearmotors in over 30 facilities located around the world.

The Sumitomo Drive Technologies' brand guarantees innovative, top quality products and services developed by the most advanced technologies. We strive to exceed the expectations of our customers, and continue to be your dependable partner in business.

High Shock Load, High Reliability Cycloidal Speed Reducers and Gearmotors

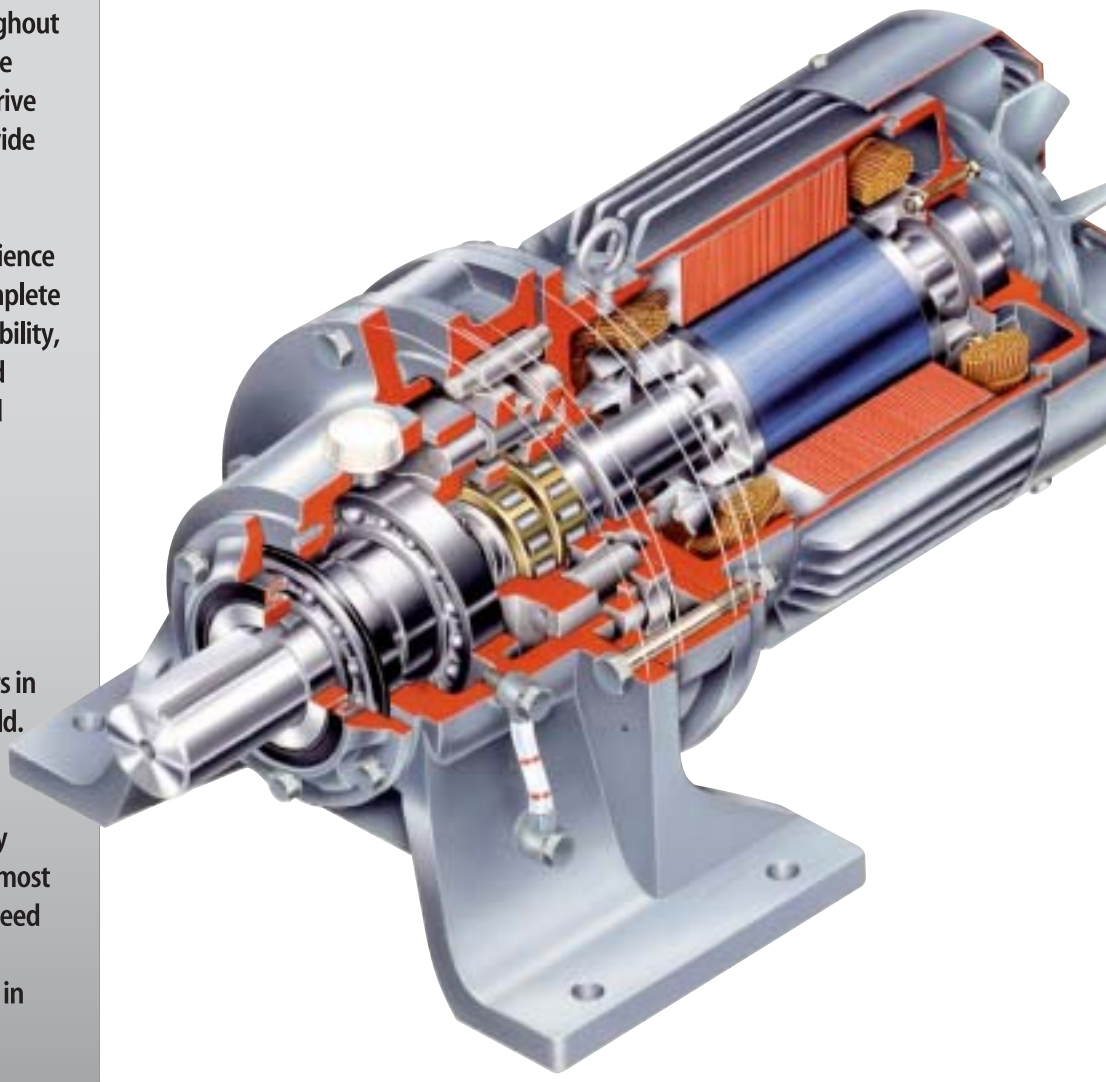

Exceptional Performance, Unmatched Reliability

The Sumitomo Cyclo® Drive is unsurpassed by any other inline drive available in the market today. Cyclo®'s unique cycloid design has advantages superior to speed reducers using common involute tooth gears. Compared to gear teeth with limited contact points of involute gears, the Cyclo® has two to three time more of its reduction components in contact at all times. Cyclo® speed reducers and gearmotors are designed to withstand shock loads exceeding ratings of 500%, provide exceptional performance, reliability, and long life in the most severe applications.

CYCLO® 6000 Series

Features & Benefits

Outstanding Reliability - 2 Year Warranty

Cyclo® Drive speed reducers and gearmotors provide customers with a typical operating life of 20 years. We back this assurance with a two year warranty on all Cyclo® products.

Durable, Robust Construction

On top of the unique mechanism and design, Cyclo® housings are made of cast iron with the exception of our three smallest size models. All rotating elements are made from Chromium Molybdenum bearing steel, which have been hardened and ground .

Smooth Operation and Low Noise

In comparison to the sliding tooth contact of the conventional gearing, the rolling contact of the Cyclo® system provides a reduced noise level.

Selection and Variety

Reduction Ratios from 1/3 to 1/119 are available for the single stage; for triple stages we offer ratios up to 1,000,000:1.

Applications

Applications Include: Conveyors, Automotive Plants, Recycling Machines, Waterwaste Treatment, Steel Mills, Construction Equipment, Paper Mills, Food Machinery, Poultry Plants, Sawmills and Wood Mills, Processing Plants, etc.

Clockwise from Top-Left: Chemical and Food Industry (agitator, mixer), Logistics and Handling Machines (sorting machines, conveyors), Iron and Steel Manufacturing (conveyors) and Water Treatment Machines (agitators).

Superior Design, Powerful Performance

CYCLO® SPEED REDUCER

All torque transmitting parts roll, not grind.
The gear tooth profile of the Cyclo® reducer enables the sharing of the load by a number of teeth, thus not susceptible to tooth breakage.

CONVENTIONAL HELICAL REDUCER

Involute gears allow for small tooth engagement rate.
Torque transmitting parts grind, wear, and can break off with the sliding contact.

Product Line-up

6W Commercial

Industrial

In-Line

ASTERO®

Practical and Convenient

Modular system of motors and gearheads. Maximum flexibility and interchangability.
Power: 6W~90W Ratio: 1/3~1/2000

CYCLO®

Unmatched Reliability, Exceptional Performance Cycloidal Drives

Unique Cycloidal gear teeth and mechanism is unsurpassed by any other inline drive. Simple and compact design.
Power: 0.1kW~132kW Ratio: 1/6~1/1,000,00

Offset-Parallel

Integrated parallel shaft mount design, single stage, helical gearbox for durability.
Power: 0.1kW~132kW Ratio: 1/6~1/1,000,00

Right-Angle

HYPONIC DRIVE®

Quiet, Compact & Maintenance Free

Highly efficient, grease lubricated, compact design hypoid gearing.
Power: 15W~90W Ratio:1/5~1/1440

Patented all-steel hypoid gear technology is extremely high-performance and more efficient than worm gearing.
Power: 90W~5.5kW Ratio: 1/5~1/1440

Incorporates the strength and flexibility of the Cyclo® Drive with adaptability of a shaft-mounted design in a right angle spiral bevel gearbox for exceptional reliability.
Power: 0.1kW~30kW Ratio: 1/11~1/10658

Motion Control Drives (MCD)

High Precision, Very Low Backlash

F Series CYCLO®
Rolling contact of cycloid discs, optimum load distribution, and low vibration yields highest efficiencies.

Torque: 111N•m ~5140N•m Ratio: 1/29~1/119
Backlash: No Backlash Lost Motion: 0.5~1.0arc min

IB Series P Type
Precision planetary gearheads for Servomotor applications in the most compact design.

Torque: 8.3N•m ~127N•m Ratio: 1/5~1/45
Backlash: 3~10min

Engineering 552kN•m

PARAMAX®

High Quality & Maximum Efficiency, Computer-Aided Design

9000 Series

The offset-parallel 9000 Series allow direct motor mounting and has universal housing for unique mounting positions.
Power: 2.6~552kN•m Ratio: 1/6.3~1/500

9000 Series

The new 9000 Series design combines helical gears and bevel gears in a right-angle gearbox for compact drive assembly.
Power: 2.6~552kN•m Ratio: 1/6.3~1/500

LB Series CYCLO®
The reputation of the Cyclo® Drive's strength to the Servomotor gives us a direct coupling gearhead possibility for a maintenance free operation.

Torque: 30N•m~630Nm Ratio: 1/11~1/29
Backlash: 6min

Sumitomo Drives

Speed Variators

BEIER Variator
BEIER CYCLO® Variator

Constant power torque converters with extremely accurate speed/ratio holding and repeatability to control speeds on industrial machinery.
Capacity: 0.2kW~150kW

Inverters
SF320α, HF320α, HF430

Multiple functions, easy to use highly efficient Inverter.
Output Power: 0.1kW~55kW

Shaft-Mounted Speed Reducer

HSM

Maximum loading and the highest efficiency torque output in the most compact design.
Power: 0.2kW~224kW

Worm Gears

HEDCON®

Unique double contact theory, high efficiency, and high strength work reduction mechanism.
Power: 589~82,400N•m
Ratio: 1/5~1/100

Planetary Gears

COMPOWER®

Unique load sharing mechanism, high precision carburized ground gears.
Power: 1.47~736kN•m
Ratio: 1/5~1/1768

Product Line-up

Product Range of CYCLO® DRIVE

CYCLO® Frame Size

Table A-1 CYCLO Frame Size

6000SK Series Frame Size
6070SK
6075SK
6080SK
6085SK
6090SK
6095SK
6100SK
6105SK
6110SK
6115SK

6000 Series							
Single Reduction		Double Reduction					
Frame Size		Frame Size	(Output side + Input side)	Frame Size	(Output side + Input side)	Frame Size	(Output side + Input side)
6060	6140	6060DA	(6060+6060)	6140DC	(6140+6105)	6190DA	(6190+6125)
6065	6145	6065DA	(6065+6060)	6145DA	(6145+6075)	6190DB	(6190+6135)
6070	614H	6070DA	(6070+6065)	6145DB	(6145+6095)	6195DA	(6195+6125)
6075	6160	6075DA	(6075+6065)	6145DC	(6145+6105)	6195DB	(6195+6135)
6080	6165	6090DA	(6090+6075)	6160DA	(6160+6095)	6205DA	(6205+6125)
6085	616H	6095DA	(6095+6075)	6160DB	(6160+6105)	6205DB	(6205+6135)
6090	6170	6100DA	(6100+6075)	6160DC	(6160+6125)	6215DA	(6215+6135)
6095	6175	6105DA	(6105+6075)	6165DA	(6165+6095)	6215DB	(6215+6165)
6100	6180	6120DA	(6120+6075)	6165DB	(6165+6105)	6225DA	(6225+6135)
6105	6185	6120DB	(6120+6095)	6165DC	(6165+6125)	6225DB	(6225+6175)
610H	6190	6125DA	(6125+6075)	6170DA	(6170+6095)	6235DA	(6235+6165)
6110	6195	6125DB	(6125+6095)	6170DB	(6170+6105)	6235DB	(6235+6185)
6115	6205	6130DA	(6130+6075)	6170DC	(6170+6125)	6245DA	(6245+6165)
6120	6215	6130DB	(6130+6095)	6175DA	(6175+6095)	6245DB	(6245+6185)
6125	6225	6130DC	(6130+6105)	6175DB	(6175+6105)	6255DA	(6255+6175)
612H	6235	6135DA	(6135+6075)	6175DC	(6175+6125)	6255DB	(6255+6195)
6130	6245	6135DB	(6135+6095)	6180DA	(6180+6105)	6265DA	(6265+6195)
6135	6255	6135DC	(6135+6105)	6180DB	(6180+6135)	6275DA	(6275+6195)
	6265	6140DA	(6140+6075)	6185DA	(6185+6105)		
	6275	6140DB	(6140+6095)	6185DB	(6185+6135)		

Reduction Ratio

Table A-2 6000 Series

Single Reduction								
6	8	11	13	15	17	21	25	29
35	43	51	59	71	87	119		

Double Reduction indicated in catalog (Upper row: reduction ratio, lower row: output side reduction ratio x input side reduction ratio)										
104	121	143	165	195	231	273	319	377	473	559
(13 × 8)	(11 × 11)	(13 × 11)	(15 × 11)	(15 × 13)	(21 × 11)	(21 × 13)	(29 × 11)	(29 × 13)	(43 × 11)	(43 × 13)
649	731	841	1003	1247	1479	1849	2065	2537	3045	3481
(59 × 11)	(43 × 17)	(29 × 29)	(59 × 17)	(43 × 29)	(87 × 17)	(43 × 43)	(59 × 35)	(59 × 43)	(87 × 35)	(59 × 59)
4437	5133[Note: 1]	6177	7569							
(87 × 51)	(87 × 59)	(87 × 71)	(87 × 87)							

Note: 1. Frame size 6205# ~ 6265# are (59 × 87).

Other Reduction Ratios (Under certain conditions, the following reduction ratios may also be available, please consult us.)

Reduction Ratio		88	90	102	120	126	136	150	168	169	174	187	200	210	221	225	232	255	258	275
		(11 × 8)	(15 × 6)	(17 × 6)	(15 × 8)	(21 × 6)	(17 × 8)	(25 × 6)	(21 × 8)	(13 × 13)	(29 × 6)	(17 × 11)	(25 × 8)	(35 × 6)	(17 × 13)	(15 × 15)	(29 × 8)	(17 × 15)	(43 × 6)	(25 × 11)
Output speed	50Hz	16.5	16.1	14.2	12.1	11.5	10.7	9.67	8.63	8.58	8.33	7.75	7.25	6.90	6.56	6.44	6.25	5.69	5.62	5.27
r/min	60Hz	19.9	19.4	17.2	14.6	13.9	12.9	11.7	10.4	10.4	10.1	9.36	8.75	8.33	7.92	7.78	7.54	6.86	6.87	6.36
Reduction Ratio		280	289	306	315	325	344	354	357	375	385	408	425	426	435	441	455	472	493	522
		(35 × 8)	(17 × 17)	(51 × 6)	(21 × 15)	(25 × 13)	(43 × 8)	(59 × 6)	(21 × 17)	(25 × 15)	(35 × 11)	(51 × 8)	(25 × 17)	(71 × 6)	(29 × 15)	(21 × 21)	(35 × 13)	(59 × 8)	(29 × 17)	(87 × 6)
Output speed	50Hz	5.18	5.02	4.74	4.60	4.46	4.22	4.10	4.06	3.87	3.77	3.55	3.41	3.40	3.33	3.29	3.19	3.07	2.94	2.78
r/min	60Hz	6.25	6.06	5.72	5.56	5.38	5.09	4.94	4.90	4.67	4.55	4.29	4.12	4.11	4.02	3.97	3.85	3.71	3.55	3.35
Reduction Ratio		525	561	568	595	609	625	645	663	696	725	735	765	767	781	867	875	885	903	923
		(35 × 15)	(51 × 11)	(71 × 8)	(35 × 17)	(29 × 21)	(25 × 25)	(43 × 15)	(51 × 13)	(87 × 8)	(29 × 25)	(35 × 21)	(51 × 15)	(59 × 13)	(71 × 11)	(51 × 17)	(35 × 25)	(59 × 15)	(43 × 21)	(71 × 13)
Output speed	50Hz	2.76	2.58	2.55	2.44	2.38	2.32	2.25	2.19	2.08	2.00	1.97	1.90	1.89	1.86	1.67	1.66	1.64	1.61	1.57
r/min	60Hz	3.33	3.12	3.08	2.94	2.87	2.80	2.71	2.64	2.51	2.41	2.38	2.29	2.28	2.24	2.02	2.00	1.98	1.94	1.90
Reduction Ratio		957	1015	1065	1071	1075	1131	1207	1225	1239	1275	1305	1475	1491	1505	1711	1775	1785	1827	2059
		(87 × 11)	(35 × 29)	(71 × 15)	(51 × 21)	(43 × 25)	(87 × 13)	(71 × 17)	(35 × 35)	(59 × 21)	(51 × 25)	(87 × 15)	(59 × 25)	(71 × 21)	(43 × 35)	(59 × 29)	(71 × 25)	(51 × 35)	(87 × 21)	(71 × 29)
Output speed	50Hz	1.52	1.43	1.36	1.35	1.35	1.28	1.20	1.18	1.17	1.14	1.11	0.98	0.97	0.96	0.85	0.82	0.81	0.79	0.70
r/min	60Hz	1.83	1.72	1.64	1.63	1.63	1.55	1.45	1.43	1.41	1.37	1.34	1.19	1.17	1.16	1.02	0.99	0.98	0.96	0.85
Reduction Ratio		2175	2193	2485	2523	2601	3009	3053	3621	3741	4189	5041								
		(87 × 25)	(51 × 43)	(71 × 35)	(87 × 29)	(51 × 51)	(59 × 51)	(71 × 43)	(71 × 51)	(87 × 43)	(71 × 59)	(71 × 71)								
Output speed	50Hz	0.67	0.66	0.58	0.57	0.56	0.48	0.47	0.40	0.39	0.45	0.29								
r/min	60Hz	0.80	0.80	0.70	0.69	0.67	0.58	0.57	0.48	0.47	0.42	0.35								

Calculation of output speed is based on the following input speed.
50Hz: 1450r/min
60Hz: 1750r/min

Table A-3 6000SK Series (Actual Reduction Ratio)

	Nominal Reduction Ratio						
Frame Size	2.5	3	4	5	6	8	10
6070SK, 6075SK	2.514	2.911	3.985	5.109	5.915	8.097	9.848
6080SK, 6085SK	2.475	2.931	3.878	5.114	6.164	7.660	9.474
6090SK, 6095SK	2.492	2.878	4.100	5.017	5.623	8.169	9.996
6100SK, 6105SK	2.492	2.878	4.100	5.017	5.623	8.169	9.996
6110SK, 6115SK	2.483	3.063	3.859	4.707	5.980	7.738	10.07

*Note that reduction ratio differs for each frame size for 6000SK Series.

Product Range of CYCLO® DRIVE

Available Combination

Table A-4 6000SK Series

Nominal Reduction Ratio		2.5	3	4	5	6	8	10
Output Speed	50Hz	580	483	363	290	242	181	145
[r/min]	60Hz	700	583	438	350	292	219	175
0.4 × 4P	kW	●	●	●	●	●	●	●
0.55 × 4P	kW	●	●	●	●	●	●	●
0.75 × 4P	kW	●	●	●	●	●	●	●
1.1 × 4P	kW	●	●	●	●	●	●	●
1.5 × 4P	kW	●	●	●	●	●	●	●
2.2 × 4P	kW	●	●	●	●	●	●	●
3.0 × 4P	kW	●	●	●	●	●	●	●
3.7 × 4P	kW	●	●	●	●	●	●	●
5.5 × 4P	kW	●	●	●	●	●	●	

Table A-5 6000 Series Single Reduction

Reduction Ratio		6	8	11	13	15	17	21	25	29	35	43	51	59	71	87	119
Output Speed	50Hz	242	181	132	112	96.7	85.3	69	58	50	41.4	33.7	28.4	24.6	20.4	16.7	12.2
[r/min]	60Hz	292	219	159	135	117	103	83.3	70	60.3	50	40.7	34.3	29.7	24.6	20.1	14.7
0.1 × 4P	kW	●	●	●	●	●	●	●	●	●	●	●	●	●	●	●	●
0.2 × 4P	kW	●	●	●	●	●	●	●	●	●	●	●	●	●	●	●	●
0.25 × 4P	kW	●	●	●	●	●	●	●	●	●	●	●	●	●	●	●	●
0.4 × 4P	kW	●	●	●	●	●	●	●	●	●	●	●	●	●	●	●	
0.55 × 4P	kW	●	●	●	●	●	●	●	●	●	●	●	●	●	●	●	
0.75 × 4P	kW	●	●	●	●	●	●	●	●	●	●	●	●	●	●	●	
1.1 × 4P	kW	●	●	●	●	●	●	●	●	●	●	●	●	●	●	●	
1.5 × 4P	kW	●	●	●	●	●	●	●	●	●	●	●	●	●	●	●	
2.2 × 4P	kW	●	●	●	●	●	●	●	●	●	●	●	●	●	●	●	
3.0 × 4P	kW	●	●	●	●	●	●	●	●	●	●	●	●	●	●	●	
3.7 × 4P	kW	●	●	●	●	●	●	●	●	●	●	●	●	●	●	●	
5.5 × 4P	kW	●	●	●	●	●	●	●	●	●	●	●	●	●	●	●	
7.5 × 4P	kW	●	●	●	●	●	●	●	●	●	●	●	●	●	●	●	
11 × 4P	kW	●	●	●	●	●	●	●	●	●	●	●	●	●	●	●	
15 × 4P	kW	●	●	●	●	●	●	●	●	●	●	●	●	●	●	●	
18.5 × 4P	kW	●	●	●	●	●	●	●	●	●	●	●	●	●	●		
22 × 4P	kW	●	●	●	●	●	●	●	●	●	●	●	●	●			
30 × 4P	kW	●	●	●	●	●	●	●	●	●	●	●	●	●			
37 × 4P	kW			●	●	●	●	●	●	●	●	●		●			
45 × 4P	kW			●	●	●	●	●	●	●		●					
55 × 4P	kW			●		●		●		●		●					
75 × 4P	kW			●		●		●		●							

Reduction Ratio		11	15	21	29	43	59	87
Output Speed	50Hz	89.1	65.3	46.7	33.8	22.8	16.6	11.3
[r/min]	60Hz	106	77.7	55.5	40.2	27.1	19.7	13.4
15 × 6P	kW						●	●
18.5 × 6P	kW					●	●	●
22 × 6P	kW					●	●	●
30 × 6P	kW			●	●	●	●	●
37 × 6P	kW		●	●	●	●	●	●
45 × 6P	kW		●	●	●	●	●	●
55 × 6P	kW	●	●	●	●	●	●	
75 × 6P	kW	●	●	●	●	●	●	
90 × 6P	kW	●	●	●	●	●		
110 × 6P	kW	●	●	●	●	●		
132 × 6P	kW	●	●	●	●			

Note:
1. Calculation of output speed is based on the following input speed.
   - 4P Motor
     50Hz: 1450 r/min
     60Hz: 1750 r/min
   - 6P Motor
     50Hz: 980 r/min
     60Hz: 1165 r/min
2. Combination in the table is based on service factor 1.0. Refer to Gearmotor Selection Table for combinations with other service factors.
3. Reduction ratios in 6000SK Series table are nominal ratios. Output speeds are based on these ratios. Refer to "Reduction Ratio" tables in the previous page for actual reduction ratio.
4. The rated current of 6P motor is different from the one of 4P motor even if the power is same.

Product Range of CYCLO® DRIVE

Table A-6 6000 Series Double Reduction

Reduction Ratio	104	121	143	165	195	231	273	319	377	473	559	649	731	841	1003	1247	1479	1849	2065
Output Speed 50Hz	13.9	12.0	10.1	8.79	7.44	6.28	5.31	4.55	3.85	3.07	2.59	2.23	1.98	1.72	1.45	1.16	0.980	0.784	0.702
[r/min] 60Hz	16.8	14.5	12.2	10.6	8.97	7.58	6.41	5.49	4.64	3.70	3.13	2.70	2.39	2.08	1.74	1.40	1.18	0.946	0.847
0.1 × 4P kW	●	●	●	●	●	●	●	●	●	●	●	●	●	●	●	●	●	●	●
0.2 × 4P kW	●	●	●	●	●	●	●	●	●	●	●	●	●	●	●	●	●	●	●
0.25 × 4P kW	●	●	●	●	●	●	●	●	●	●	●	●	●	●	●	●	●	●	●
0.4 × 4P kW	●	●	●	●	●	●	●	●	●	●	●	●	●	●	●	●	●	●	●
0.55 × 4P kW	●	●	●	●	●	●	●	●	●	●	●	●	●	●	●	●	●	●	
0.75 × 4P kW	●	●	●	●	●	●	●	●	●	●	●	●	●	●	●	●	●	●	●
1.1 × 4P kW	●	●	●	●	●	●	●	●	●	●	●	●	●	●	●	●	●	●	●
1.5 × 4P kW	●	●	●	●	●	●	●	●	●	●	●	●	●	●	●	●	●	●	●
2.2 × 4P kW	●	●	●	●	●	●	●	●	●	●	●	●	●	●	●	●	●	●	●
3.0 × 4P kW	●	●	●	●	●	●	●	●	●	●	●	●	●	●	●	●	●	●	●
3.7 × 4P kW	●	●	●	●	●	●	●	●	●	●	●	●	●	●	●	●	●	●	●
5.5 × 4P kW	●	●	●	●	●	●	●	●	●	●	●	●	●	●	●	●	●	●	●
7.5 × 4P kW	●	●	●	●	●	●	●	●	●	●	●	●	●	●	●	●	●	●	●
11 × 4P kW	●	●	●	●	●	●	●	●	●	●	●	●	●	●	●	●	●		
15 × 4P kW	●	●		●	●	●	●	●	●	●	●	●	●	●	●				
18.5 × 4P kW		●		●	●	●	●	●	●	●	●	●	●	●					
22 × 4P kW		●		●	●	●	●	●	●	●	●	●							
30 × 4P kW		●		●	●	●	●	●	●	●									
37 × 4P kW		●		●	●	●		●	●										
45 × 4P kW		●		●	●			●											

Reduction Ratio	2537	3045	3481	4437	5133	6177	7569
Output Speed 50Hz	0.572	0.476	0.417	0.327	0.282	0.235	0.192
[r/min] 60Hz	0.690	0.575	0.503	0.394	0.341	0.283	0.231
0.1 × 4P kW	●	●	●	●	●	●	●
0.2 × 4P kW	●	●	●	●	●	●	●
0.25 × 4P kW	●	●					
0.4 × 4P kW	●	●	●	●	●	●	●
0.75 × 4P kW	●	●	●	●	●	●	●
1.5 × 4P kW	●	●	●	●	●	●	●
2.2 × 4P kW	●	●	●	●	●	●	●
3.7 × 4P kW	●	●	●	●	●	●	●
5.5 × 4P kW	●	●	●	●	●	●	●

Note: 1. Calculation of output speed is based on the following input speed.
- 4P Motor
  50Hz: 1450 r/min
  60Hz: 1750 r/min
- 6P Motor
  50Hz: 980 r/min
  60Hz: 1165 r/min

2. Combination in the table is based on service factor 1.0. Refer to Gearmotor Selection Table for combinations with other service factors.
3. Reduction ratios in 6000SK Series table are nominal ratios. Output speeds are based on these ratios. Refer to "Reduction Ratio" tables in the previous page for actual reduction ratio.
4. The rated current of 6P motor is different from the one of 4P motor even if the power is same.

Product Range of Motor

Table A-7 3-Phase Induction Motors ◎: Standard Thermal Class ○: Manufactured Models

Specification / Capacity [kW]	P	Indoor or Outdoor (IP55)				Corrosion Proof Class 2		Thermal Class							Inverter Motors (Constant Torque)			
								E	B		F		H		Indoor Type		Outdoor Type	
		4	6	4	6	4	6	4	4	6	4	6	4	6	4	6	4	6
0.1		○	○	○	○	○	○	○	○	◎	◎	○	○	○	○		○	
0.2		○	○	○	○	○	○	○	○	◎	◎	○	○	○	○		○	
0.25		○	○	○	○	○	○	○	○	◎	◎	○	○	○				
0.4		○	○	○	○	○	○	○	○	◎	◎	○	○	○	○		○	
0.55		○	○	○	○	○	○		○	◎	◎	○	○	○				
0.75		○	○	○	○	○	○		○	◎	◎	○	○	○	○		○	
1.1		○	○	○	○	○	○		○	◎	◎	○	○	○				
1.5		○	○	○	○	○	○		○	◎	◎	○	○	○	○		○	
2.2		○	○	○	○	○	○		○	◎	◎	○	○	○	○		○	
3.0		○	○	○	○	○	○		○	◎	◎	○	○	○				
3.7		○	○	○	○	○	○		○	◎	◎	○	○	○	○		○	
5.5		○	○	○	○	○	○		○	◎	◎	○	○	○	○	○	○	○
7.5		○	○	○	○	○	○		○	◎	◎	○	○	○	○	○	○	○
11		○	○	○	○	○	○		○	◎	◎	○	○	○	○	○	○	○
15		○	○	○	○	○	○		○	◎	◎	○	○	○	○	○	○	○
18.5		○	○	○	○	○	○		○		◎	◎	○	○	○	○	○	○
22		○	○	○	○	○	○		○		◎	◎	○	○	○	○	○	○
30		○	○	○	○	○	○				◎	◎	○	○	○	○	○	○
37		○	○	○	○	○	○				◎	◎	○	○	○	○	○	○
45		○	○	○	○	○	○				◎	◎	○	○	○	○	○	○
55		○	○	○	○	○	○				◎	◎	○	○	○	○	○	○
Remarks		Continuous Rating Applicable Voltage: 4P: 3.7kW and below 220 - 240V 50Hz 220V 60Hz 380 - 420V 50Hz 5.5kW and above 380 - 420V 50Hz 440 - 480V 60Hz 6P: 200V 50/60Hz 220V 60Hz 400V 50/60Hz 440V 60Hz Provided that the base frequency for driving an inverter is 60Hz.																

Table A-8 3-Phase Induction Motors with Built-in Brakes ◎: Standard Thermal Class ○: Manufactured Models

Specification / Capacity [kW]	P	Indoor or Outdoor (IP55)		Corrosion Proof Class 2		Insulation Class							Inverter Motors (Constant Torque)			
						E	B		F		H		Indoor Type		Outdoor Type	
		4	6	4	6	4	4	6	4	6	4	6	4	6	4	6
0.1		○	○	○	○	◎	○	◎	○		○		○		○	
0.2		○	○	○	○	◎	○	◎	○		○		○		○	
0.25		○	○	○	○	◎	○	◎	○		○					
0.4		○	○	○	○	◎	○	◎	○	○	○	○	○		○	
0.55		○	○	○	○		◎	◎	○		○					
0.75		○	○	○	○		◎	◎	○	○	○	○	○		○	
1.1		○	○	○	○		◎	◎	○		○					
1.5		○	○	○	○		◎	◎	○	○	○	○	○		○	
2.2		○	○	○	○		◎	◎	○	○	○	○	○		○	
3.0		○	○	○	○		◎	◎	○		○					
3.7		○	○	○	○		◎	◎	○	○	○	○	○		○	
5.5		○	○	○	○		◎	◎	○	○	○	○	○	○	○	○
7.5		○	○	○	○		◎	◎	○	○	○	○	○	○	○	○
11		○	○	○	○		◎	◎	○	○	○	○	○	○	○	○
15		○	○	○	○		◎	◎	○	○	○	○	○	○	○	○
18.5		○	○	○	○		◎		○	◎	○	○	○	○	○	○
22		○	○	○	○		◎		○	◎	○	○	○	○	○	○
30		○	○	○	○				◎	◎	○	○	○	○	○	○
37		○	○	○	○				◎	◎	○	○	○	○	○	○
Remarks		Continuous Rating Applicable Voltage: 4P: 3.7kW and below 220 - 240V 50Hz 220V 60Hz 380 - 420V 50Hz 5.5kW and above 380 - 420V 50Hz 400V 60Hz Brake Thermal Class: F 6P: 200V 50/60Hz 220V 60Hz 400V 50/60Hz 440V 60Hz Provided that the base frequency for driving an inverter is 60Hz.														

Note: 1. Motors with capacities and specifications other than as listed in Tables A-7 ~ A-10 are also manufactured .Consult factory.
Examples: Special voltage, dust-proof, humidity proof, tropical treatment, high temperature, ship use, dual shaft (round & square shaft), CSA Standard, NEMA Standard, etc. For other corresponding Standards, refer to Comparison of Sumitomo Standards with International Standards on Page F52 ~ 56 of Technical Information.
2. Indicate outdoor type when placing 6P motor outdoor. Structure differs for indoor and outdoor type although protection type is IP44.
3. For inverter drive use, consult us with ambient temperature, input speed, mounting method, load characteristics, and other operation conditions. Startup properties, lubrication, thermal rating, and such must be reviewed for selection of proper CYCLO DRIVE frame size for combination.
4. For standard electric motor use with inverter, consult us if input voltage is high (400V or more), carrier frequency is high (typical in IGBT), or wiring distance is large. Review of withstand voltage of the motor may be necessary.

Product Range of Motor

Table A-9 Increased Safety (eG3) 3-Phase Induction Motor

◎: Standard Insulation ○: Manufactured Models

Specification / Capacity [kW]	P	Indoor Type (IP44)		Outdoor Type (IP44)		Corrosion Proof Class 2		Thermal Class B		Thermal Class F	
		4	6	4	6	4	6	4	6	4	6
0.1		○		○		○		◎		○	
0.2		○		○		○		◎		○	
0.4		○		○		○		◎		○	
0.75		○		○		○		◎		○	
1.5		○		○		○		◎		○	
2.2		○		○		○		◎		○	
3.7		○		○		○		◎		○	
5.5		○		○		○		◎		○	
7.5		○	○	○	○	○	○	◎	◎	○	
11		○	○	○	○	○	○	◎	◎	○	
15		○	○	○	○	○	○	◎	◎		
18.5		○	○	○	○	○	○	◎			◎
22		○	○	○	○	○	○	◎			◎
30		○	○	○	○	○	○	◎		○	◎
37		○	○	○	○	○	○			◎	◎
45		○	○	○	○	○	○			◎	◎
55		○	○	○	○	○	○			◎	◎
Remarks		Continuous Rating Applicable Voltage: 200V, 220V, 350V, 380V, 400V, 440V, 50/60Hz									

Table A-10 Flame-Proof (d2G4) 3-Phase Motor

◎: Standard Insulation ○: Manufactured Models

Specification / Capacity [kW]	P	Indoor Type (IP44)		Outdoor Type (IP44)		Corrosion Proof Class 1, 2		Thermal Class B		Thermal Class F		Inverter Motors (Constant Torque) Indoor Type	Inverter Motors (Constant Torque) Outdoor Type
		4	6	4	6	4	6	4	6	4	6	4	6
0.1		○		○		○		◎		○			
0.2		○		○		○		◎		○		○	
0.4		○		○		○		◎		○		○	
0.75		○		○		○		◎		○		○	
1.5		○		○		○		◎		○		○	
2.2		○		○		○		◎		○		○	
3.7		○		○		○		◎		○		○	
5.5		○		○		○		◎		○		○	
7.5		○		○		○		◎		○		○	
11		○		○		○		◎		○		○	
15		○	○	○	○	○	○	◎	○	○		○	○
18.5		○	○	○	○	○	○	◎	◎	○	○	○	○
22		○	○	○	○	○	○	◎	◎	○	○	○	○
30		○	○	○	○	○	○	◎	◎	○	○	○	○
37		○	○	○	○	○	○		◎	◎	○	○	○
Remarks		Continuous Rating Applicable Voltage: 200V, 220V, 350V, 380V, 400V, 440V, 50/60Hz (For inverter drive) 200V 60Hz 220V 60Hz 400V 60Hz 440V 60Hz Applicable inverter: Applicable only to Sumitomo inverters. (Refer to Inverter catalogue.)											

⚠ Safety Precautions

1. Authorized combination in Japan for motor and inverter is 1:1 when explosion protection motor is driven with inverter.
   Always operate with the specific indicated inverter. Always locate inverter unit in the area without explosive gas; it does not have explosion protection structure.
2. Consult us when the unit is exposed to the elements or to frequent water splashing.

MEMO

MEMO

B

CYCLO® GEARMOTORS

	Page
1. How to Select	
Standard Specifications	B-3
Model Selection	B-4
Selection of Load Factor	B-7
Nomenclature	B-9
2. Selection Tables	B-13
3. Dimension Tables	B-97

B CYCLO® GEARMOTORS

1. How to Select

Standard Specifications of Gearmotor

Motor

Items	Standard Specification			Standard Specification with Built-in Brake		
Capacity Range	0.1 - 55kW × 4P 15 - 55kW × 6P			0.1 - 11kW × 4P FB Brake (Non-Asbestors) 15kW × 4P CMB Brake 18.5 -37kW × 4P ESB Brake *For 6P motor with brake, consult us.		
Enclosure	Totally enclosed fan cooled type (0.1kW × 4P totally enclosed non-ventilated)			Totally enclosed fan cooled type (0.1kW × 4P totally enclosed non-ventilated)		
Power Source	0.1 - 3.7kW:	220 - 240V	50Hz	0.1 - 3.7kW:	220 - 240V	50Hz
		220V	60Hz		220V	60Hz
		380 - 420V	50Hz		380 - 420V	50Hz
	5.5 - 55kW:	380 - 420V	50Hz	5.5 - 37kW:	380 - 420V	50Hz
		440V	60Hz		440V	60Hz
Thermal Class	F			F		
Time Rating	Continuous rating			Continuous rating		
Terminal Box Position & Lead Wire Direction	On the left side viewed from the load side. Regarding the draw out hole direction, refer to Table below.			On the left side viewed from the load side. Regarding the draw out hole direction, refer to Table below.		
Lead Wiring	6 Wires	4P	6P	8 Wires	4P	
		0.1~3.7kW (Direct starting)	-		0.1~3.7kW (Direct starting)	
		Note: 2 5.5~55kW (⅄-Δ starting available)	Note: 2 15~55kW (⅄-Δ starting available)		Note: 2 5.5~37kW (⅄-Δ starting available)	
Standards	Conforms to IEC.					

Reducer

Items	Specifications		
Model	CYCLO 6000 Series		CYCLO 6000SK Series
Lubrication Method	Grease lubricated and oil lubricated models available		Grease lubricated models available
Speed Reduction Method	Internal planetary gear mechanism with trochoidal curved tooth profile		Involute gear type
Direction of Output Shaft Rotation	Single reduction	Clockwise rotation	Counter-clockwise rotation
	Double reduction	Counter-clockwise rotation	*Note that it is different from CYCLO 6000 series single reduction type
	As observed from the load side when connected to R-U, S-V, T-W motors.		

Common to Motor and Reducer

Items		Specifications
Ambient Conditions	Installation location	Indoor or outdoor (Minimal dust and humidity)
	Ambient Temperature	-10°C ~ 40°C
	Ambient Humidity	Under 85%
	Elevation	Lower than 1,000 meters above sea level
	Atmosphere	Well ventilated location, free of corrosive gases, explosive gases, vapors, and dust.
Method of Mounting Note: 3		CHHM Type: Slow speed shaft in horizontal direction and with foot CHFM Type: Slow speed shaft in horizontal direction and with flange (not for 6000SK Series) CVVM Type: Slow speed shaft down in vertical direction and with V-flange *Models with "N" for the second nomenclature symbol (such as CNHM Type) may by mounted in any direction.
Method of Coupling with Driven Machine		Coupling, gears, chain sprocket or belt.
Painting		Type: Acrylic modified phtalic Color: Equivalent to Munsell 6.5PB 3.6/8.2.

Note: 1. Refer to the technical section (Page F-31~57) for motor specification other than standard one.
2. Consult us when ⅄-Δ start is necessary for non-standard voltage.
3. Models for universal mounting (types with N for the second digit of nomenclature) can be manufactured for following frame sizes only. Other frame sizes require indication for mounting direction.

[Frame sizes for universal mounting direction] *□ of the frame size indicates 0, 5, or H.
606□, 607□, 608□, 609□, 610□, 611□, 612□,
606□DA, 607□DA, 608□DA, 609□DA, 610□DA, 612□DA, 612□DB

Direction of Withdrawing Lead Wire

Main frame mounting direction	Standard
Horizontal Type (Slow speed shaft in horizontal direction)	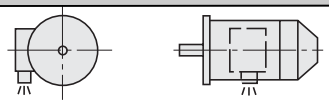
Vertical Type (Slow speed shaft in vertical direction)	

Note: Whenever not specified, the above direction shall be used. When the direction of withdrawal from the terminal box is other than specified above, refer to Page F-34.

Model Selection

Select models referring to the following flowchart. Consult us if there is any question.

Step 1: Determination of Operating Condition

Determine the following condition before starting selection.

- Application
- Continuous operation, or operation with frequent startup and stop
- Motor capacity (kW) and output speed or reduction ratio
- Radial load and axial load
- Operation hours per day
- Level of shock load
- Mounting direction (slow speed shaft direction), mounting shape
- Motor specification (power source frequency, voltage, with or without brake, etc.)
- Other ambient conditions (temperature, humidity, indoor or outdoor, and other environments)

* Refer to section "D. CYCLO® GEARMOTORS (WITH AF MOTOR FOR INVERTERS)" for gearmotors with inverter motors.

Step 2: Model Selection

Step 3: Check

Step 4: Nomenclature Determination, Selection Complete

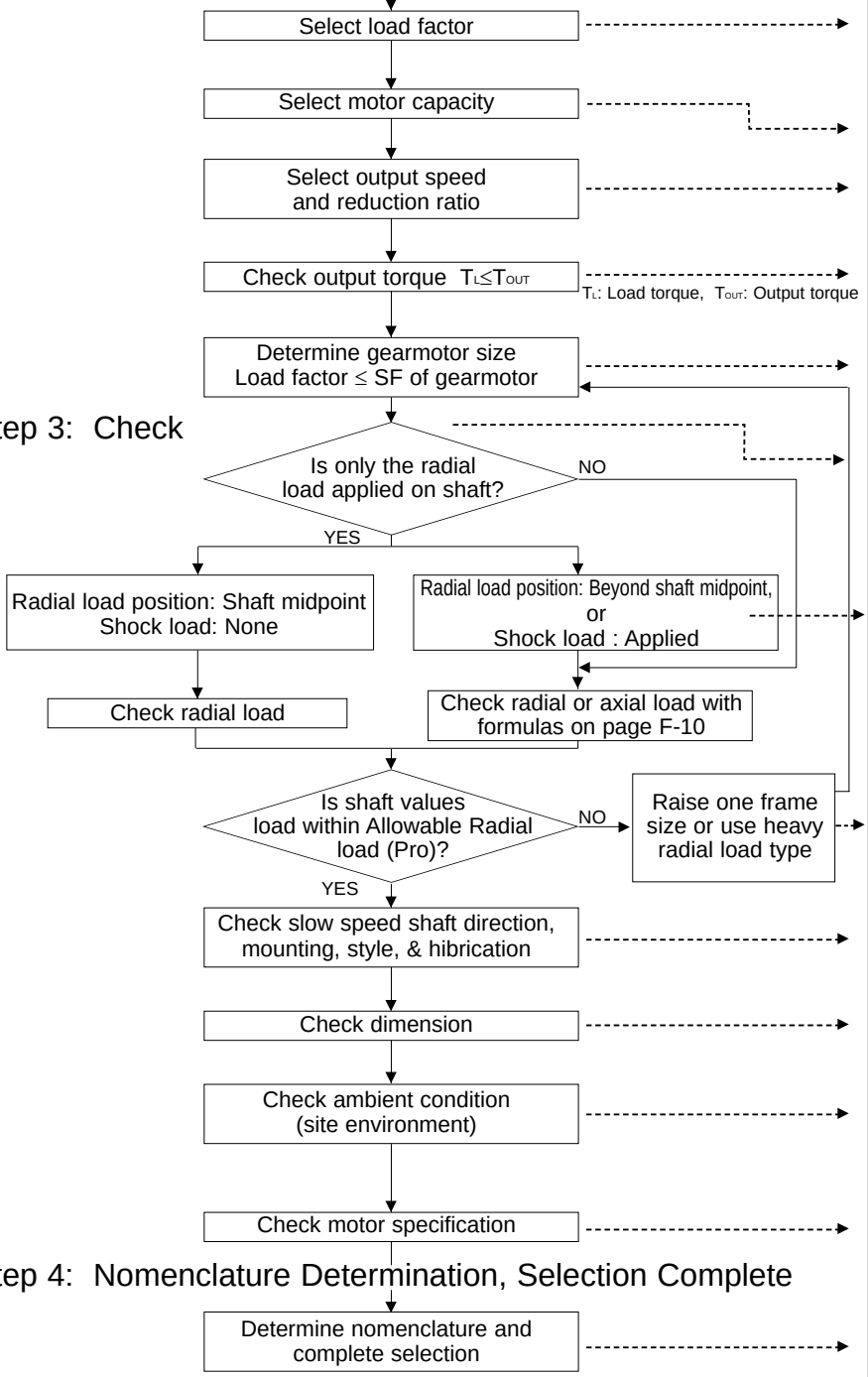

Procedure

- Select appropriate load factor from page B-7~8. Check allowable thermal capacity for motor in page B-9 if startup and stop is repeated during operation.
- Open the page with selection table for your motor capacity, starting from page B-13.
- Select the cell containing close value to your output speed or reduction ratio in the selection table.
- Check whether the output torque is sufficient for your usage. Raise motor capacity by one frame size if the output torque is not sufficient.
- Select combination with service factor (SF), which is larger than the load factor, from the selection table.
- Check whether only the radial load is applied on slow speed shaft. Refer to Technical Data starting at page F-10 and calculate if axial load is also applied.
- Refer to Technical Data starting at page F-10 depending on where the radial load is applied, or if any shock load is applied or not.
- *1 Allowable radial load for slow speed shaft in the selection table is when the load position is at the midpoint of the shaft.
  *2 Calculate radial load including initial tension if they are applied using chain, V-belt, synchronous belt, etc.
- Check whether the calculated radial load does not exceed allowable radial load of the slow speed shaft.
- Check whether the selected combination is sufficient for your slow speed shaft direction, mounting style, and lubrication method.
- Check whether the dimension is adequate. Consult us if it does not match your operation condition.
- Check whether the selected combination is sufficient for your operation condition, such as surrounding environment. Refer to "Standard Specifications of Gearmotor" in page B-3 or section "F. Technical Data" for checking.
- Check whether the selected motor is sufficient for your operation condition (power source, environment, thermal class, etc.).
- Determine nomenclature for selected model referring to "Nomenclature" in page B-10. Now, the selection process is complete.

Description of Our Selection Table

This is a brief desciption of our tables on page B-13 and after.

Motor capacity [kW]

Input speed [r/min] (Indicated for each motor frequency and number of poles.)

n_1: Motor Speed

7.5 kW	Hz	50Hz		60Hz	
	P	4	6	4	6
	n_1 r/min	1450	980	1750	1165

CHHM/CNHM

50Hz						60Hz						Nomenclature			
Output Speed n_2 [r/min]	Output Torque Tout [N-m]	[kgf-m]	Allowable Radial Load Pro [N]	[kgf]	SF	Output Speed n_2 [r/min]	Output Torque Tout [N-m]	[kgf-m]	Allowable Radial Load Pro [N]	[kgf]	SF	Input Capacity Symbol	- Frame Size	- Reduction Ratio	
			5980	**610**	**1.25**				**5650**	**576**	**1.25**	**10 -**	**6130**	**- 6**	**B**
			5980	610	1.51				5650	576	1.51	10 -	6135	- 6	B
242	282	28.7	9330	951	1.73	292	233	23.8	8830	901	1.73	10 -	6140	- 6	B
			9330	951	2.01				8830	901	2.01	10 -	6145	- 6	B
			10400	1070	2.71				9830	1000	2.71	10 -	6160	- 6	B
			6650	**678**	**1.25**				**6290**	**641**	**1.25**	**10 -**	**6130**	**- 8**	**B**
			6650	678	1.51				6290	641	1.51	10 -	6135	- 8	B
181	375	38.3	10300	1050	1.73	219	311	31.7	9790	998	1.73	10 -	6140	- 8	B
			10300	1050	2.01				9790	998	2.01	10 -	6145	- 8	B
			11700	1190	2.63				11000	1120	2.63	10 -	6160	- 8	B
			7570	**771**	**1.25**				**7150**	**729**	**1.25**	**10 -**	**6130**	**- 11**	**B**
			7570	771	1.51				7150	729	1.51	10 -	6135	- 11	B
132	516	52.6	11600	1180	1.73	159	428	43.6	11000	1120	1.73	10 -	6140	- 11	B
			11600	1180	2.01				11000	1120	2.01	10 -	6145	- 11	B
			13200	1350	2.63				12500	1270	2.63	10 -	6160	- 11	B
			7860	**801**	**1.25**				**7430**	**758**	**1.25**	**10 -**	**6130**	**- 13**	**B**
			7860	801	1.36				7430	758	1.51	10 -	6135	- 13	B

Output speed [r/min]

Service factor

Input capacity symbol - Frame size - Reduction ratio

*Note that “reduction ratio = normal ratio” for models with “SK” at the end of frame size (6000 SK Series with “*3” on the side of reduction ratio).
(Indicated reduction ratio is the same as actual reduction ratios for other models.)

Selection Example

Below is an example selection process following the model selection procedure in page B-4.

•Operation condition

- Application: Chain conveyor
- Operation hours per day: 24 hours/day
- Operation pattern: Continuous operation
- Load capacity: 0.7kW
- Output speed: 33.7r/min
- Connection with application:
  Chain sprocket
  Initial tension = 0
  Sprocket pitch circle radius: R=61mm
  Load position: Midpoint of shaft
- Level of shock load: None
- Mounting direction (slow speed shaft direction), and mounting style:
  horizontal, foot mount
- Motor specification
  Electric frequency: 50Hz
  Voltage: 200V
  Brake: None
  Others: Indoor type
- Surrounding condition
  Ambient temperature 20°C for indoor use

The model is selected based on above operation conditions in this example.

Operation condition, selection, and calculation results	Reference pages
• **Select load factor** Load condition for chain conveyor application → Uniform load (U) Load factor = 1.2 (U, 24 hours/day operation)	Page B-7~9 Table B-2: Reducer Load Classification Table B-1: Reducer Load Factor
• **Select motor capacity** Load capacity=0.7kW → Motor capacity=0.75kW	Page A-7: Product Range of Motor
• **Select output speed** Power source frequency 50Hz, output speed 33.7r/min → 1450/33.7 = Reduction ratio 43	Page B-38: CYCLO® GEARMOTORS Selection Tables
• **Check output torque** $T_L = \frac{9550 \times 0.7(kw)}{1450} \times 43 = 199\ N{\cdot}m \leq 202N{\cdot}m \rightarrow OK$ T_L=Load torque	Page B-38: CYCLO® GEARMOTORS Selection Tables
• **Determine reducer frame size** Load factor = 1.2 ≤ 1.44 Reducer frame size & reduction ratio: 1-6105-43	Page B-38: CYCLO® GEARMOTORS Selection Tables
• **Check radial load** Pr = TL/R ≤ Pro/Cf Pr = 199(N·m)/0.061(m) = 3262(N) ≤ 5400(N)/1 = 5400(N) → OK	Page F-10: Allowable Radial and Axial Load
• **Check slow speed shaft direction, mounting style, lubrication method** Slow speed shaft direction: Horizontal, Mounting style: Foot mount → Nomenclature: CNHM (Grease lubrication method)	Page B-38: CYCLO® GEARMOTORS Selection Tables
• **Check dimension** Check dimension using Dimension Tables.	Page B-10: Nomenclature Page B-101: Dimension Tables
• **Check surrounding condition** Ambient temperature: 20°C → OK	Page B-3: Standard Specifications of Gearmotor
• **Check motor specification** 200V, 50Hz, for indoor use → OK with standard specificationn	Page A-7: Product Range of Motor
■**Determine nomenclature** Determine nomenclature: CNHM1-6105-43 The selection is complete.	Page B-10: Nomenclature

Selection of Load Factor

The Load Factor is rated for the characteristics of the driven machine.

The tabulated ratings are based on a running time of 10 hours per day with uniform load.
For your reference, please see method (1) and (2) shown below.

(1) Recommended Load Factor by the Driven Application.

[Load Factor] U: Uniform load M: Moderate shock H: Heavy shock

Table B-1 Reducer Load Factor

Daily duty	~3 hours/day			~10 hours/day			~24 hours/day		
	U	M	H	U	M	H	U	M	H
Load Factor	0.80	1.00	1.35	1.00	1.20	1.50	1.20	1.35	1.60

Table B-2 Recommended Load Classifications

Type of APPLICATION	Type of LOAD
*Aerator	
Agitators.	
pure liquids	U
liquids & solids	M
liquids-variable density	M
Blowers	
centrifugal	U
lobe	M
vane	U
Brewing & Distilling	
bottling machinery	U
brew kettles, cont. duty	U
cookers-cont. duty	U
mash tubs-cont. duty	U
scale hopper, frequent starts	M
Can Filling Machines	U
*Cane Knives	M
Car Dumpers	H
Car Pullers	M
Clarifiers	U
Classifiers	M
Clay Working Machinery	
brick press	H
briquette machine	H
clay working machinery	M
pug mill	M
Compressors	
centrifugal	U
lobe	M
reciprocating, multi-cylinder	M
reciprocating, single-cylinder	H
Conveyors-Uniformly	
Loaded or Fed	
apron	U
assembly	U
belt	U
bucket	U
chain	U
flight	U
oven	U
screw	U
Conveyors-Heavy Duty	
Not Uniformly Fed	
apron	M
assembly	M
belt	M
bucket	M
chain	M
flight	M
*live roll	
oven	M
reciprocating	H
screw	M
shaker	H
Cranes (Except for Dry Dock Cranes)	
main hoists	
*bridge travel	
*trolley travel	
Crusher	
ore	H
stone	H
**sugar	M
Dredges	
cable reels	M
conveyors	M
cutter head drives	H
jig drives	H
maneuvering winches	M
pumps	M
screen drive	H
stackers	M
utility winches	M
*Dry Dock Cranes	
Elevators	
bucket - uniform load	U
bucket - heavy load	M
bucket - cont.	U
centrifugal discharge	U
escalators	U
freight	M
gravity discharge	U
*man lifts	
*passenger	
**Extruders (Plastics)	
blow molders	M
coating	U
film	U
pipe	U
pre-plasticizers	M
rods	U
sheet	U
tubing	U
Fans	
centrifugal	U
*cooling towers	
induced draft	U
*forced draft	
induced draft	M
large (mine, etc.)	M
large (industrial)	M
light (small diameter)	U
Feeders	
apron	M
belt	M
disc	U
reciprocating	H
screw	M
Food industry	
beet slicer	M
cereal cooker	U
dough mixer	M
meat grinders	M
Generators (not welding)	U
Hammer mills	H
Hoists	
heavy duty	H
medium duty	M
skip hoist	M
Laundry Washers	
reversing	M
Laundry Tumblers	M
Line Shaft	
driving processing equipment	M
light	U
other line shafts	U
Lumber Industry	
barkers-hydraulic-mechanical	H
burner conveyor	M
chain saw & drag saw	H
chain transfer	H
craneway transfer	H
de-barking drum	H
edger feed	M
gang feed	H
green chain	M
live rolls	H
log haul-locline	H
log haul-well type	H
log turning device	H
main log conveyor	H
off bearing rolls	M
planer feed chains	M
planer floor chains	M
planer tilting hoist	M
re-saw merry- go-round conveyor	M
roll cases	H
slab conveyor	H
small waste-conveyor-belt	U
small waste-conveyor-chain	M
sorting table	M
tipple hoist conveyor	M
tipple hoist drive	M
transfer conveyors	M
transfer rolls	M
tray drive	M
trimmer feed	M
waste conveyor	M
Machine Tools	
bending roll	M
punch press-gear driven	H
*notching press-belt driven	
plate planers	H
tapping machine	H
other machine tools	
main drives	M
auxiliary drives	U
Metal Mills	
draw bench carriage & main drive	M
forming machines	H
*pinch, dryer & scrubber rolls, reversing	
slitters	M
table conveyors-non-reversing group drives	M
individual drives	H
*table conveyors-reversing	
wire drawing & flattening machine	M
wire winding machine	M
Mills, Rotary Type	
**ball	M
**cement kilns	M
**dryers & coolers	M
kilns	M
**pebble	M
**rod , plain & wedge bar	M
tumbling barrels	H
Mixers	
concrete mixers, cont.	M
concrete mixers, intermittent	M
constant density	U
variable density	M
Oil Industry	
chillers	M
*oil well pumping	
paraffin filter press	M
rotary kilns	M
Paper Mills	
agitators (mixers)	M
barker-auxiliaries-hydraulic	M
barker-mechanical	M
barking drum	H
beater & pulper	M
bleacher	U
calendars	M
calendars-super	H
converting machine, except cutters, platers	M
conveyors	U
couch	M
cutters-platers	H
cylinders	M
dryers	M
Paper Mills	
felt stretcher	M
felt whipper	H
jordans	H
log haul	H
presses	U
pulp machine reel	M
stock chests	M
suction roll	U
washers & thickeners	M
winders	U
*Printing Presses	
Pullers	
barge haul	H
Pumps	
centrifugal	U
proportioning	M
reciprocating single acting, 3 or more cylinders	M
double acting, 2 or more cylinders	M
*single acting, 1 or 2 cylinders	
*double acting, single cylinder	
rotary-gear type	U
rotary-lobe, vane	U
Rubber & Plastics Industries	
**crackers	H
laboratory equipment	M
**mixing mills	H
**refiners	M
**rubber calendars	M
**rubber mill (2 on line)	M
**rubber mill (3 on line)	U
**sheeter	M
*tire building machines	
*tire & tube press openers	
**tubers & strainers	M
**warming mills	M
Sand Muller	M
Screens	
air washing	U
rotary-stone or gravel	M
traveling water intake	U
Sewage Disposal Equipment	
bar screens	U
chemical feeders	U
collectors, circuline or straightline	U
dewatering screws	M
grit collectors	U
scum breakers	M
slow or rapid mixers	M
sludge collectors	U
thickeners	M
vacuum filters	M
Slab Pushers	M
*Steering Gear	
Stokers	U
Sugar Industry	
**cane knives	M
**crushers	M
**mills	H
Textile Industry	
batchers	M
calendars	M
cards	M
dry cans.	M
dryers	M
dyeing machinery	M
*knitting machines	
looms	M
mangles	M
nappers	M
pads	M
*range drives	
slashers	M
soapers	M
spinners	M
tenter frames	M
washers	M
winders	M
*Windlass	

Remarks: * Refer to factory. ** To be selected on basis of 24hr. service only.

Note: Table above contains reference value. Names and mechanical characteristics of the actual machine may differ from the table above.

Selection of Load Factor

(2) Recommended Load Factor Modifications for Frequent Start-Stop Operation

Please see table B-3 and B-4.

Table B-3 Number of Starts-Stops and Load Factor

Number of starts-stops [times/hour]	~3 hours/day			~10 hours/day			~24 hours/day		
	I	II	III	I	II	III	I	II	III
~10	0.80	1.00	1.20	1.00	1.10	1.35	1.20	1.25	1.50
~200	0.85	1.10	1.30	1.10	1.30	1.50	1.25	1.50	1.65
~500	0.90	1.20	1.40	1.15	1.45	1.60	1.30	1.60	1.75

$$\text{The ratio of Moment of Inertia (The ratio of GD}^2\text{)} = \frac{\text{Total Moment of Inertia (GD}^2\text{) as seen from the motor shaft}}{\text{Moment of Inertia (GD}^2\text{) of motor}}$$

Load Factor
1: Allowable ratio of Moment of Inertia (GD^2) ≤ 0.3
2: Allowable ratio of Moment of Inertia (GD^2) ≤ 3
3: Allowable ratio of Moment of Inertia (GD^2) ≤ 10

Note: 1. The number of starts-stops includes brake or clutch operation times.
2. Consult us when starting under loaded conditions.
3. Consult us when start-stop frequency exceeds 500 times/hour. Brake for high frequency use may be necessary.

Table B-4 MOTOR THERMAL RATING (C × Z)

Motor Power [kW]	Allowable C × Z				Motor moment of inertia kg·m²		Motor GD² kgf·m²	
	(35%ED)	(35%ED~50%ED)	(50%ED~80%ED)	(80%ED~100%ED)	Standard	With brake	Standard	With brake
0.1	3200	3000	2000	1200	0.00033	0.00035	0.0013	0.0014
0.2	2200	2800	2800	2500	0.00050	0.00055	0.002	0.0022
0.25	2200	2800	2800	2500	0.00050	0.00055	0.002	0.0022
0.4	1800	2200	1500	1500	0.00065	0.00068	0.0026	0.0027
0.55	1800	2200	1500	1500	0.00101	0.00111	0.00405	0.00445
0.75	1400	1400	800	500	0.00120	0.00130	0.0048	0.0052
1.1	1400	1400	800	500	0.00185	0.00208	0.0074	0.0083
1.5	1200	1200	500	400	0.00213	0.00235	0.0085	0.0094
2.2	1000	900	400	200	0.00333	0.00373	0.0133	0.0149
3.0	1000	900	400	200	0.00700	0.00810	0.0281	0.0325
3.7	800	800	800	700	0.00848	0.00958	0.0339	0.0383
5.5	300	300	200	150	0.01143	0.01253	0.0457	0.0501
7.5	400	350	300	300	0.02675	0.03025	0.1070	0.121
11	200	200	150	150	0.03750	0.04100	0.1500	0.164

C × Z calculated by below steps (1) ~ (3) must be less than allowable C × Z listed in Table B-4.

(1) Caluculate C from formula below.

[SI units] $$C = \frac{J_M + J_L}{J_M}$$

J_M; Moment of inertia of motor [kg·m²]
J_L; Total moment of inertia (excluding motor) at motor shaft [kg·m²]

[Gravitational units] $$C = \frac{GD_M^2 + GD_L^2}{GD_M^2}$$

GD_M^2; GD^2 of motor [kgf·m²]
GD_L^2; Total GD^2 (excluding motor) at motor shaft [kgf·m²]

Continues to the next page.

Selection of Load Factor

(2) Caluculate Z (number of startup times/hour).

(a) Assume that one operating period consists of "on time t_a [sec]" and "off time t_b [sec]" and the motor is started n_r [times/cycle].

$$Z_r = \frac{3600n_r}{t_a + t_b} \quad \text{[times/hr]}$$

(b) When inching, ni [times/cycle] is included in 1 cycle (t_a+t_b), the number of inching times per hour Z_i, and then included in the number of starts.

$$Z_i = \frac{3600n_r}{t_a + t_b} \quad \text{[times/hr]}$$

(c) Calculate Z [times/hr] by (a) and (b).

$$Z = Z_r + \frac{1}{2}Z_r = \frac{3600n_r}{t_a + t_b} \cdot (n_r + \frac{1}{2}n_i) \quad \text{[times/hr]}$$

(3) Calculate C multiplied by Z.

Use the C obtained in step (1) and Z in step (2).

(4) Obtain the duty cycle %ED and check with table above.

$$\%ED = \frac{t_a}{t_a + t_b} \times 100$$

Nomenclatue

Slow Speed Shaft Direction	
Horizontal, slow speed shaft level	H
Vertical, slow speed shaft down	V
Verticaly, slow speed shaft up	W
Universal mounting	N

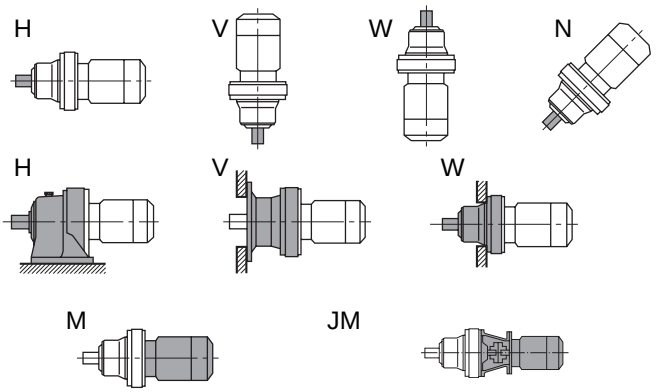

Mounting style	
Foot	H
V flange	V
Flange	F

Type of Input	
Gearmotor	M
With adaptor	JM

Special Specifications	
Standard specification	blank
Special specification	S

Motor Capacity Symbol

4P	Capacity symbol	01	02	03	05	08	1
	kW (HP)	0.1 (1/8)	0.2 (1/4)	0.25 (1/3)	0.4 (1/2)	0.55 (3/4)	0.75 (1)
	Capacity symbol	1H	2	3	4	5	8
	kW (HP)	1.1 (1.5)	1.5 (2)	2.2 (3)	3.0 (4)	3.7 (5)	5.5 (7.5)
	Capacity symbol	10	15	20	25	30	40
	kW (HP)	7.5 (10)	11 (15)	15 (20)	18.5 (25)	22 (30)	30 (40)
	Capacity symbol	50	60	75	100		
	kW (HP)	37 (50)	45 (60)	55 (75)	75 (100)		
6P	Capacity symbol	016	026	036	056	086	16
	kW (HP)	0.1 (1/8)	0.2 (1/4)	0.25 (1/3)	0.4 (1/2)	0.55 (3/4)	0.75 (1)
	Capacity symbol	1H6	26	36	46	56	86
	kW (HP)	1.1 (1.5)	1.5 (2)	2.2 (3)	3.0 (4)	3.7 (5)	5.5 (7.5)
	Capacity symbol	106	156	206	256	306	406
	kW (HP)	7.5 (10)	11 (15)	15 (20)	18.5 (25)	22 (30)	30 (40)
	Capacity symbol	506	606	756	1006	1256	1506
	kW (HP)	37 (50)	45 (60)	55 (75)	75 (100)	90 (125)	110 (150)
	Capacity symbol	1756					
	kW (HP)	132 (175)					

Shaft specification	
Metric JIS (Standard)	-
Inch size	Y
Metric DIN	G

Suffix			
Standard	-	Low Backlash	LB
High Capacity Bearing	R1	With AF (inverter) motor	AV
High Cap. Brg. Ductile Casing	R2	Servo Motor	SV
Baseplate	BP	DC Motor	DV
HH Type Ceiling	H1	High Efficency Motor	ES
Modification Left Wall	H2	Torque Limiter	TL
Modification Right Wall	H3		

Frame size (Refer to Selection Tables starting from page B-13.)

With or Without Brake	
Without brake	-
With brake	B

Nominal ratio

C	N	H	M		1	—	6105		—		—		—	51

- Motor capacity symbol
- Special specification symbol
- Type of input
- Mounting style
- Slow speed shaft direction
- CYCLO DRIVE (C)
- Frame size
- Shaft specification
- Suffix
- With or Without brake
- Reduction ratio

Nomenclature and Product Examples

Nomenclature Examples (Gearmotor)

Example 1.
CNHM2 - 6115 - 29

C:	Model	- CYCLO® DRIVE
N:	Slow speed shaft direction	- Universal direction
H:	Mounting style	- Foot
M:	Type of input	- Gearmotor type
2:	Motor capacity	- 1.5kW
6115:	Frame size	- 6115
29:	Reduction ratio	- 29

Example 2.
CVVM5 - 6195DA - B - 377

C:	Model	- CYCLO® DRIVE
V:	Slow speed shaft direction	- Vertical mounting
V:	Mounting style	- V flange
M:	Type of input	- Gearmotor type
5:	Motor capacity	- 3.7kW
6195DA:	Frame size	- 6115
B:	Brake	- With brake
377:	Reduction ratio	- 377

Product and Nomenclature Symbol Examples (Gearmotor)

Standard and various application products of CYCLO® GEARMOTOR are classified by their nomenclature symbol as below.
Refer to specific catalogs or consult us for details on our application products.

CYCLO® GEARMOTOR

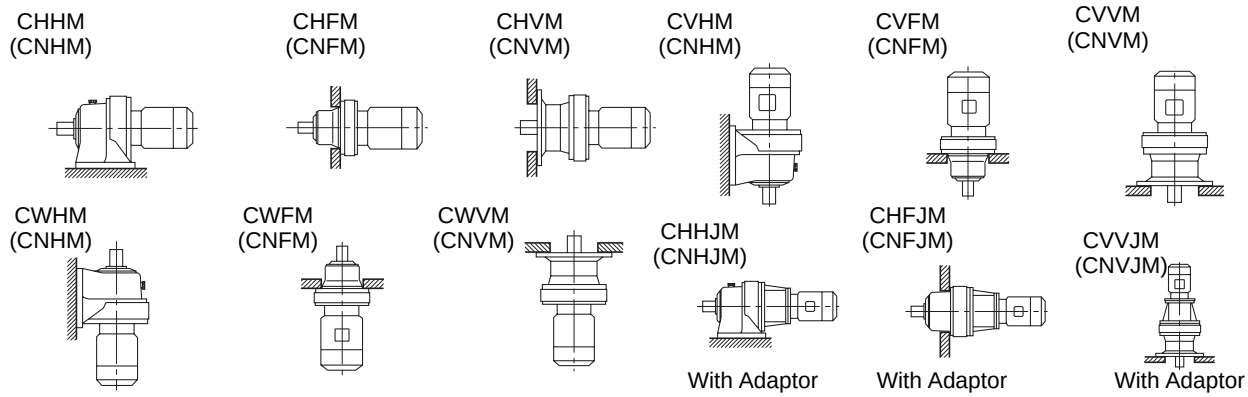

CYCLO® GEARMOTOR Application Products

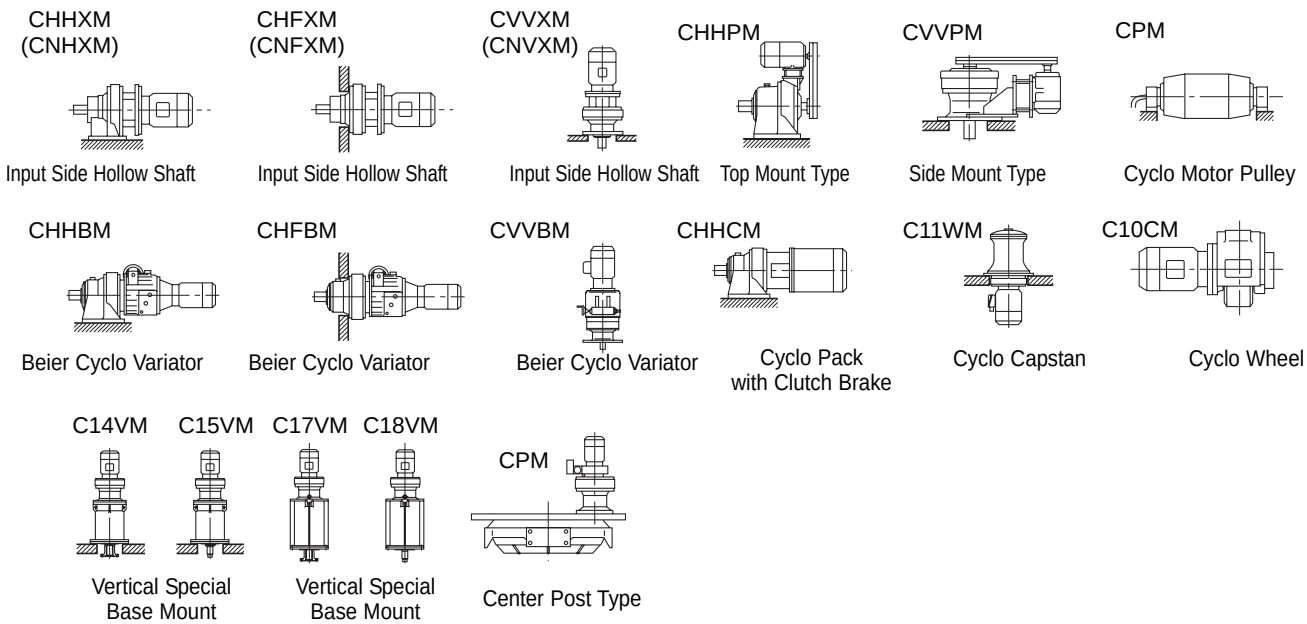

M E M O

B CYCLO® GEARMOTORS

2. Selection Tables

Selection Tables Gearmotors

n_1: Motor Speed

0.1 kW	Hz		50Hz		60Hz	
	P		4	6	4	6
	n_1	r/min	1450	980	1750	1165

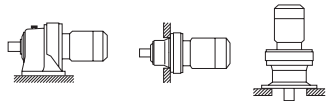

CHHM/CNHM CHFM/CNFM CVVM/CNVM

50Hz						60Hz						Nomenclature				Page of Dimension Sheet		
Output Speed n_2 [r/min]	Output Torque Tout [N·m]	[kgf·m]	Allowable Radial Load Pro [N]	[kgf]	SF	Output Speed n_2 [r/min]	Output Torque Tout [N·m]	[kgf·m]	Allowable Radial Load Pro [N]	[kgf]	SF	Input Capacity Symbol	-	Frame Size	- Reduction Ratio	CNHM CHHM	CNFM CHFM	CNVM CVVM
242	3.75	0.383	804	82.0	2.00	292	3.11	0.317	756	77.1	2.00	01	-	6060	- 6	B-100	B-116	B-135
			804	82.0	2.86				756	77.1	2.86	01	-	6065	- 6	B-100	B-116	B-135
181	5.01	0.510	921	94	2.00	219	4.15	0.423	866	88	2.00	01	-	6060	- 8	B-100	B-116	B-135
			921	94	2.86				866	88	2.86	01	-	6065	- 8	B-100	B-116	B-135
132	6.88	0.702	1180	120	2.00	159	5.70	0.581	1180	120	2.00	01	-	6060	- 11	B-100	B-116	B-135
			1180	120	2.86				1180	120	2.86	01	-	6065	- 11	B-100	B-116	B-135
112	8.1	0.83	1180	120	2.00	135	6.7	0.69	1180	120	2.00	01	-	6060	- 13	B-100	B-116	B-135
			1180	120	2.86				1180	120	2.86	01	-	6065	- 13	B-100	B-116	B-135
96.7	9.4	0.96	1180	120	2.00	117	7.8	0.79	1180	120	2.00	01	-	6060	- 15	B-100	B-116	B-135
			1180	120	2.86				1180	120	2.86	01	-	6065	- 15	B-100	B-116	B-135
85.3	10.6	1.08	1180	120	2.00	103	8.8	0.90	1180	120	2.00	01	-	6060	- 17	B-100	B-116	B-135
			1180	120	2.82				1180	120	2.86	01	-	6065	- 17	B-100	B-116	B-135
69.0	13.1	1.34	1180	120	1.83	83.3	10.9	1.11	1180	120	2.00	01	-	6060	- 21	B-100	B-116	B-135
			1180	120	2.28				1180	120	2.34	01	-	6065	- 21	B-100	B-116	B-135
58.0	15.6	1.59	**1180**	**120**	**1.10**	70.0	13.0	1.32	**1180**	**120**	**1.10**	**01**	**-**	**6060**	**- 25**	**B-100**	**B-116**	**B-135**
			1180	120	1.66				1180	120	1.66	01	-	6065	- 25	B-100	B-116	B-135
			1770	180	2.30				1770	180	2.30	01	-	6070	- 25	B-100	B-116	B-135
			1770	180	2.94				1770	180	2.94	01	-	6075	- 25	B-100	B-116	B-135
50.0	18.1	1.85	**1180**	**120**	**1.10**	60.3	15.0	1.53	**1180**	**120**	**1.10**	**01**	**-**	**6060**	**- 29**	**B-100**	**B-116**	**B-135**
			1180	120	1.65				1180	120	1.66	01	-	6065	- 29	B-100	B-116	B-135
			1770	180	2.26				1770	180	2.26	01	-	6070	- 29	B-100	B-116	B-135
			1770	180	2.86				1770	180	2.86	01	-	6075	- 29	B-100	B-116	B-135
41.4	21.9	2.23	**1180**	**120**	**1.10**	50.0	18.1	1.85	**1180**	**120**	**1.10**	**01**	**-**	**6060**	**- 35**	**B-100**	**B-116**	**B-135**
			1180	120	1.37				1180	120	1.43	01	-	6065	- 35	B-100	B-116	B-135
			1770	180	2.05				1770	180	2.11	01	-	6070	- 35	B-100	B-116	B-135
			1770	180	2.72				1770	180	2.79	01	-	6075	- 35	B-100	B-116	B-135
			2560	261	2.90				2560	261	3.29	01	-	6080	- 35	B-100	B-116	B-135
33.7	26.9	2.74	**1180**	**120**	**1.12**	40.7	22.3	2.27	**1180**	**120**	**1.13**	**01**	**-**	**6065**	**- 43**	**B-100**	**B-116**	**B-135**
			1770	180	1.67				1770	180	1.70	01	-	6070	- 43	B-100	B-116	B-135
			1770	180	2.23				1770	180	2.26	01	-	6075	- 43	B-100	B-116	B-135
			2560	261	2.50				2560	261	2.50	01	-	6080	- 43	B-100	B-116	B-135
			2560	261	2.94				2560	261	2.94	01	-	6085	- 43	B-100	B-116	B-135
28.4	31.9	3.25	**1770**	**180**	**1.00**	34.3	26.4	2.70	**1770**	**180**	**1.00**	**01**	**-**	**6070**	**- 51**	**B-100**	**B-116**	**B-135**
			1770	180	1.43				1770	180	1.43	01	-	6075	- 51	B-100	B-116	B-135
			2560	261	1.92				2560	261	1.92	01	-	6080	- 51	B-100	B-116	B-135
			2560	261	2.41				2560	261	2.41	01	-	6085	- 51	B-100	B-116	B-135
24.6	36.9	3.76	**1770**	**180**	**1.00**	30.0	30.6	3.12	**1770**	**180**	**1.00**	**01**	**-**	**6070**	**- 59**	**B-100**	**B-116**	**B-135**
			1770	180	1.36				1770	180	1.36	01	-	6075	- 59	B-100	B-116	B-135
			2560	261	1.85				2560	261	1.85	01	-	6080	- 59	B-100	B-116	B-135
			2560	261	2.34				2560	261	2.34	01	-	6085	- 59	B-100	B-116	B-135
20.4	44.4	4.53	**2560**	**261**	**1.20**	24.6	36.8	3.75	**2560**	**261**	**1.20**	**01**	**-**	**6080**	**- 71**	**B-100**	**B-116**	**B-135**
			2560	261	1.65				2560	261	1.87	01	-	6085	- 71	B-100	B-116	B-135
			3340	340	2.52				3340	340	2.52	01	-	6090	- 71	B-100	B-116	B-135
			3340	340	2.78				3340	340	3.01	01	-	6095	- 71	B-100	B-116	B-135
16.7	54.4	5.55	**2560**	**261**	**1.21**	20.0	45.10	4.600	**2560**	**261**	**1.21**	**01**	**-**	**6085**	**- 87**	**B-100**	**B-116**	**B-135**
			3340	340	2.11				3340	340	2.11	01	-	6090	- 87	B-100	B-116	B-135
			3340	340	2.63				3340	340	3.01	01	-	6095	- 87	B-100	B-116	B-135
13.9	24.0	2.45	1180	120	*1	16.8	24.0	2.45	1180	120	*1	01	-	6060DA	- 104	B-108	B-124	B-143
	30.0	3.06	1180	120	*1		30.0	3.06	1180	120	*1	01	-	6065DA	- 104	B-108	B-124	B-143
	45.0	4.59	1770	180	*1		45.0	4.59	1770	180	*1	01	-	6070DA	- 104	B-108	B-124	B-143
			1770	180	0.97				1770	180	1.17	01	-	6075DA	- 104	B-108	B-124	B-143
	61.6	6.28	3340	340	2.43		51.1	5.21	3340	340	2.94	01	-	6090DA	- 104	B-108	B-124	B-143
			3340	340	2.93				3340	340	3.54	01	-	6095DA	- 104	B-108	B-124	B-143

1. Combinations in **bold** are the recommended models for operations for 10 hours/day with uniform load (service factor is about 1.0 for motor rating at 50Hz).
2. Motor slippage may affect n_1 and n_2. Refer to technical data for details.
3. CNHM, CHHM, CNFM, CHFM, CNVM, and CVVM indicate types. Refer to page B-10 for details.
4. Lubrication method is different for each model. Refer to "Lubrication" section in page F-4~F-5 for details.
5. "6" at the end of "input capacity symbol" indicates models with 6P motor. Other models come with 4P motor.

Selection Tables Gearmotors

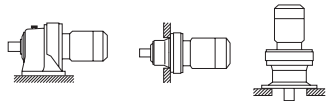

CHHM/CNHM CHFM/CNFM CVVM/CNVM

n_1: Motor Speed

0.1 kW	Hz	50Hz		60Hz	
	P	4	6	4	6
	n_1 r/min	1450	980	1750	1165

50Hz						60Hz						Nomenclature				Page of Dimension Sheet		
Output Speed n_2 [r/min]	Output Torque Tout [N·m]	[kgf·m]	Allowable Radial Load Pro [N]	[kgf]	SF	Output Speed n_2 [r/min]	Output Torque Tout [N·m]	[kgf·m]	Allowable Radial Load Pro [N]	[kgf]	SF	Input Capacity Symbol	- Frame Size	- Reduction Ratio		CNHM CHHM	CNFM CHFM	CNVM CVVM
12.2	74.5	7.59	**3340**	**340**	**1.25**	14.7	61.7	6.29	**3340**	**340**	**1.25**	**01 -**	**6090**	**- 119**		**B-100**	**B-116**	**B-135**
			3340	340	1.45				3340	340	1.51	01 -	6095	- 119		B-100	B-116	B-135
12.0	24.0	2.45	1180	120	*1	14.5	24.0	2.45	1180	120	*1	01 -	6060DA	- 121		B-108	B-124	B-143
	30.0	3.06	1140	116	*1		30.0	3.06	1140	116	*1	01 -	6065DA	- 121		B-108	B-124	B-143
	45.0	4.59	1770	180	*1		45.0	4.59	1770	180	*1	01 -	6070DA	- 121		B-108	B-124	B-143
	50.8	5.18	1770	180	*1		50.8	5.18	1770	180	*1	01 -	6075DA	- 121		B-108	B-124	B-143
	71.7	7.31	3340	340	2.09		59.4	6.06	3340	340	2.52	01 -	6090DA	- 121		B-108	B-124	B-143
			3340	340	2.24				3340	340	2.70	01 -	6095DA	- 121		B-108	B-124	B-143
10.1	24.0	2.45	1180	120	*1	12.2	24.0	2.45	1180	120	*1	01 -	6060DA	- 143		B-108	B-124	B-143
	30.0	3.06	1180	120	*1		30.0	3.06	1180	120	*1	01 -	6065DA	- 143		B-108	B-124	B-143
	45.0	4.59	1770	180	*1		45.0	4.59	1770	180	*1	01 -	6070DA	- 143		B-108	B-124	B-143
	60.0	6.12	1770	180	*1		60.0	6.12	1770	180	*1	01 -	6075DA	- 143		B-108	B-124	B-143
	84.8	8.64	3340	340	1.77		70.2	7.16	3340	340	2.14	01 -	6090DA	- 143		B-108	B-124	B-143
			3340	340	2.16				3340	340	2.61	01 -	6095DA	- 143		B-108	B-124	B-143
			5400	550	2.95				5400	550	3.56	01 -	6100DA	- 143		B-108	B-124	B-143
8.79	24.0	2.45	1180	120	*1	10.6	24.0	2.45	1180	120	*1	01 -	6060DA	- 165		B-108	B-124	B-143
	30.0	3.06	1180	120	*1		30.0	3.06	1180	120	*1	01 -	6065DA	- 165		B-108	B-124	B-143
	45.0	4.59	1770	180	*1		45.0	4.59	1770	180	*1	01 -	6070DA	- 165		B-108	B-124	B-143
	60.0	6.12	1770	180	*1		60.0	6.12	1770	180	*1	01 -	6075DA	- 165		B-108	B-124	B-143
	97.8	9.97	3340	340	1.53		81.0	8.26	3340	340	1.85	01 -	6090DA	- 165		B-108	B-124	B-143
			3340	340	2.04				3340	340	2.47	01 -	6095DA	- 165		B-108	B-124	B-143
			5400	550	2.56				5400	550	3.08	01 -	6100DA	- 165		B-108	B-124	B-143
7.44	24.0	2.45	1180	120	*1	8.97	24.0	2.45	1180	120	*1	01 -	6060DA	- 195		B-108	B-124	B-143
	30.0	3.06	1180	120	*1		30.0	3.06	1180	120	*1	01 -	6065DA	- 195		B-108	B-124	B-143
	45.0	4.59	1770	180	*1		45.0	4.59	1770	180	*1	01 -	6070DA	- 195		B-108	B-124	B-143
	60.0	6.12	1770	180	*1		60.0	6.12	1770	180	*1	01 -	6075DA	- 195		B-108	B-124	B-143
	116	11.8	3340	340	1.30		95.8	9.76	3340	340	1.57	01 -	6090DA	- 195		B-108	B-124	B-143
			3340	340	1.73				3340	340	2.09	01 -	6095DA	- 195		B-108	B-124	B-143
			5400	550	2.16				5400	550	2.61	01 -	6100DA	- 195		B-108	B-124	B-143
			5400	550	2.60				5400	550	3.13	01 -	6105DA	- 195		B-108	B-124	B-143
6.28	24.0	2.45	1180	120	*1	7.58	24.0	2.45	1180	120	*1	01 -	6060DA	- 231		B-108	B-124	B-143
	30.0	3.06	1180	120	*1		30.0	3.06	1180	120	*1	01 -	6065DA	- 231		B-108	B-124	B-143
	45.0	4.59	1770	180	*1		45.0	4.59	1770	180	*1	01 -	6070DA	- 231		B-108	B-124	B-143
	60.0	6.12	1770	180	*1		60.0	6.12	1770	180	*1	01 -	6075DA	- 231		B-108	B-124	B-143
	137	14.0	3340	340	1.10		113	11.6	3340	340	1.32	01 -	6090DA	- 231		B-108	B-124	B-143
			3340	340	1.46				3340	340	1.76	01 -	6095DA	- 231		B-108	B-124	B-143
			5400	550	1.83				5400	550	2.20	01 -	6100DA	- 231		B-108	B-124	B-143
			5400	550	2.19				5400	550	2.64	01 -	6105DA	- 231		B-108	B-124	B-143
5.31	24.0	2.45	1180	120	*1	6.41	24.0	2.45	1180	120	*1	01 -	6060DA	- 273		B-108	B-124	B-143
	30.0	3.06	1180	120	*1		30.0	3.06	1180	120	*1	01 -	6065DA	- 273		B-108	B-124	B-143
	45.0	4.59	1770	180	*1		45.0	4.59	1770	180	*1	01 -	6070DA	- 273		B-108	B-124	B-143
	60.0	6.12	1770	180	*1		60.0	6.12	1770	180	*1	01 -	6075DA	- 273		B-108	B-124	B-143
	162	16.5	3340	340	1.24		134	13.7	3340	340	1.49	01 -	6095DA	- 273		B-108	B-124	B-143
			5400	550	1.54				5400	550	1.86	01 -	6100DA	- 273		B-108	B-124	B-143
			5400	550	1.85				5400	550	2.24	01 -	6105DA	- 273		B-108	B-124	B-143

6. "*2" indicate models manufactured with reducer and motor separately mounted on a common baseplate (horizontal shaft direction) or on an adaptor (vertical shaft direction). Consult us for details, including dimensions.
7. Allowable radial load (Pro) is the value at the midpoint of the slow speed shaft.
8. "*3" indicate models with reduction ratios equal to nominal ratio. Refer to Table A-3 "6000SK Series (Actual Reduction Ratio)" on page A-4 for actual reduction ratio. Indicated reduction ratio is the same as actual reduction ratio for other models.
9. Maintain torque load during operation within "Output torque" in the table for models with "*1" in the SF column. They cannot be operated with 100% motor rating.

Selection Tables Gearmotors

n1: Motor Speed

0.1 kW	Hz	50Hz		60Hz	
	P	4	6	4	6
	n_1 r/min	1450	980	1750	1165

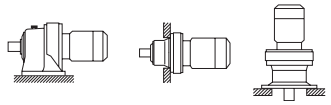

CHHM/CNHM CHFM/CNFM CVVM/CNVM

50Hz						60Hz						Nomenclature				Page of Dimension Sheet		
Output Speed n_2 [r/min]	Output Torque Tout [N·m]	[kgf·m]	Allowable Radial Load Pro [N]	[kgf]	SF	Output Speed n_2 [r/min]	Output Torque Tout [N·m]	[kgf·m]	Allowable Radial Load Pro [N]	[kgf]	SF	Input Capacity Symbol	-	Frame Size	- Reduction Ratio	CNHM CHHM	CNFM CHFM	CNVM CVVM
	24.0	2.45	1180	120	*1		24.0	2.45	1180	120	*1	01 -		6060DA	- 319	B-108	B-124	B-143
	30.0	3.06	1180	120	*1		30.0	3.06	1180	120	*1	01 -		6065DA	- 319	B-108	B-124	B-143
	45.0	4.59	1770	180	*1		45.0	4.59	1770	180	*1	01 -		6070DA	- 319	B-108	B-124	B-143
	60.0	6.12	1770	180	*1		60.0	6.12	1770	180	*1	01 -		6075DA	- 319	B-108	B-124	B-143
4.55	150	15.3	3290	336	*1	5.49	150	15.3	3290	336	*1	01 -		6090DA	- 319	B-108	B-124	B-143
			3220	**328**	**1.06**				**3280**	**334**	**1.28**	**01 -**		**6095DA**	**- 319**	**B-108**	**B-124**	**B-143**
	189	19.3	5400	550	1.32		157	16.0	5400	550	1.60	01 -		6100DA	- 319	B-108	B-124	B-143
			5400	550	1.59				5400	550	1.91	01 -		6105DA	- 319	B-108	B-124	B-143
			9810	1000	2.75				9810	1000	3.32	01 -		6120DA	- 319	B-108	B-124	B-143
	24.0	2.45	1180	120	*1		24.0	2.45	1180	120	*1	01 -		6060DA	- 377	B-108	B-124	B-143
	30.0	3.06	1180	120	*1		30.0	3.06	1180	120	*1	01 -		6065DA	- 377	B-108	B-124	B-143
	45.0	4.59	1770	180	*1		45.0	4.59	1770	180	*1	01 -		6070DA	- 377	B-108	B-124	B-143
	60.0	6.12	1770	180	*1		60.0	6.12	1770	180	*1	01 -		6075DA	- 377	B-108	B-124	B-143
	150	15.3	3290	336	*1		150	15.3	3290	336	*1	01 -		6090DA	- 377	B-108	B-124	B-143
3.85			3150	321	0.89	4.64			3230	329	1.08	01 -		6095DA	- 377	B-108	B-124	B-143
			5400	550	1.12				5400	550	1.35	01 -		6100DA	- 377	B-108	B-124	B-143
	223	22.8	5400	550	1.34		185	18.9	5400	550	1.62	01 -		6105DA	- 377	B-108	B-124	B-143
			9810	1000	2.33				9810	1000	2.81	01 -		6120DA	- 377	B-108	B-124	B-143
			9810	1000	2.33				9810	1000	2.81	01 -		6120DB	- 377	B-108	B-124	B-143
			9810	1000	2.82				9810	1000	3.40	01 -		6125DA	- 377	B-108	B-124	B-143
	24.0	2.45	1180	120	*1		24.0	2.45	1180	120	*1	01 -		6060DA	- 473	B-108	B-124	B-143
	30.0	3.06	1180	120	*1		30.0	3.06	1180	120	*1	01 -		6065DA	- 473	B-108	B-124	B-143
	45.0	4.59	1770	180	*1		45.0	4.59	1770	180	*1	01 -		6070DA	- 473	B-108	B-124	B-143
	60.0	6.12	1660	169	*1		60.0	6.12	1660	169	*1	01 -		6075DA	- 473	B-108	B-124	B-143
3.07	150	15.3	3310	338	*1	3.70	150	15.3	3310	338	*1	01 -		6090DA	- 473	B-108	B-124	B-143
	200	20.4	3220	328	*1		200	20.4	3220	328	*1	01 -		6095DA	- 473	B-108	B-124	B-143
			5400	**550**	**1.07**				**5400**	**550**	**1.29**	**01 -**		**6105DA**	**- 473**	**B-108**	**B-124**	**B-143**
	280	28.6	9810	1000	1.87		232	23.7	9810	1000	2.26	01 -		6120DA	- 473	B-108	B-124	B-143
			9810	1000	2.25				9810	1000	2.71	01 -		6125DA	- 473	B-108	B-124	B-143
	24.0	2.45	1180	120	*1		24.0	2.45	1180	120	*1	01 -		6060DA	- 559	B-108	B-124	B-143
	30.0	3.06	1180	120	*1		30.0	3.06	1180	120	*1	01 -		6065DA	- 559	B-108	B-124	B-143
	45.0	4.59	1770	180	*1		45.0	4.59	1770	180	*1	01 -		6070DA	- 559	B-108	B-124	B-143
	60.0	6.12	1660	169	*1		60.0	6.12	1660	169	*1	01 -		6075DA	- 559	B-108	B-124	B-143
2.59	150	15.3	3310	338	*1	3.13	150	15.3	3310	338	*1	01 -		6090DA	- 559	B-108	B-124	B-143
	200	20.4	3220	328	*1		200	20.4	3220	328	*1	01 -		6095DA	- 559	B-108	B-124	B-143
	250	25.5	5400	550	*1		250	25.5	5400	550	*1	01 -		6100DA	- 559	B-108	B-124	B-143
			4380	446	0.91				5400	550	1.09	01 -		6105DA	- 559	B-108	B-124	B-143
	331	33.8	9810	1000	1.58		275	28.0	9810	1000	1.91	01 -		6120DA	- 559	B-108	B-124	B-143
			9810	1000	1.90				9810	1000	2.29	01 -		6125DA	- 559	B-108	B-124	B-143
	45.0	4.59	1770	180	*1		45.0	4.59	1770	180	*1	01 -		6070DA	- 649	B-108	B-124	B-143
	57.4	5.85	1580	161	*1		57.4	5.85	1580	161	*1	01 -		6075DA	- 649	B-108	B-124	B-143
	146	14.9	3300	336	*1		146	14.9	3300	336	*1	01 -		6090DA	- 649	B-108	B-124	B-143
2.23	250	25.5	5400	550	*1	2.70	250	25.5	5400	550	*1	01 -		6100DA	- 649	B-108	B-124	B-143
	296	30.2	5090	519	*1		296	30.2	5090	519	*1	01 -		6105DA	- 649	B-108	B-124	B-143
	385	39.2	9810	1000	1.36		319	32.5	9810	1000	1.65	01 -		6120DA	- 649	B-108	B-124	B-143
			9810	1000	1.64				9810	1000	1.98	01 -		6125DA	- 649	B-108	B-124	B-143
	24.0	2.45	1180	120	*1		24.0	2.45	1180	120	*1	01 -		6060DA	- 731	B-108	B-124	B-143
	30.0	3.06	1180	120	*1		30.0	3.06	1180	120	*1	01 -		6065DA	- 731	B-108	B-124	B-143
	45.0	4.59	1770	180	*1		45.0	4.59	1770	180	*1	01 -		6070DA	- 731	B-108	B-124	B-143
	60.0	6.12	1660	169	*1		60.0	6.12	1660	169	*1	01 -		6075DA	- 731	B-108	B-124	B-143
1.98	150	15.3	3310	338	*1	2.39	150	15.3	3310	338	*1	01 -		6090DA	- 731	B-108	B-124	B-143
	200	20.4	3220	328	*1		200	20.4	3220	328	*1	01 -		6095DA	- 731	B-108	B-124	B-143
	250	25.5	5400	550	*1		250	25.5	5400	550	*1	01 -		6100DA	- 731	B-108	B-124	B-143
	300	30.6	5400	550	*1		300	30.6	5400	550	*1	01 -		6105DA	- 731	B-108	B-124	B-143
	433	44.2	9810	1000	1.21		359	36.6	9810	1000	1.46	01 -		6120DA	- 731	B-108	B-124	B-143
			9810	1000	1.45				9810	1000	1.75	01 -		6125DA	- 731	B-108	B-124	B-143

1. Combinations in **bold** are the recommended models for operations for 10 hours/day with uniform load (service factor is about 1.0 for motor rating at 50Hz).
2. Motor slippage may affect n_1 and n_2. Refer to technical data for details.
3. CNHM, CHHM, CNFM, CHFM, CNVM, and CVVM indicate types. Refer to page B-10 for details.
4. Lubrication method is different for each model. Refer to "Lubrication" section in page F-4~F-5 for details.
5. "6" at the end of "input capacity symbol" indicates models with 6P motor. Other models come with 4P motor.

Selection Tables Gearmotors

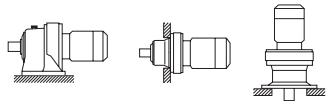

CHHM/CNHM CHFM/CNFM CVVM/CNVM

n1: Motor Speed

0.1 kW	Hz	50Hz		60Hz	
	P	4	6	4	6
	n1 r/min	1450	980	1750	1165

50Hz						60Hz						Nomenclature	Page of Dimension Sheet		
Output Speed n2 [r/min]	Output Torque Tout [N·m]	[kgf·m]	Allowable Radial Load Pro [N]	[kgf]	SF	Output Speed n2 [r/min]	Output Torque Tout [N·m]	[kgf·m]	Allowable Radial Load Pro [N]	[kgf]	SF	Input Capacity Symbol - Frame Size - Reduction Ratio	CNHM CHHM	CNFM CHFM	CNVM CVVM
1.72	24.0	2.45	1180	120	*1	2.08	24.0	2.45	1180	120	*1	01 - 6060DA - 841	B-108	B-124	B-143
	30.0	3.06	1180	120	*1		30.0	3.06	1180	120	*1	01 - 6065DA - 841	B-108	B-124	B-143
	45.0	4.59	1770	180	*1		45.0	4.59	1770	180	*1	01 - 6070DA - 841	B-108	B-124	B-143
	60.0	6.12	1770	180	*1		60.0	6.12	1770	180	*1	01 - 6075DA - 841	B-108	B-124	B-143
	150	15.3	3290	336	*1		150	15.3	3290	336	*1	01 - 6090DA - 841	B-108	B-124	B-143
	200	20.4	3200	326	*1		200	20.4	3200	326	*1	01 - 6095DA - 841	B-108	B-124	B-143
	250	25.5	5400	550	*1		250	25.5	5400	550	*1	01 - 6100DA - 841	B-108	B-124	B-143
	300	30.6	5400	550	*1		300	30.6	5400	550	*1	01 - 6105DA - 841	B-108	B-124	B-143
	499	50.8	**9810**	**1000**	**1.04**		413	42.1	**9810**	**1000**	**1.26**	**01 - 6120DA - 841**	**B-108**	**B-124**	**B-143**
			9810	1000	1.26				9810	1000	1.53	01 - 6125DA - 841	B-108	B-124	B-143
1.45	45.0	4.59	1770	180	*1	1.74	45.0	4.59	1770	180	*1	01 - 6070DA - 1003	B-108	B-124	B-143
	57.4	5.85	1580	161	*1		57.4	5.85	1580	161	*1	01 - 6075DA - 1003	B-108	B-124	B-143
	146	14.9	3300	336	*1		146	14.9	3300	336	*1	01 - 6090DA - 1003	B-108	B-124	B-143
	250	25.5	5400	550	*1		250	25.5	5400	550	*1	01 - 6100DA - 1003	B-108	B-124	B-143
	296	30.2	5090	519	*1		296	30.2	5090	519	*1	01 - 6105DA - 1003	B-108	B-124	B-143
	595	**60.6**	**9810**	**1000**	**1.06**		**493**	**50.2**	**9810**	**1000**	**1.28**	**01 - 6125DA - 1003**	**B-108**	**B-124**	**B-143**
1.16	24.0	2.45	1180	120	*1	1.40	24.0	2.45	1180	120	*1	01 - 6060DA - 1247	B-108	B-124	B-143
	30.0	3.06	1180	120	*1		30.0	3.06	1180	120	*1	01 - 6065DA - 1247	B-108	B-124	B-143
	45.0	4.59	1770	180	*1		45.0	4.59	1770	180	*1	01 - 6070DA - 1247	B-108	B-124	B-143
	60.0	6.12	1660	169	*1		60.0	6.12	1660	169	*1	01 - 6075DA - 1247	B-108	B-124	B-143
	150	15.3	3310	338	*1		150	15.3	3310	338	*1	01 - 6090DA - 1247	B-108	B-124	B-143
	200	20.4	3220	328	*1		200	20.4	3220	328	*1	01 - 6095DA - 1247	B-108	B-124	B-143
	250	25.5	5400	550	*1		250	25.5	5400	550	*1	01 - 6100DA - 1247	B-108	B-124	B-143
	300	30.6	5400	550	*1		300	30.6	5400	550	*1	01 - 6105DA - 1247	B-108	B-124	B-143
	525	53.5	9810	1000	*1		525	53.5	9810	1000	*1	01 - 6120DA - 1247	B-108	B-124	B-143
	739	75.3	9810	1000	0.85		612	62.4	9810	1000	1.03	01 - 6125DA - 1247	B-108	B-124	B-143
0.980	150	15.3	3310	338	*1	1.18	150	15.3	3310	338	*1	01 - 6090DA - 1479	B-108	B-124	B-143
	193	19.6	3240	330	*1		193	19.6	3240	330	*1	01 - 6095DA - 1479	B-108	B-124	B-143
	250	25.5	5400	550	*1		250	25.5	5400	550	*1	01 - 6100DA - 1479	B-108	B-124	B-143
	300	30.6	4780	488	*1		300	30.6	4780	488	*1	01 - 6105DA - 1479	B-108	B-124	B-143
	525	53.5	9780	997	*1		525	53.5	9780	997	*1	01 - 6120DA - 1479	B-108	B-124	B-143
	630	64.2	9560	974	*1		630	64.2	9560	974	*1	01 - 6125DA - 1479	B-108	B-124	B-143
0.784	24.0	2.45	1180	120	*1	0.946	24.0	2.45	1180	120	*1	01 - 6060DA - 1849	B-108	B-124	B-143
	30.0	3.06	1180	120	*1		30.0	3.06	1180	120	*1	01 - 6065DA - 1849	B-108	B-124	B-143
	45.0	4.59	1770	180	*1		45.0	4.59	1770	180	*1	01 - 6070DA - 1849	B-108	B-124	B-143
	60.0	6.12	1660	169	*1		60.0	6.12	1660	169	*1	01 - 6075DA - 1849	B-108	B-124	B-143
	150	15.3	3310	338	*1		150	15.3	3310	338	*1	01 - 6090DA - 1849	B-108	B-124	B-143
	200	20.4	3220	328	*1		200	20.4	3220	328	*1	01 - 6095DA - 1849	B-108	B-124	B-143
	250	25.5	5400	550	*1		250	25.5	5400	550	*1	01 - 6100DA - 1849	B-108	B-124	B-143
	300	30.6	5400	550	*1		300	30.6	5400	550	*1	01 - 6105DA - 1849	B-108	B-124	B-143
	525	53.5	9810	1000	*1		525	53.5	9810	1000	*1	01 - 6120DA - 1849	B-108	B-124	B-143
	630	64.2	9810	1000	*1		630	64.2	9810	1000	*1	01 - 6125DA - 1849	B-108	B-124	B-143
0.702	45.0	4.59	1770	180	*1	0.847	45.0	4.59	1770	180	*1	01 - 6070DA - 2065	B-108	B-124	B-143
	57.4	5.85	1580	161	*1		57.4	5.85	1580	161	*1	01 - 6075DA - 2065	B-108	B-124	B-143
	146	14.9	3300	336	*1		146	14.9	3300	336	*1	01 - 6090DA - 2065	B-108	B-124	B-143
	250	25.5	5400	550	*1		250	25.5	5400	550	*1	01 - 6100DA - 2065	B-108	B-124	B-143
	296	30.2	5090	519	*1		296	30.2	5090	519	*1	01 - 6105DA - 2065	B-108	B-124	B-143
	525	53.5	9810	1000	*1		525	53.5	9810	1000	*1	01 - 6120DA - 2065	B-108	B-124	B-143
	630	64.2	9810	1000	*1		630	64.2	9810	1000	*1	01 - 6125DA - 2065	B-108	B-124	B-143
0.572	45.0	4.59	1770	180	*1	0.690	45.0	4.59	1770	180	*1	01 - 6070DA - 2537	B-108	B-124	B-143
	57.4	5.85	1580	161	*1		57.4	5.85	1580	161	*1	01 - 6075DA - 2537	B-108	B-124	B-143
	146	14.9	3300	336	*1		146	14.9	3300	336	*1	01 - 6090DA - 2537	B-108	B-124	B-143
	250	25.5	5400	550	*1		250	25.5	5400	550	*1	01 - 6100DA - 2537	B-108	B-124	B-143
	296	30.2	5090	519	*1		296	30.2	5090	519	*1	01 - 6105DA - 2537	B-108	B-124	B-143
	525	53.5	9810	1000	*1		525	53.5	9810	1000	*1	01 - 6120DA - 2537	B-108	B-124	B-143
	630	64.2	9810	1000	*1		630	64.2	9810	1000	*1	01 - 6125DA - 2537	B-108	B-124	B-143

6. "*2" indicate models manufactured with reducer and motor separately mounted on a common baseplate (horizontal shaft direction) or on an adaptor (vertical shaft direction). Consult us for details, including dimensions.
7. Allowable radial load (Pro) is the value at the midpoint of the slow speed shaft.
8. "*3" indicate models with reduction ratios equal to nominal ratio. Refer to Table A-3 "6000SK Series (Actual Reduction Ratio)" on page A-4 for actual reduction ratio. Indicated reduction ratio is the same as actual reduction ratio for other models.
9. Maintain torque load during operation within "Output torque" in the table for models with "*1" in the SF column. They cannot be operated with 100% motor rating.

Selection Tables Gearmotors

n_1: Motor Speed

0.1 kW	Hz		50Hz		60Hz	
	P		4	6	4	6
	n_1	r/min	1450	980	1750	1165

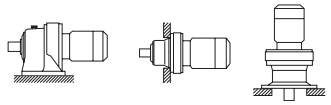

50Hz						60Hz						Nomenclature					Page of Dimension Sheet		
Output Speed n_2	Output Torque Tout		Allowable Radial Load Pro		SF	Output Speed n_2	Output Torque Tout		Allowable Radial Load Pro		SF	Input Capacity Symbol	-	Frame Size	-	Reduction Ratio	CNHM CHHM	CNFM CHFM	CNVM CVVM
[r/min]	[N·m]	[kgf·m]	[N]	[kgf]		[r/min]	[N·m]	[kgf·m]	[N]	[kgf]									
0.476	150	15.3	3310	338	*1	0.575	150	15.3	3310	338	*1	01	-	6090DA	-	3045	B-108	B-124	B-143
	192	19.6	3240	330	*1		192	19.6	3240	330	*1	01	-	6095DA	-	3045	B-108	B-124	B-143
	250	25.5	5400	550	*1		250	25.5	5400	550	*1	01	-	6100DA	-	3045	B-108	B-124	B-143
	300	30.6	4780	488	*1		300	30.6	4780	488	*1	01	-	6105DA	-	3045	B-108	B-124	B-143
	525	53.5	9780	997	*1		525	53.5	9780	997	*1	01	-	6120DA	-	3045	B-108	B-124	B-143
	630	64.2	9560	974	*1		630	64.2	9560	974	*1	01	-	6125DA	-	3045	B-108	B-124	B-143
0.417	146	14.9	3300	336	*1	0.503	146	14.9	3300	336	*1	01	-	6090DA	-	3481	B-108	B-124	B-143
	250	25.5	5400	550	*1		250	25.5	5400	550	*1	01	-	6100DA	-	3481	B-108	B-124	B-143
	296	30.2	5090	519	*1		296	30.2	5090	519	*1	01	-	6105DA	-	3481	B-108	B-124	B-143
	525	53.5	9810	1000	*1		525	53.5	9810	1000	*1	01	-	6120DA	-	3481	B-108	B-124	B-143
	630	64.2	9810	1000	*1		630	64.2	9810	1000	*1	01	-	6125DA	-	3481	B-108	B-124	B-143
0.327	150	15.3	3310	338	*1	0.394	150	15.3	3310	338	*1	01	-	6090DA	-	4437	B-108	B-124	B-143
	192	19.6	3240	330	*1		192	19.6	3240	330	*1	01	-	6095DA	-	4437	B-108	B-124	B-143
	250	25.5	5400	550	*1		250	25.5	5400	550	*1	01	-	6100DA	-	4437	B-108	B-124	B-143
	300	30.6	4780	488	*1		300	30.6	4780	488	*1	01	-	6105DA	-	4437	B-108	B-124	B-143
	525	53.5	9780	997	*1		525	53.5	9780	997	*1	01	-	6120DA	-	4437	B-108	B-124	B-143
	630	64.2	9560	974	*1		630	64.2	9560	974	*1	01	-	6125DA	-	4437	B-108	B-124	B-143
0.282	150	15.3	3310	338	*1	0.341	150	15.3	3310	338	*1	01	-	6090DA	-	5133	B-108	B-124	B-143
	192	19.6	3240	330	*1		192	19.6	3240	330	*1	01	-	6095DA	-	5133	B-108	B-124	B-143
	250	25.5	5400	550	*1		250	25.5	5400	550	*1	01	-	6100DA	-	5133	B-108	B-124	B-143
	300	30.6	4780	488	*1		300	30.6	4780	488	*1	01	-	6105DA	-	5133	B-108	B-124	B-143
	525	53.5	9780	997	*1		525	53.5	9780	997	*1	01	-	6120DA	-	5133	B-108	B-124	B-143
	630	64.2	9560	974	*1		630	64.2	9560	974	*1	01	-	6125DA	-	5133	B-108	B-124	B-143
0.235	525	53.5	9780	997	*1	0.283	525	53.5	9780	997	*1	01	-	6120DB	-	6177	B-108	B-124	B-143
	630	64.2	9560	974	*1		630	64.2	9560	974	*1	01	-	6125DB	-	6177	B-108	B-124	B-143
0.192	525	53.5	9780	997	*1	0.231	525	53.5	9780	997	*1	01	-	6120DB	-	7569	B-108	B-124	B-143
	630	64.2	9560	974	*1		630	64.2	9560	974	*1	01	-	6125DB	-	7569	B-108	B-124	B-143

n_1: Motor Speed

0.2 kW	Hz		50Hz		60Hz	
	P		4	6	4	6
	n1	r/min	1450	980	1750	1165

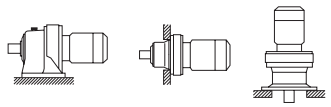

50Hz						60Hz						Nomenclature					Page of Dimension Sheet		
Output Speed n_2	Output Torque Tout		Allowable Radial Load Pro		SF	Output Speed n_2	Output Torque Tout		Allowable Radial Load Pro		SF	Input Capacity Symbol	-	Frame Size	-	Reduction Ratio	CNHM CHHM	CNFM CHFM	CNVM CVVM
[r/min]	[N·m]	[kgf·m]	[N]	[kgf]		[r/min]	[N·m]	[kgf·m]	[N]	[kgf]									
242	7.51	0.765	**798**	**81.4**	**1.00**	292	6.22	0.634	**751**	**76.6**	**1.00**	**02**	**-**	**6060**	**-**	**6**	**B-100**	**B-116**	**B-135**
			798	81.4	1.43				751	76.6	1.43	02	-	6065	-	6	B-100	B-116	B-135
			1390	142	1.74				1310	134	1.74	02	-	6070	-	6	B-100	B-116	B-135
			1390	142	2.04				1310	134	2.04	02	-	6075	-	6	B-100	B-116	B-135
			1930	197	2.96				1820	185	2.96	02	-	6080	-	6	B-100	B-116	B-135
181	10.0	1.02	**912**	**93.0**	**1.00**	219	8.29	0.846	**859**	**87.5**	**1.00**	**02**	**-**	**6060**	**-**	**8**	**B-100**	**B-116**	**B-135**
			912	93	1.43				859	88	1.43	02	-	6065	-	8	B-100	B-116	B-135
			1540	157	1.74				1450	148	1.74	02	-	6070	-	8	B-100	B-116	B-135
			1540	157	2.04				1450	148	2.04	02	-	6075	-	8	B-100	B-116	B-135
			2100	214	2.96				1970	201	2.96	02	-	6080	-	8	B-100	B-116	B-135

1. Combinations in **bold** are the recommended models for operations for 10 hours/day with uniform load (service factor is about 1.0 for motor rating at 50Hz).
2. Motor slippage may affect n_1 and n_2. Refer to technical data for details.
3. CNHM, CHHM, CNFM, CHFM, CNVM, and CVVM indicate types. Refer to page B-10 for details.
4. Lubrication method is different for each model. Refer to "Lubrication" section in page F-4~F-5 for details.
5. "6" at the end of "input capacity symbol" indicates models with 6P motor. Other models come with 4P motor.

Selection Tables Gearmotors

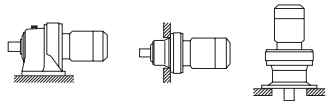

CHHM/CNHM CHFM/CNFM CVVM/CNVM

0.2 kW

n_1: Motor Speed

Hz	50Hz		60Hz	
P	4	6	4	6
n_1 r/min	1450	980	1750	1165

50Hz						60Hz						Nomenclature				Page of Dimension Sheet		
Output Speed n_2 [r/min]	Output Torque Tout [N·m]	[kgf·m]	Allowable Radial Load Pro [N]	[kgf]	SF	Output Speed n_2 [r/min]	Output Torque Tout [N·m]	[kgf·m]	Allowable Radial Load Pro [N]	[kgf]	SF	Input Capacity Symbol	- Frame Size	- Reduction Ratio		CNHM CHHM	CNFM CHFM	CNVM CVVM
			1180	**120**	**1.00**				**1170**	**119**	**1.00**	**02 -**	**6060**	**-**	**11**	**B-100**	**B-116**	**B-135**
			1180	120	1.43				1170	119	1.43	02 -	6065	-	11	B-100	B-116	B-135
132	13.8	1.40	1730	176	1.74	159	11.4	1.16	1630	166	1.74	02 -	6070	-	11	B-100	B-116	B-135
			1730	176	2.04				1630	166	2.04	02 -	6075	-	11	B-100	B-116	B-135
			2320	236	2.96				2180	222	2.96	02 -	6080	-	11	B-100	B-116	B-135
			1180	**120**	**1.00**				**1180**	**120**	**1.00**	**02 -**	**6060**	**-**	**13**	**B-100**	**B-116**	**B-135**
			1180	120	1.43				1180	120	1.43	02 -	6065	-	13	B-100	B-116	B-135
112	16.3	1.66	1770	180	1.74	135	13.5	1.37	1720	175	1.74	02 -	6070	-	13	B-100	B-116	B-135
			1770	180	2.04				1720	175	2.04	02 -	6075	-	13	B-100	B-116	B-135
			2500	254	2.96				2350	239	2.96	02 -	6080	-	13	B-100	B-116	B-135
			1180	**120**	**1.00**				**1180**	**120**	**1.00**	**02 -**	**6060**	**-**	**15**	**B-100**	**B-116**	**B-135**
			1180	120	1.43				1180	120	1.43	02 -	6065	-	15	B-100	B-116	B-135
96.7	18.8	1.91	1770	180	1.74	117	15.6	1.59	1730	176	1.74	02 -	6070	-	15	B-100	B-116	B-135
			1770	180	2.04				1730	176	2.04	02 -	6075	-	15	B-100	B-116	B-135
			2560	261	2.96				2420	247	2.96	02 -	6080	-	15	B-100	B-116	B-135
			1180	**120**	**1.00**				**1180**	**120**	**1.00**	**02 -**	**6060**	**-**	**17**	**B-100**	**B-116**	**B-135**
			1180	120	1.41				1180	120	1.43	02 -	6065	-	17	B-100	B-116	B-135
85.3	21.3	2.17	1770	180	1.74	103	17.6	1.80	1770	180	1.74	02 -	6070	-	17	B-100	B-116	B-135
			1770	180	2.04				1770	180	2.04	02 -	6075	-	17	B-100	B-116	B-135
			2560	261	2.96				2540	259	2.96	02 -	6080	-	17	B-100	B-116	B-135
			1180	**120**	**1.14**				**1180**	**120**	**1.17**	**02 -**	**6065**	**-**	**21**	**B-100**	**B-116**	**B-135**
			1770	180	1.60				1770	180	1.60	02 -	6070	-	21	B-100	B-116	B-135
69.0	26.3	2.68	1770	180	2.04	83.3	21.8	2.22	1770	180	2.04	02 -	6075	-	21	B-100	B-116	B-135
			2560	261	2.39				2480	253	2.39	02 -	6080	-	21	B-100	B-116	B-135
			2560	261	2.75				2480	253	2.75	02 -	6085	-	21	B-100	B-116	B-135
			1180	120	0.83				1180	120	0.83	02 -	6065	-	25	B-100	B-116	B-135
			1770	**180**	**1.15**				**1770**	**180**	**1.15**	**02 -**	**6070**	**-**	**25**	**B-100**	**B-116**	**B-135**
58.0	31.3	3.19	1770	180	1.47	70.0	25.9	2.64	1770	180	1.47	02 -	6075	-	25	B-100	B-116	B-135
			2560	261	1.70				2550	260	1.70	02 -	6080	-	25	B-100	B-116	B-135
			2560	261	2.38				2550	260	2.38	02 -	6085	-	25	B-100	B-116	B-135
			1180	120	0.83				1180	120	0.83	02 -	6065	-	29	B-100	B-116	B-135
			1770	**180**	**1.13**				**1770**	**180**	**1.13**	**02 -**	**6070**	**-**	**29**	**B-100**	**B-116**	**B-135**
50.0	36.3	3.70	1770	180	1.43	60.3	30.1	3.07	1770	180	1.43	02 -	6075	-	29	B-100	B-116	B-135
			2560	261	1.70				2560	261	1.70	02 -	6080	-	29	B-100	B-116	B-135
			2560	261	2.34				2560	261	2.34	02 -	6085	-	29	B-100	B-116	B-135
			1770	**180**	**1.03**				**1770**	**180**	**1.06**	**02 -**	**6070**	**-**	**35**	**B-100**	**B-116**	**B-135**
			1770	180	1.36				1770	180	1.40	02 -	6075	-	35	B-100	B-116	B-135
41.4	43.8	4.46	2560	261	1.45	50.0	36.3	3.70	2560	261	1.65	02 -	6080	-	35	B-100	B-116	B-135
			2560	261	1.64				2560	261	1.86	02 -	6085	-	35	B-100	B-116	B-135
			3340	340	3.06				3340	340	3.06	02 -	6090	-	35	B-100	B-116	B-135
			1770	**180**	**1.12**				**1770**	**180**	**1.13**	**02 -**	**6075**	**-**	**43**	**B-100**	**B-116**	**B-135**
33.7	53.8	5.49	2560	261	1.25	40.7	44.6	4.54	2560	261	1.25	02 -	6080	-	43	B-100	B-116	B-135
			2560	261	1.47				2560	261	1.47	02 -	6085	-	43	B-100	B-116	B-135
			3340	340	2.18				3340	340	2.18	02 -	6090	-	43	B-100	B-116	B-135
			2560	**261**	**1.21**				**2560**	**261**	**1.21**	**02 -**	**6085**	**-**	**51**	**B-100**	**B-116**	**B-135**
28.4	63.8	6.51	3340	340	1.66	34.3	52.9	5.39	3340	340	1.66	02 -	6090	-	51	B-100	B-116	B-135
			3340	340	2.04				3340	340	2.11	02 -	6095	-	51	B-100	B-116	B-135
			5400	550	2.80				5400	550	2.80	02 -	6100	-	51	B-101	B-117	B-136
			2560	**261**	**1.17**				**2560**	**261**	**1.17**	**02 -**	**6085**	**-**	**59**	**B-100**	**B-116**	**B-135**
24.6	73.8	7.53	3340	340	1.55	29.7	61.2	6.24	3340	340	1.55	02 -	6090	-	59	B-100	B-116	B-135
			3340	340	1.68				3340	340	1.87	02 -	6095	-	59	B-100	B-116	B-135
			5400	550	2.58				5400	550	2.58	02 -	6100	-	59	B-101	B-117	B-136
			2380	243	0.83				2510	256	0.94	02 -	6085	-	71	B-100	B-116	B-135
			3340	**340**	**1.26**				**3340**	**340**	**1.26**	**02 -**	**6090**	**-**	**71**	**B-100**	**B-116**	**B-135**
20.4	88.8	9.06	3340	340	1.39	24.6	73.6	7.50	3340	340	1.51	02 -	6095	-	71	B-100	B-116	B-135
			5400	550	2.18				5400	550	2.18	02 -	6100	-	71	B-101	B-117	B-136
			5400	550	2.53				5400	550	2.81	02 -	6105	-	71	B-101	B-117	B-136

6. "*2" indicate models manufactured with reducer and motor separately mounted on a common baseplate (horizontal shaft direction) or on an adaptor (vertical shaft direction). Consult us for details, including dimensions.
7. Allowable radial load (Pro) is the value at the midpoint of the slow speed shaft.
8. "*3" indicate models with reduction ratios equal to nominal ratio. Refer to Table A-3 "6000SK Series (Actual Reduction Ratio)" on page A-4 for actual reduction ratio. Indicated reduction ratio is the same as actual reduction ratio for other models.
9. Maintain torque load during operation within "Output torque" in the table for models with "*1" in the SF column. They cannot be operated with 100% motor rating.

Selection Tables Gearmotors

n_1: Motor Speed

0.2 kW	Hz		50Hz		60Hz	
	P		4	6	4	6
	n_1	r/min	1450	980	1750	1165

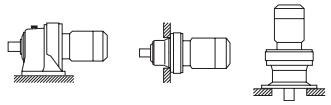

CHHM/CNHM CHFM/CNFM CVVM/CNVM

50Hz						60Hz						Nomenclature				Page of Dimension Sheet		
Output Speed n_2 [r/min]	Output Torque Tout [N·m]	[kgf·m]	Allowable Radial Load Pro [N]	[kgf]	SF	Output Speed n_2 [r/min]	Output Torque Tout [N·m]	[kgf·m]	Allowable Radial Load Pro [N]	[kgf]	SF	Input Capacity Symbol	- Frame Size	-	Reduction Ratio	CNHM CHHM	CNFM CHFM	CNVM CVVM
			3340	**340**	**1.06**				**3340**	**340**	**1.06**	**02 -**	**6090**	**-**	**87**	**B-100**	**B-116**	**B-135**
16.7	109	11.1	3340	340	1.32	20.1	90.2	9.20	3340	340	1.51	02 -	6095	-	87	B-100	B-116	B-135
			5400	550	2.17				5400	550	2.17	02 -	6100	-	87	B-101	B-117	B-136
			5400	550	2.52				5400	550	2.83	02 -	6105	-	87	B-101	B-117	B-136
	60.0	6.12	1770	180	*1		60.0	6.12	1770	180	*1	02 -	6075DA	-	104	B-108	B-124	B-143
13.9			3340	340	1.22	16.8			3340	340	1.47	02 -	6090DA	-	104	B-108	B-124	B-143
	123	12.6	3340	340	1.47		102	10.4	3340	340	1.77	02 -	6095DA	-	104	B-108	B-124	B-143
			5400	550	2.03				5400	550	2.15	02 -	6100DA	-	104	B-108	B-124	B-143
			5400	550	2.15				5400	550	2.15	02 -	6105DA	-	104	B-108	B-124	B-143
12.2	149.0	15.2	**5400**	**550**	**1.05**	14.7	123	12.6	**5400**	**550**	**1.05**	**02 -**	**6100**	**-**	**119**	**B-101**	**B-117**	**B-136**
			5400	550	1.43				5400	550	1.43	02 -	6105	-	119	B-101	B-117	B-136
			3340	**340**	**1.05**				**3340**	**340**	**1.26**	**02 -**	**6090DA**	**-**	**121**	**B-108**	**B-124**	**B-143**
			3340	340	1.12				3340	340	1.35	02 -	6095DA	-	121	B-108	B-124	B-143
12.0	143	14.6	5400	550	1.74	14.5	119	12.1	5400	550	2.10	02 -	6100DA	-	121	B-108	B-124	B-143
			5400	550	2.14				5400	550	2.15	02 -	6105DA	-	121	B-108	B-124	B-143
			9810	1000	2.15				9810	1000	2.15	02 -	6120DA	-	121	B-108	B-124	B-143
			3340	**340**	**1.08**				**3340**	**340**	**1.30**	**02 -**	**6095DA**	**-**	**143**	**B-108**	**B-124**	**B-143**
			5400	550	1.47				5400	550	1.78	02 -	6100DA	-	143	B-108	B-124	B-143
10.1	170	17.3	5400	550	1.77	12.2	140	14.3	5400	550	2.14	02 -	6105DA	-	143	B-108	B-124	B-143
			9810	1000	2.15				9810	1000	2.15	02 -	6120DA	-	143	B-108	B-124	B-143
	150	15.3	3340	340	*1		150	15.3	3340	340	*1	02 -	6090DA	-	165	B-108	B-124	B-143
			3340	**340**	**1.02**				**3340**	**340**	**1.23**	**02 -**	**6095DA**	**-**	**165**	**B-108**	**B-124**	**B-143**
8.79			5400	550	1.28	10.6			5400	550	1.54	02 -	6100DA	-	165	B-108	B-124	B-143
	196	19.9	5400	550	1.53		162	16.5	5400	550	1.85	02 -	6105DA	-	165	B-108	B-124	B-143
			9810	1000	2.15				9810	1000	2.15	02 -	6120DA	-	165	B-108	B-124	B-143
			9810	1000	2.68				9810	1000	3.24	02 -	6120DB	-	165	B-108	B-124	B-143
	150	15.3	3340	340	*1		150	15.3	3340	340	*1	02 -	6090DA	-	195	B-108	B-124	B-143
			3340	340	0.87				3340	340	1.04	02 -	6095DA	-	195	B-108	B-124	B-143
			5400	550	1.08				5400	550	1.31	02 -	6100DA	-	195	B-108	B-124	B-143
7.44	231	23.6	5400	550	1.30	8.97	192	19.5	5400	550	1.57	02 -	6105DA	-	195	B-108	B-124	B-143
			9810	1000	2.15				9810	1000	2.15	02 -	6120DA	-	195	B-108	B-124	B-143
			9810	1000	2.27				9810	1000	2.74	02 -	6120DB	-	195	B-108	B-124	B-143
			9810	1000	2.73				9810	1000	3.29	02 -	6125DB	-	195	B-108	B-124	B-143
	150	15.3	3340	340	*1		150	15.3	3340	340	*1	02 -	6090DA	-	231	B-108	B-124	B-143
	200	20.4	3340	340	*1		200	20.4	3340	340	*1	02 -	6095DA	-	231	B-108	B-124	B-143
			5400	550	1.10				5400	550	1.32	02 -	6105DA	-	231	B-108	B-124	B-143
6.28			9810	1000	1.91	7.58			9810	1000	2.15	02 -	6120DA	-	231	B-108	B-124	B-143
	274	27.9	9810	1000	1.91		227	23.1	9810	1000	2.30	02 -	6120DB	-	231	B-108	B-124	B-143
			9810	1000	2.15				9810	1000	2.15	02 -	6125DA	-	231	B-108	B-124	B-143
			9810	1000	2.30				9810	1000	2.78	02 -	6125DB	-	231	B-108	B-124	B-143
			14700	1500	2.85				14700	1500	3.44	02 -	6130DB	-	231	B-109	B-125	B-143
	150	15.3	3340	340	*1		150	15.3	3340	340	*1	02 -	6090DA	-	273	B-108	B-124	B-143
	200	20.4	3340	340	*1		200	20.4	3340	340	*1	02 -	6095DA	-	273	B-108	B-124	B-143
	250	25.5	5400	550	*1		250	25.5	5400	550	*1	02 -	6100DA	-	273	B-108	B-124	B-143
			5400	550	0.93				5400	550	1.12	02 -	6105DA	-	273	B-108	B-124	B-143
5.31			9810	1000	1.61	6.41			9810	1000	1.95	02 -	6120DA	-	273	B-108	B-124	B-143
			9810	1000	1.95				9810	1000	2.15	02 -	6125DA	-	273	B-108	B-124	B-143
	324	33.0	9810	1000	1.95		268	27.3	9810	1000	2.35	02 -	6125DB	-	273	B-108	B-124	B-143
			14700	1500	2.15				14700	1500	2.15	02 -	6130DA	-	273	B-109	B-125	B-144
			14700	1500	2.41				14700	1500	2.91	02 -	6130DB	-	273	B-109	B-125	B-143
			14700	1500	2.90				14700	1500	3.51	02 -	6135DB	-	273	B-109	B-125	B-144

1. Combinations in **bold** are the recommended models for operations for 10 hours/day with uniform load (service factor is about 1.0 for motor rating at 50Hz).
2. Motor slippage may affect n_1 and n_2. Refer to technical data for details.
3. CNHM, CHHM, CNFM, CHFM, CNVM, and CVVM indicate types. Refer to page B-10 for details.
4. Lubrication method is different for each model. Refer to "Lubrication" section in page F-4~F-5 for details.
5. "6" at the end of "input capacity symbol" indicates models with 6P motor. Other models come with 4P motor.

Selection Tables Gearmotors

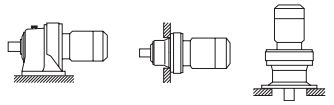

CHHM/CNHM CHFM/CNFM CVVM/CNVM

n_1: Motor Speed

0.2 kW	Hz	50Hz		60Hz	
	P	4	6	4	6
	n_1 r/min	1450	980	1750	1165

50Hz						60Hz						Nomenclature	Page of Dimension Sheet		
Output Speed n_2 [r/min]	Output Torque Tout [N·m]	Output Torque Tout [kgf·m]	Allowable Radial Load Pro [N]	Allowable Radial Load Pro [kgf]	SF	Output Speed n_2 [r/min]	Output Torque Tout [N·m]	Output Torque Tout [kgf·m]	Allowable Radial Load Pro [N]	Allowable Radial Load Pro [kgf]	SF	Input Capacity Symbol - Frame Size - Reduction Ratio	CNHM CHHM	CNFM CHFM	CNVM CVVM
4.55	200	20.4	3200	326	*1	5.49	200	20.4	3200	326	*1	02 - 6095DA - 319	B-108	B-124	B-143
	250	25.5	5400	550	*1		250	25.5	5400	550	*1	02 - 6100DA - 319	B-108	B-124	B-143
	300	30.6	5400	550	*1		300	30.6	5400	550	*1	02 - 6105DA - 319	B-108	B-124	B-143
	378	38.6	9810	1000	1.38		313	31.9	9810	1000	1.66	02 - 6120DA - 319	B-108	B-124	B-143
			9810	1000	1.67				9810	1000	2.01	02 - 6125DA - 319	B-108	B-124	B-143
			14700	1500	2.06				14700	1500	2.15	02 - 6130DA - 319	B-109	B-125	B-144
			14700	1500	2.06				14700	1500	2.49	02 - 6130DB - 319	B-109	B-125	B-143
			14700	1500	2.15				14700	1500	2.15	02 - 6135DA - 319	B-109	B-125	B-144
			14700	1500	2.49				14700	1500	3.00	02 - 6135DB - 319	B-109	B-125	B-144
3.85	200	20.4	3200	326	*1	4.64	200	20.4	3200	326	*1	02 - 6095DA - 377	B-108	B-124	B-143
	250	25.5	5400	550	*1		250	25.5	5400	550	*1	02 - 6100DA - 377	B-108	B-124	B-143
	300	30.6	5400	550	*1		300	30.6	5400	550	*1	02 - 6105DA - 377	B-108	B-124	B-143
	447	45.6	9810	1000	1.16		370	37.7	9810	1000	1.40	02 - 6120DA - 377	B-108	B-124	B-143
			9810	1000	1.41				9810	1000	1.70	02 - 6125DA - 377	B-108	B-124	B-143
			14700	1500	1.75				14700	1500	2.11	02 - 6130DA - 377	B-109	B-125	B-144
			14700	1500	2.10				14700	1500	2.15	02 - 6135DA - 377	B-109	B-125	B-144
			14700	1500	2.10				14700	1500	2.54	02 - 6135DB - 377	B-109	B-125	B-144
			16000	1630	2.15				16000	1630	2.15	02 - 6140DA - 377	B-109	B-125	B-144
			16000	1630	2.74				16000	1630	3.31	02 - 6140DB - 377	B-109	B-125	B-144
3.07	250	25.5	5400	550	*1	3.70	250	25.5	5400	550	*1	02 - 6100DA - 473	B-108	B-124	B-143
	300	30.6	5400	550	*1		300	30.6	5400	550	*1	02 - 6105DA - 473	B-108	B-124	B-143
	561	57.2	9810	1000	1.12		465	47.4	9810	1000	1.36	02 - 6125DA - 473	B-108	B-124	B-143
			14700	1500	1.39				14700	1500	1.68	02 - 6130DA - 473	B-109	B-125	B-144
			14700	1500	1.68				14700	1500	2.02	02 - 6135DA - 473	B-109	B-125	B-144
			16000	1630	2.15				16000	1630	2.15	02 - 6140DA - 473	B-109	B-125	B-144
			16000	1630	2.18				16000	1630	2.64	02 - 6140DB - 473	B-109	B-125	B-144
			16000	1630	2.44				16000	1630	2.95	02 - 6145DB - 473	B-109	B-125	B-144
2.59	300	30.6	5400	550	*1	3.13	300	30.6	5400	550	*1	02 - 6105DA - 559	B-108	B-124	B-143
	525	53.5	9810	1000	*1		525	53.5	9810	1000	*1	02 - 6120DA - 559	B-108	B-124	B-143
	663	67.6	9810	1000	0.95		549	56.0	9810	1000	1.15	02 - 6125DA - 559	B-108	B-124	B-143
			14700	1500	1.18				14700	1500	1.42	02 - 6130DA - 559	B-109	B-125	B-144
			14700	1500	1.42				14700	1500	1.71	02 - 6135DA - 559	B-109	B-125	B-144
			16000	1630	1.85				16000	1630	2.15	02 - 6140DA - 559	B-109	B-125	B-144
			16000	1630	1.85				16000	1630	2.23	02 - 6140DB - 559	B-109	B-125	B-144
			16000	1630	2.07				16000	1630	2.15	02 - 6145DA - 559	B-109	B-125	B-144
			16000	1630	2.07				16000	1630	2.50	02 - 6145DB - 559	B-109	B-125	B-144
2.23	525	53.5	9810	1000	*1	2.70	525	53.5	9810	1000	*1	02 - 6120DA - 649	B-108	B-124	B-143
	630	64.2	9810	1000	*1		630	64.2	9810	1000	*1	02 - 6125DA - 649	B-108	B-124	B-143
	769	78.4	9810	1000	0.82		638	65.0	9810	1000	0.98	02 - 6125DA - 649	B-108	B-124	B-143
			14700	1500	1.19				14700	1500	1.43	02 - 6130DA - 649	B-109	B-125	B-144
			14700	1500	1.36				14700	1500	1.65	02 - 6135DA - 649	B-109	B-125	B-144
			16000	1630	1.59				16000	1630	1.92	02 - 6140DA - 649	B-109	B-125	B-144
			16000	1630	1.78				16000	1630	2.15	02 - 6145DA - 649	B-109	B-125	B-144
1.98	525	53.5	9810	1000	*1	2.39	525	53.5	9810	1000	*1	02 - 6120DA - 731	B-108	B-124	B-143
	630	64.2	9810	1000	*1		630	64.2	9810	1000	*1	02 - 6125DA - 731	B-108	B-124	B-143
	867	88.3	14700	1500	1.08		718	73.2	14700	1500	1.31	02 - 6135DA - 731	B-109	B-125	B-144
			16000	1630	1.41				16000	1630	1.71	02 - 6140DA - 731	B-109	B-125	B-144
			16000	1630	1.58				16000	1630	1.91	02 - 6145DA - 731	B-109	B-125	B-144
1.72	520	53.0	9810	1000	*1	2.08	520	53.0	9810	1000	*1	02 - 6120DA - 841	B-108	B-124	B-143
	630	64.2	9810	1000	*1		630	64.2	9810	1000	*1	02 - 6125DA - 841	B-108	B-124	B-143
	780	79.5	14700	1500	*1		780	79.5	14700	1500	*1	02 - 6130DA - 841	B-109	B-125	B-144
	997	102	14700	1500	0.94		826	84.2	14700	1500	1.14	02 - 6135DA - 841	B-109	B-125	B-144
			16000	1630	1.23				16000	1630	1.48	02 - 6140DA - 841	B-109	B-125	B-144
			16000	1630	1.37				16000	1630	1.51	02 - 6145DA - 841	B-109	B-125	B-144

6. "*2" indicate models manufactured with reducer and motor separately mounted on a common baseplate (horizontal shaft direction) or on an adaptor (vertical shaft direction). Consult us for details, including dimensions.
7. Allowable radial load (Pro) is the value at the midpoint of the slow speed shaft.
8. "*3" indicate models with reduction ratios equal to nominal ratio. Refer to Table A-3 "6000SK Series (Actual Reduction Ratio)" on page A-4 for actual reduction ratio. Indicated reduction ratio is the same as actual reduction ratio for other models.
9. Maintain torque load during operation within "Output torque" in the table for models with "*1" in the SF column. They cannot be operated with 100% motor rating.

Selection Tables Gearmotors

n_1: Motor Speed

0.2 kW	Hz		50Hz		60Hz	
	P		4	6	4	6
	n_1	r/min	1450	980	1750	1165

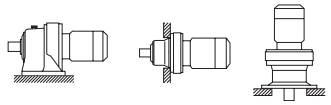

CHHM/CNHM CHFM/CNFM CVVM/CNVM

50Hz						60Hz						Nomenclature			Page of Dimension Sheet		
Output Speed n_2 [r/min]	Output Torque Tout [N·m]	[kgf·m]	Allowable Radial Load Pro [N]	[kgf]	SF	Output Speed n_2 [r/min]	Output Torque Tout [N·m]	[kgf·m]	Allowable Radial Load Pro [N]	[kgf]	SF	Input Capacity Symbol	Frame Size	Reduction Ratio	CNHM CHHM	CNFM CHFM	CNVM CVVM
1.45	525	53.5	9810	1000	*1	1.74	525	53.5	9810	1000	*1	02 -	6120DA	- 1003	B-108	B-124	B-143
	630	64.2	9810	1000	*1		630	64.2	9810	1000	*1	02 -	6125DA	- 1003	B-108	B-124	B-143
	912	93.0	14700	1500	*1		912	93.0	14700	1500	*1	02 -	6130DA	- 1003	B-109	B-125	B-144
			14700	1500	0.88				14700	1500	1.07	02 -	6135DA	- 1003	B-109	B-125	B-144
	1190	121	**16000**	**1630**	**1.03**		985	100	**16000**	**1630**	**1.24**	**02 -**	**6140DA**	**- 1003**	**B-109**	**B-125**	**B-144**
			16000	1630	1.15				16000	1630	1.39	02 -	6145DA	- 1003	B-109	B-125	B-144
1.16	630	64.2	9810	1000	*1	1.40	630	64.2	9810	1000	*1	02 -	6125DA	- 1247	B-108	B-124	B-143
	780	79.5	14700	1500	*1		780	79.5	14700	1500	*1	02 -	6130DA	- 1247	B-109	B-125	B-144
	940	95.8	14700	1500	*1		940	95.8	14700	1500	*1	02 -	6135DA	- 1247	B-109	B-125	B-144
	1230	125	16000	1630	*1		1230	125	16000	1630	*1	02 -	6140DA	- 1247	B-109	B-125	B-144
	1480	151	15200	1540	0.93		1220	125	16000	1630	1.12	02 -	6145DA	- 1247	B-109	B-125	B-144
0.980	848	86.5	14700	1500	*1	1.18	848	86.5	14700	1500	*1	02 -	6130DA	- 1479	B-109	B-125	B-144
	979	99.8	14700	1500	*1		979	99.8	14700	1500	*1	02 -	6135DA	- 1479	B-109	B-125	B-144
	1230	125	16000	1630	*1		1230	125	16000	1630	*1	02 -	6140DA	- 1479	B-109	B-125	B-144
	1250	127	16000	1630	*1		1250	127	16000	1630	*1	02 -	6145DA	- 1479	B-109	B-125	B-144
0.784	780	79.5	14700	1500	*1	0.946	780	79.5	14700	1500	*1	02 -	6130DA	- 1849	B-109	B-125	B-144
	940	95.8	14700	1500	*1		940	95.8	14700	1500	*1	02 -	6135DA	- 1849	B-109	B-125	B-144
	1230	125	16000	1630	*1		1230	125	16000	1630	*1	02 -	6140DA	- 1849	B-109	B-125	B-144
	1370	140	15700	1600	*1		1370	140	15700	1600	*1	02 -	6145DA	- 1849	B-109	B-125	B-144
	1740	177	22100	2250	*1		1740	177	22100	2250	*1	02 -	6160DA	- 1849	B-110	B-126	B-145
0.702	912	93.0	14700	1500	*1	0.847	912	93.0	14700	1500	*1	02 -	6130DA	- 2065	B-109	B-125	B-144
	1050	107	14700	1500	*1		1050	107	14700	1500	*1	02 -	6135DA	- 2065	B-109	B-125	B-144
	1230	125	16000	1630	*1		1230	125	16000	1630	*1	02 -	6140DA	- 2065	B-109	B-125	B-144
	1370	140	16000	1630	*1		1370	140	16000	1630	*1	02 -	6145DA	- 2065	B-109	B-125	B-144
	1760	179	22100	2250	*1		1760	179	22100	2250	*1	02 -	6160DA	- 2065	B-110	B-126	B-145
	2450	250	22100	2250	0.86		2030	207	22100	2250	1.04	02 -	6165DA	- 2065	B-110	B-126	B-145
0.572	912	93.0	14700	1500	*1	0.690	912	93.0	14700	1500	*1	02 -	6130DA	- 2537	B-109	B-125	B-144
	1050	107	14700	1500	*1		1050	107	14700	1500	*1	02 -	6135DA	- 2537	B-109	B-125	B-144
	1230	125	16000	1630	*1		1230	125	16000	1630	*1	02 -	6140DA	- 2537	B-109	B-125	B-144
	1370	140	16000	1630	*1		1370	140	16000	1630	*1	02 -	6145DA	- 2537	B-109	B-125	B-144
	1760	179	22100	2250	*1		1760	179	22100	2250	*1	02 -	6160DA	- 2537	B-110	B-126	B-145
	2100	214	22100	2250	*1		2100	214	22100	2250	*1	02 -	6165DA	- 2537	B-110	B-126	B-145
0.476	848	86.5	14700	1500	*1	0.575	848	86.5	14700	1500	*1	02 -	6130DA	- 3045	B-109	B-125	B-144
	979	99.8	14700	1500	*1		979	99.8	14700	1500	*1	02 -	6135DA	- 3045	B-109	B-125	B-144
	1230	125	16000	1630	*1		1230	125	16000	1630	*1	02 -	6140DA	- 3045	B-109	B-125	B-144
	1250	127	16000	1630	*1		1250	127	16000	1630	*1	02 -	6145DA	- 3045	B-109	B-125	B-144
	1760	179	22100	2250	*1		1760	179	22100	2250	*1	02 -	6160DA	- 3045	B-110	B-126	B-145
	2050	209	21800	2220	*1		2050	209	21800	2220	*1	02 -	6165DA	- 3045	B-110	B-126	B-145
	2530	258	29500	3010	*1		2530	258	29500	3010	*1	02 -	6170DA	- 3045	B-110	B-126	B-145
	3610	368	29500	3010	0.87		2990	305	29500	3010	1.05	02 -	6175DA	- 3045	B-110	B-126	B-145
0.417	912	93.0	14700	1500	*1	0.503	912	93.0	14700	1500	*1	02 -	6130DA	- 3481	B-109	B-125	B-144
	1050	107	14700	1500	*1		1050	107	14700	1500	*1	02 -	6135DA	- 3481	B-109	B-125	B-144
	1230	125	16000	1630	*1		1230	125	16000	1630	*1	02 -	6140DA	- 3481	B-109	B-125	B-144
	1370	140	16000	1630	*1		1370	140	16000	1630	*1	02 -	6145DA	- 3481	B-109	B-125	B-144
	1760	179	22100	2250	*1		1760	179	22100	2250	*1	02 -	6160DA	- 3481	B-110	B-126	B-145
	2100	214	22100	2250	*1		2100	214	22100	2250	*1	02 -	6165DA	- 3481	B-110	B-126	B-145
	2530	258	29500	3010	*1		2530	258	29500	3010	*1	02 -	6170DA	- 3481	B-110	B-126	B-145
	3150	321	29500	3010	*1		3150	321	29500	3010	*1	02 -	6175DA	- 3481	B-110	B-126	B-145

1. Combinations in **bold** are the recommended models for operations for 10 hours/day with uniform load (service factor is about 1.0 for motor rating at 50Hz).
2. Motor slippage may affect n_1 and n_2. Refer to technical data for details.
3. CNHM, CHHM, CNFM, CHFM, CNVM, and CVVM indicate types. Refer to page B-10 for details.
4. Lubrication method is different for each model. Refer to "Lubrication" section in page F-4~F-5 for details.
5. "6" at the end of "input capacity symbol" indicates models with 6P motor. Other models come with 4P motor.

Selection Tables Gearmotors

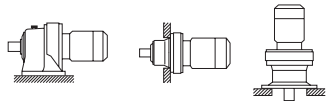

CHHM/CNHM CHFM/CNFM CVVM/CNVM

n_1: Motor Speed

0.2 kW	Hz	50Hz		60Hz	
	P	4	6	4	6
	n_1 r/min	1450	980	1750	1165

50Hz						60Hz						Nomenclature	Page of Dimension Sheet		
Output Speed n_2 [r/min]	Output Torque Tout [N·m]	[kgf·m]	Allowable Radial Load Pro [N]	[kgf]	SF	Output Speed n_2 [r/min]	Output Torque Tout [N·m]	[kgf·m]	Allowable Radial Load Pro [N]	[kgf]	SF	Input Capacity Symbol - Frame Size - Reduction Ratio	CNHM CHHM	CNFM CHFM	CNVM CVVM
0.327	848	86.5	14700	1500	*1	0.394	848	86.5	14700	1500	*1	02 - 6130DA - 4437	B-109	B-125	B-144
	979	99.8	14700	1500	*1		979	99.8	14700	1500	*1	02 - 6135DA - 4437	B-109	B-125	B-144
	1230	125	16000	1630	*1		1230	125	16000	1630	*1	02 - 6140DA - 4437	B-109	B-125	B-144
	1250	127	16000	1630	*1		1250	127	16000	1630	*1	02 - 6145DA - 4437	B-109	B-125	B-144
	1760	179	22100	2250	*1		1760	179	22100	2250	*1	02 - 6160DA - 4437	B-110	B-126	B-145
	2050	209	21800	2220	*1		2050	209	21800	2220	*1	02 - 6165DA - 4437	B-110	B-126	B-145
	2530	258	29500	3010	*1		2530	258	29500	3010	*1	02 - 6170DA - 4437	B-110	B-126	B-145
	3150	321	29500	3010	*1		3150	321	29500	3010	*1	02 - 6175DA - 4437	B-110	B-126	B-145
0.282	848	86.5	14700	1500	*1	0.341	848	86.5	14700	1500	*1	02 - 6130DA - 5133	B-109	B-125	B-144
	979	99.8	14700	1500	*1		979	99.8	14700	1500	*1	02 - 6135DA - 5133	B-109	B-125	B-144
	1230	125	16000	1630	*1		1230	125	16000	1630	*1	02 - 6140DA - 5133	B-109	B-125	B-144
	1250	127	16000	1630	*1		1250	127	16000	1630	*1	02 - 6145DA - 5133	B-109	B-125	B-144
	1760	179	22100	2250	*1		1760	179	22100	2250	*1	02 - 6160DA - 5133	B-110	B-126	B-145
	2050	209	21800	2220	*1		2050	209	21800	2220	*1	02 - 6165DA - 5133	B-110	B-126	B-145
	2530	258	29500	3010	*1		2530	258	29500	3010	*1	02 - 6170DA - 5133	B-110	B-126	B-145
	3150	321	29500	3010	*1		3150	321	29500	3010	*1	02 - 6175DA - 5133	B-110	B-126	B-145
0.235	848	86.5	14700	1500	*1	0.283	848	86.5	14700	1500	*1	02 - 6130DB - 6177	B-109	B-125	B-143
	979	99.8	14700	1500	*1		979	99.8	14700	1500	*1	02 - 6135DB - 6177	B-109	B-125	B-144
	1230	125	16000	1630	*1		1230	125	16000	1630	*1	02 - 6140DB - 6177	B-109	B-125	B-144
	1250	127	16000	1630	*1		1250	127	16000	1630	*1	02 - 6145DB - 6177	B-109	B-125	B-144
	1760	179	22100	2250	*1		1760	179	22100	2250	*1	02 - 6160DA - 6177	B-110	B-126	B-145
	2050	209	21800	2220	*1		2050	209	21800	2220	*1	02 - 6165DA - 6177	B-110	B-126	B-145
	2530	258	29500	3010	*1		2530	258	29500	3010	*1	02 - 6170DA - 6177	B-110	B-126	B-145
	3150	321	29500	3010	*1		3150	321	29500	3010	*1	02 - 6175DA - 6177	B-110	B-126	B-145
0.192	848	86.5	14700	1500	*1	0.231	848	86.5	14700	1500	*1	02 - 6130DB - 7569	B-109	B-125	B-143
	979	99.8	14700	1500	*1		979	99.8	14700	1500	*1	02 - 6135DB - 7569	B-109	B-125	B-144
	1230	125	16000	1630	*1		1230	125	16000	1630	*1	02 - 6140DB - 7569	B-109	B-125	B-144
	1250	127	16000	1630	*1		1250	127	16000	1630	*1	02 - 6145DB - 7569	B-109	B-125	B-144
	1760	179	22100	2250	*1		1760	179	22100	2250	*1	02 - 6160DA - 7569	B-110	B-126	B-145
	2050	209	21800	2220	*1		2050	209	21800	2220	*1	02 - 6165DA - 7569	B-110	B-126	B-145
	2530	258	29500	3010	*1		2530	258	29500	3010	*1	02 - 6170DA - 7569	B-110	B-126	B-145
	3150	321	29500	3010	*1		3150	321	29500	3010	*1	02 - 6175DA - 7569	B-110	B-126	B-145

6. "*2" indicate models manufactured with reducer and motor separately mounted on a common baseplate (horizontal shaft direction) or on an adaptor (vertical shaft direction). Consult us for details, including dimensions.
7. Allowable radial load (Pro) is the value at the midpoint of the slow speed shaft.
8. "*3" indicate models with reduction ratios equal to nominal ratio. Refer to Table A-3 "6000SK Series (Actual Reduction Ratio)" on page A-4 for actual reduction ratio. Indicated reduction ratio is the same as actual reduction ratio for other models.
9. Maintain torque load during operation within "Output torque" in the table for models with "*1" in the SF column. They cannot be operated with 100% motor rating.

Selection Tables Gearmotors

n_1: Motor Speed

0.25 kW	Hz		50Hz		60Hz	
	P		4	6	4	6
	n_1	r/min	1450	980	1750	1165

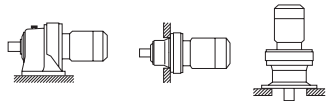

CHHM/CNHM CHFM/CNFM CVVM/CNVM

50Hz						60Hz						Nomenclature				Page of Dimension Sheet		
Output Speed n_2 [r/min]	Output Torque Tout [N·m]	[kgf·m]	Allowable Radial Load Pro [N]	[kgf]	SF	Output Speed n_2 [r/min]	Output Torque Tout [N·m]	[kgf·m]	Allowable Radial Load Pro [N]	[kgf]	SF	Input Capacity Symbol	- Frame Size	-	Reduction Ratio	CNHM CHHM	CNFM CHFM	CNVM CVVM
242	9.39	0.957	**795**	**81.1**	**1.14**	292	7.78	0.793	**749**	**76.3**	**1.14**	**03 -**	**6065**	**-**	**6**	**B-100**	**B-116**	**B-135**
			1390	141	1.39				1310	133	1.39	03 -	6070	-	6	B-100	B-116	B-135
			1390	141	1.63				1310	133	1.63	03 -	6075	-	6	B-100	B-116	B-135
			1930	197	2.37				1810	185	2.37	03 -	6080	-	6	B-100	B-116	B-135
181	12.5	1.28	**908**	**92.5**	**1.14**	219	10.4	1.06	**855**	**87.2**	**1.14**	**03 -**	**6065**	**-**	**8**	**B-100**	**B-116**	**B-135**
			1530	156	1.39				1450	147	1.39	03 -	6070	-	8	B-100	B-116	B-135
			1530	156	1.63				1450	147	1.63	03 -	6075	-	8	B-100	B-116	B-135
			2090	213	2.37				1970	201	2.37	03 -	6080	-	8	B-100	B-116	B-135
132	17.2	1.75	**1180**	**120**	**1.14**	159	14.3	1.45	**1160**	**118**	**1.14**	**03 -**	**6065**	**-**	**11**	**B-100**	**B-116**	**B-135**
			1720	175	1.39				1620	165	1.39	03 -	6070	-	11	B-100	B-116	B-135
			1720	175	1.63				1620	165	1.63	03 -	6075	-	11	B-100	B-116	B-135
			2310	236	2.37				2180	222	2.37	03 -	6080	-	11	B-100	B-116	B-135
112	20.3	2.07	**1180**	**120**	**1.14**	135	16.8	1.72	**1180**	**120**	**1.14**	**03 -**	**6065**	**-**	**13**	**B-100**	**B-116**	**B-135**
			1770	180	1.39				1710	174	1.39	03 -	6070	-	13	B-100	B-116	B-135
			1770	180	1.63				1710	174	1.63	03 -	6075	-	13	B-100	B-116	B-135
			2490	254	2.37				2340	239	2.37	03 -	6080	-	13	B-100	B-116	B-135
96.7	23.5	2.39	**1180**	**120**	**1.14**	117	19.4	1.98	**1180**	**120**	**1.14**	**03 -**	**6065**	**-**	**15**	**B-100**	**B-116**	**B-135**
			1770	180	1.39				1720	175	1.39	03 -	6070	-	15	B-100	B-116	B-135
			1770	180	1.63				1720	175	1.63	03 -	6075	-	15	B-100	B-116	B-135
			2560	261	2.37				2420	247	2.37	03 -	6080	-	15	B-100	B-116	B-135
85.3	26.6	2.71	**1180**	**120**	**1.13**	103	22.0	2.25	**1180**	**120**	**1.14**	**03 -**	**6065**	**-**	**17**	**B-100**	**B-116**	**B-135**
			1770	180	1.39				1770	180	1.39	03 -	6070	-	17	B-100	B-116	B-135
			1770	180	1.63				1770	180	1.63	03 -	6075	-	17	B-100	B-116	B-135
			2560	261	2.37				2540	258	2.37	03 -	6080	-	17	B-100	B-116	B-135
69.0	32.8	3.35	1180	120	0.91	83.3	27.2	2.77	1180	120	0.94	03 -	6065	-	21	B-100	B-116	B-135
			1770	**180**	**1.28**				**1770**	**180**	**1.28**	**03 -**	**6070**	**-**	**21**	**B-100**	**B-116**	**B-135**
			1770	180	1.63				1770	180	1.63	03 -	6075	-	21	B-100	B-116	B-135
			2560	261	1.91				2470	252	1.91	03 -	6080	-	21	B-100	B-116	B-135
			2560	261	2.20				2470	252	2.20	03 -	6085	-	21	B-100	B-116	B-135
58.0	39.1	3.99	**1770**	**180**	**1.18**	70.0	32.4	3.30	**1770**	**180**	**1.18**	**03 -**	**6075**	**-**	**25**	**B-100**	**B-116**	**B-135**
			2560	261	1.36				2540	259	1.36	03 -	6080	-	25	B-100	B-116	B-135
			2560	261	1.90				2540	259	1.90	03 -	6085	-	25	B-100	B-116	B-135
			3340	340	2.68				3340	340	2.68	03 -	6090	-	25	B-100	B-116	B-135
50.0	45.4	4.62	**1770**	**180**	**1.14**	60.3	37.6	3.83	**1770**	**180**	**1.14**	**03 -**	**6075**	**-**	**29**	**B-100**	**B-116**	**B-135**
			2560	261	1.36				2560	261	1.36	03 -	6080	-	29	B-100	B-116	B-135
			2560	261	1.87				2560	261	1.87	03 -	6085	-	29	B-100	B-116	B-135
			3340	340	2.50				3340	340	2.50	03 -	6090	-	29	B-100	B-116	B-135
41.4	54.7	5.58	**1770**	**180**	**1.09**	50.0	45.4	4.62	**1770**	**180**	**1.12**	**03 -**	**6075**	**-**	**35**	**B-100**	**B-116**	**B-135**
			2560	261	1.16				2560	261	1.32	03 -	6080	-	35	B-100	B-116	B-135
			2560	261	1.31				2560	261	1.48	03 -	6085	-	35	B-100	B-116	B-135
			3340	340	2.45				3340	340	2.45	03 -	6090	-	35	B-100	B-116	B-135
33.7	67.3	6.86	1500	152	0.89	40.7	55.7	5.68	1740	178	0.90	03 -	6075	-	43	B-100	B-116	B-135
			2560	**261**	**1.00**				**2560**	**261**	**1.00**	**03 -**	**6080**	**-**	**43**	**B-100**	**B-116**	**B-135**
			2560	261	1.18				2560	261	1.18	03 -	6085	-	43	B-100	B-116	B-135
			3340	340	1.74				3340	340	1.74	03 -	6090	-	43	B-100	B-116	B-135
			3340	340	2.41				3340	340	2.41	03 -	6095	-	43	B-100	B-116	B-135
28.4	79.8	8.13	2490	253	0.96	34.3	66.1	6.74	2560	261	0.96	03 -	6085	-	51	B-100	B-116	B-135
			3340	340	1.33				3340	340	1.33	03 -	6090	-	51	B-100	B-116	B-135
			3340	340	1.63				3340	340	1.69	03 -	6095	-	51	B-100	B-116	B-135
			5400	550	2.24				5400	550	2.24	03 -	6100	-	51	B-101	B-117	B-136
24.6	92.3	9.41	2390	244	0.94	29.7	76.5	7.79	2540	259	0.94	03 -	6085	-	59	B-100	B-116	B-135
			3340	**340**	**1.24**				**3340**	**340**	**1.24**	**03 -**	**6090**	**-**	**59**	**B-100**	**B-116**	**B-135**
			3340	340	1.34				3340	340	1.49	03 -	6095	-	59	B-100	B-116	B-135
			5400	550	2.06				5400	550	2.06	03 -	6100	-	59	B-101	B-117	B-136
			5400	550	2.72				5400	550	2.83	03 -	6105	-	59	B-101	B-117	B-136

1. Combinations in **bold** are the recommended models for operations for 10 hours/day with uniform load (service factor is about 1.0 for motor rating at 50Hz).
2. Motor slippage may affect n_1 and n_2. Refer to technical data for details.
3. CNHM, CHHM, CNFM, CHFM, CNVM, and CVVM indicate types. Refer to page B-10 for details.
4. Lubrication method is different for each model. Refer to "Lubrication" section in page F-4~F-5 for details.
5. "6" at the end of "input capacity symbol" indicates models with 6P motor. Other models come with 4P motor.

Selection Tables Gearmotors

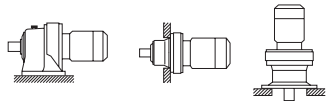

CHHM/CNHM CHFM/CNFM CVVM/CNVM

n_1: Motor Speed

0.25 kW	Hz	50Hz		60Hz	
	P	4	6	4	6
	n_1 r/min	1450	980	1750	1165

50Hz						60Hz						Nomenclature				Page of Dimension Sheet		
Output Speed n_2 [r/min]	Output Torque Tout [N·m]	Output Torque Tout [kgf·m]	Allowable Radial Load Pro [N]	Allowable Radial Load Pro [kgf]	SF	Output Speed n_2 [r/min]	Output Torque Tout [N·m]	Output Torque Tout [kgf·m]	Allowable Radial Load Pro [N]	Allowable Radial Load Pro [kgf]	SF	Input Capacity Symbol	- Frame Size	- Reduction Ratio		CNHM CHHM	CNFM CHFM	CNVM CVVM
			3340	**340**	**1.01**				**3340**	**340**	**1.01**	**03 -**	**6090**	**-**	**71**	**B-100**	**B-116**	**B-135**
20.4	111	11.3	3340	340	1.11	24.6	92	9.4	3340	340	1.20	03 -	6095	-	71	B-100	B-116	B-135
			5400	550	1.74				5400	550	1.74	03 -	6100	-	71	B-101	B-117	B-136
			5400	550	2.02				5400	550	2.24	03 -	6105	-	71	B-101	B-117	B-136
			3340	**340**	**1.05**				**3340**	**340**	**1.20**	**03 -**	**6095**	**-**	**87**	**B-100**	**B-116**	**B-135**
16.7	136	13.9	5400	550	1.73	20.1	113	11.5	5400	550	1.73	03 -	6100	-	87	B-101	B-117	B-136
			5400	550	2.01				5400	550	2.26	03 -	6105	-	87	B-101	B-117	B-136
			3340	340	1.17				3340	340	1.42	03 -	6095DA	-	104	B-108	B-124	B-143
13.9	154	15.7	5400	550	1.62	16.8	128	13.0	5400	550	1.72	03 -	6100DA	-	104	B-108	B-124	B-143
			5400	550	1.72				5400	550	1.72	03 -	6105DA	-	104	B-108	B-124	B-143
12.2	186	19.0	**5400**	**550**	**1.14**	14.7	154	15.7	**5400**	**550**	**1.14**	**03 -**	**6105**	**-**	**119**	B-101	B-117	B-136
			3340	340	0.89				3340	340	1.08	03 -	6095DA	-	121	B-108	B-124	B-143
12.0	179	18.3	5400	550	1.39	14.5	149	15.1	5400	550	1.68	03 -	6100DA	-	121	B-108	B-124	B-143
			5400	550	1.72				5400	550	1.72	03 -	6105DA	-	121	B-108	B-124	B-143
			9810	1000	2.93				9810	1000	3.53	03 -	6120DB	-	121	B-108	B-124	B-143
	150	15.3	3340	340	*1		150	15.3	3340	340	*1	03 -	6090DA	-	143	B-108	B-124	B-143
			3340	340	0.87				3340	340	1.04	03 -	6095DA	-	143	B-108	B-124	B-143
			5400	550	1.18				5400	550	1.42	03 -	6100DA	-	143	B-108	B-124	B-143
10.1	212	21.6	5400	550	1.42	12.2	176	17.9	5400	550	1.71	03 -	6105DA	-	143	B-108	B-124	B-143
			9810	1000	1.72				9810	1000	1.72	03 -	6120DA	-	143	B-108	B-124	B-143
			9810	1000	2.48				9810	1000	2.99	03 -	6120DB	-	143	B-108	B-124	B-143
			9810	1000	2.97				9810	1000	3.59	03 -	6125DB	-	143	B-108	B-124	B-143
	200	20.4	3340	340	*1		200	20.4	3340	340	*1	03 -	6095DA	-	165	B-108	B-124	B-143
			3340	340	0.82				3340	340	0.98	03 -	6095DA	-	165	B-108	B-124	B-143
			5400	**550**	**1.02**				**5400**	**550**	**1.23**	**03 -**	**6100DA**	**-**	**165**	**B-108**	**B-124**	**B-143**
8.79	245	24.9	5400	550	1.23	10.6	203	20.7	5400	550	1.48	03 -	6105DA	-	165	B-108	B-124	B-143
			9810	1000	1.72				9810	1000	1.72	03 -	6120DA	-	165	B-108	B-124	B-143
			9810	1000	2.15				9810	1000	2.59	03 -	6120DB	-	165	B-108	B-124	B-143
			9810	1000	2.58				9810	1000	3.11	03 -	6125DB	-	165	B-108	B-124	B-143
	200	20.4	3340	340	*1		200	20.4	3340	340	*1	03 -	6095DA	-	195	B-108	B-124	B-143
			5400	**550**	**1.04**				**5400**	**550**	**1.25**	**03 -**	**6105DA**	**-**	**195**	**B-108**	**B-124**	**B-143**
7.44	289	29.5	9810	1000	1.72	8.97	239	24.4	9810	1000	1.72	03 -	6120DA	-	195	B-108	B-124	B-143
			9810	1000	1.82				9810	1000	2.19	03 -	6120DB	-	195	B-108	B-124	B-143
			9810	1000	2.18				9810	1000	2.63	03 -	6125DB	-	195	B-108	B-124	B-143
			14700	1500	2.70				14700	1500	3.26	03 -	6130DB	-	195	B-109	B-125	B-144
	250	25.5	5400	550	*1		250	25.5	5400	550	*1	03 -	6100DA	-	231	B-108	B-124	B-143
			4940	504	0.88				5400	550	1.06	03 -	6105DA	-	231	B-108	B-124	B-143
			9810	1000	1.52				9810	1000	1.72	03 -	6120DA	-	231	B-108	B-124	B-143
			9810	1000	1.52				9810	1000	1.84	03 -	6120DB	-	231	B-108	B-124	B-143
6.28	342	34.9	9810	1000	1.72	7.58	284	28.9	9810	1000	1.72	03 -	6125DA	-	231	B-108	B-124	B-143
			9810	1000	1.84				9810	1000	2.22	03 -	6125DB	-	231	B-108	B-124	B-143
			14700	1500	2.28				14700	1500	2.75	03 -	6130DB	-	231	B-109	B-125	B-144
			14700	1500	2.75				14700	1500	3.31	03 -	6135DB	-	231	B-109	B-125	B-144
	300	30.6	5400	550	*1		300	30.6	5400	550	*1	03 -	6105DA	-	273	B-108	B-124	B-143
			9810	1000	1.29				9810	1000	1.56	03 -	6120DA	-	273	B-108	B-124	B-143
			9810	1000	1.56				9810	1000	1.72	03 -	6125DA	-	273	B-108	B-124	B-143
5.31	405	41.2	9810	1000	1.56	6.41	335	34.2	9810	1000	1.88	03 -	6125DB	-	273	B-108	B-124	B-143
			14700	1500	1.72				14700	1500	1.72	03 -	6130DA	-	273	B-109	B-125	B-144
			14700	1500	1.93				14700	1500	2.33	03 -	6130DB	-	273	B-109	B-125	B-144
			14700	1500	2.32				14700	1500	2.80	03 -	6135DB	-	273	B-109	B-125	B-144

6. "*2" indicate models manufactured with reducer and motor separately mounted on a common baseplate (horizontal shaft direction) or on an adaptor (vertical shaft direction). Consult us for details, including dimensions.
7. Allowable radial load (Pro) is the value at the midpoint of the slow speed shaft.
8. "*3" indicate models with reduction ratios equal to nominal ratio. Refer to Table A-3 "6000SK Series (Actual Reduction Ratio)" on page A-4 for actual reduction ratio. Indicated reduction ratio is the same as actual reduction ratio for other models.
9. Maintain torque load during operation within "Output torque" in the table for models with "*1" in the SF column. They cannot be operated with 100% motor rating.

Selection Tables Gearmotors

n1: Motor Speed

0.25 kW	Hz		50Hz		60Hz	
	P		4	6	4	6
	n_1	r/min	1450	980	1750	1165

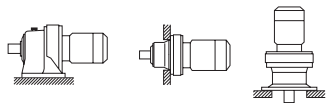

CHHM/CNHM CHFM/CNFM CVVM/CNVM

50Hz						60Hz						Nomenclature				Page of Dimension Sheet		
Output Speed n_2 [r/min]	Output Torque Tout [N·m]	[kgf·m]	Allowable Radial Load Pro [N]	[kgf]	SF	Output Speed n_2 [r/min]	Output Torque Tout [N·m]	[kgf·m]	Allowable Radial Load Pro [N]	[kgf]	SF	Input Capacity Symbol	- Frame Size	- Reduction Ratio		CNHM CHHM	CNFM CHFM	CNVM CVVM
4.55	473	48.2	9810	1000	1.10	5.49	392	39.9	9810	1000	1.33	03 -	6120DA	-	319	B-108	B-124	B-143
			9810	1000	1.33				9810	1000	1.61	03 -	6125DA	-	319	B-108	B-124	B-143
			14700	1500	1.65				14700	1500	1.72	03 -	6130DA	-	319	B-109	B-125	B-144
			14700	1500	1.65				14700	1500	1.99	03 -	6130DB	-	319	B-109	B-125	B-144
			14700	1500	1.72				14700	1500	1.72	03 -	6135DA	-	319	B-109	B-125	B-144
			14700	1500	1.99				14700	1500	2.40	03 -	6135DB	-	319	B-109	B-125	B-144
			16000	1630	2.59				16000	1630	3.13	03 -	6140DB	-	319	B-109	B-125	B-144
			16000	1630	2.90				16000	1630	3.50	03 -	6145DB	-	319	B-109	B-125	B-144
3.85	559	56.9	9810	1000	1.13	4.64	463	47.2	9810	1000	1.36	03 -	6125DA	-	377	B-108	B-124	B-143
			14700	1500	1.40				14700	1500	1.69	03 -	6130DA	-	377	B-109	B-125	B-144
			14700	1500	1.68				14700	1500	1.72	03 -	6135DA	-	377	B-109	B-125	B-144
			14700	1500	1.68				14700	1500	2.03	03 -	6135DB	-	377	B-109	B-125	B-144
			16000	1630	1.72				16000	1630	1.72	03 -	6140DA	-	377	B-109	B-125	B-144
			16000	1630	2.19				16000	1630	2.65	03 -	6140DB	-	377	B-109	B-125	B-144
			16000	1630	2.45				16000	1630	2.96	03 -	6145DB	-	377	B-109	B-125	B-144
3.07	525	53.5	9810	1000	*1	3.70	525	53.5	9810	1000	*1	03 -	6120DA	-	473	B-108	B-124	B-143
	701	71.5	9810	1000	0.90		581	59.2	9810	1000	1.08	03 -	6125DA	-	473	B-108	B-124	B-143
			14700	1500	1.11				14700	1500	1.34	03 -	6130DA	-	473	B-109	B-125	B-144
			14700	1500	1.34				14700	1500	1.62	03 -	6135DA	-	473	B-109	B-125	B-144
			16000	1630	1.72				16000	1630	1.72	03 -	6140DA	-	473	B-109	B-125	B-144
			16000	1630	1.75				16000	1630	2.11	03 -	6140DB	-	473	B-109	B-125	B-144
			16000	1630	1.95				16000	1630	2.36	03 -	6145DB	-	473	B-109	B-125	B-144
2.59	630	64.2	9810	1000	*1	3.13	630	64.2	9810	1000	*1	03 -	6125DA	-	559	B-108	B-124	B-143
	828	84.4	14700	1500	1.13		686	70.0	14700	1500	1.37	03 -	6135DA	-	559	B-109	B-125	B-144
			16000	1630	1.48				16000	1630	1.72	03 -	6140DA	-	559	B-109	B-125	B-144
			16000	1630	1.48				16000	1630	1.78	03 -	6140DB	-	559	B-109	B-125	B-144
			16000	1630	1.65				16000	1630	1.72	03 -	6145DA	-	559	B-109	B-125	B-144
			16000	1630	1.65				16000	1630	2.00	03 -	6145DB	-	559	B-109	B-125	B-144
2.23	962	98.0	14700	1500	1.09	2.70	797	81.2	14700	1500	1.32	03 -	6135DA	-	649	B-109	B-125	B-144
			16000	1630	1.27				16000	1630	1.54	03 -	6140DA	-	649	B-109	B-125	B-144
			16000	1630	1.42				16000	1630	1.72	03 -	6145DA	-	649	B-109	B-125	B-144
1.98	780	79.5	14700	1500	*1	2.39	780	79.5	14700	1500	*1	03 -	6130DA	-	731	B-109	B-125	B-144
	1080	110	14700	1500	0.87		898	91.5	14700	1500	1.05	03 -	6135DA	-	731	B-109	B-125	B-144
			16000	1630	1.13				16000	1630	1.36	03 -	6140DA	-	731	B-109	B-125	B-144
			16000	1630	1.26				16000	1630	1.53	03 -	6145DA	-	731	B-109	B-125	B-144
1.72	940	95.8	14700	1500	*1	2.08	940	95.8	14700	1500	*1	03 -	6135DA	-	841	B-109	B-125	B-144
	1250	127	**16000**	**1630**	**1.10**		1030	105	**16000**	**1630**	**1.21**	**03 -**	**6145DA**	**-**	**841**	**B-109**	**B-125**	**B-144**
			16000	1630	1.10				16000	1630	1.33	03 -	6145DB	-	841	B-109	B-125	B-144
1.45	1050	107	14700	1500	*1	1.74	1050	107	14700	1500	*1	03 -	6135DA	-	1003	B-109	B-125	B-144
	1230	125	16000	1630	*1		1230	125	16000	1630	*1	03 -	6140DA	-	1003	B-109	B-125	B-144
	1490	152	16000	1630	0.92		1230	126	16000	1630	1.11	03 -	6145DA	-	1003	B-109	B-125	B-144
1.16	1370	140	15700	1600	*1	1.40	1370	140	15700	1600	*1	03 -	6145DA	-	1247	B-109	B-125	B-144
0.702	2100	214	22100	2250	*1	0.847	2100	214	22100	2250	*1	03 -	6165DA	-	2065	B-110	B-126	B-145
0.572	2530	258	29500	3010	*1	0.690	2530	258	29500	3010	*1	03 -	6170DA	-	2537	B-110	B-126	B-145
0.476	3150	321	29500	3010	*1	0.575	3150	321	29500	3010	*1	03 -	6175DA	-	3045	B-110	B-126	B-145

1. Combinations in **bold** are the recommended models for operations for 10 hours/day with uniform load (service factor is about 1.0 for motor rating at 50Hz).
2. Motor slippage may affect n_1 and n_2. Refer to technical data for details.
3. CNHM, CHHM, CNFM, CHFM, CNVM, and CVVM indicate types. Refer to page B-10 for details.
4. Lubrication method is different for each model. Refer to "Lubrication" section in page F-4~F-5 for details.
5. "6" at the end of "input capacity symbol" indicates models with 6P motor. Other models come with 4P motor.

Selection Tables Gearmotors

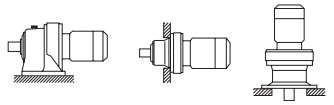

CHHM/CNHM CHFM/CNFM CVVM/CNVM

n1: Motor Speed

0.4 kW	Hz	50Hz		60Hz	
	P	4	6	4	6
	n1 r/min	1450	980	1750	1165

50Hz						60Hz						Nomenclature				Page of Dimension Sheet		
Output Speed n_2 [r/min]	Output Torque Tout [N·m]	[kgf·m]	Allowable Radial Load Pro [N]	[kgf]	SF	Output Speed n_2 [r/min]	Output Torque Tout [N·m]	[kgf·m]	Allowable Radial Load Pro [N]	[kgf]	SF	Input Capacity Symbol	- Frame Size	- Reduction Ratio		CNHM CHHM	CNFM CHFM	CNVM CVVM
580	6.26	0.638	1180	120	2.78	700	5.18	0.528	1120	114	2.78	05 -	6070SK	- 2.5 *3		B-98	-	B-133
			1180	120	3.47				1120	114	3.47	05 -	6075SK	- 2.5 *3		B-98	-	B-133
			1310	134	4.12				1250	127	4.12	05 -	6080SK	- 2.5 *3		B-98	-	B-133
483	7.51	0.765	1240	126	2.65	583	6.22	0.634	1180	120	2.65	05 -	6070SK	- 3 *3		B-98	-	B-133
			1240	126	3.31				1180	120	3.31	05 -	6075SK	- 3 *3		B-98	-	B-133
			1380	141	4.12				1300	133	4.12	05 -	6080SK	- 3 *3		B-98	-	B-133
363	10.0	1.02	1340	137	2.34	438	8.29	0.846	1290	131	2.34	05 -	6070SK	- 4 *3		B-98	-	B-133
			1340	137	2.92				1290	131	2.92	05 -	6075SK	- 4 *3		B-98	-	B-133
			1500	153	4.12				1420	145	4.12	05 -	6080SK	- 4 *3		B-98	-	B-133
290	12.5	1.28	1370	140	2.22	350	10.4	1.06	1290	132	2.22	05 -	6070SK	- 5 *3		B-98	-	B-133
			1370	140	2.78				1290	132	2.78	05 -	6075SK	- 5 *3		B-98	-	B-133
			1640	167	3.88				1550	158	3.88	05 -	6080SK	- 5 *3		B-98	-	B-133
242	15.0	1.53	1370	140	1.96	292	12.4	1.27	1290	132	1.96	05 -	6070SK	- 6 *3		B-98	-	B-133
			1370	140	2.45				1290	132	2.45	05 -	6075SK	- 6 *3		B-98	-	B-133
			1720	175	3.24				1630	166	3.24	05 -	6080SK	- 6 *3		B-98	-	B-133
			1720	175	4.05				1630	166	4.05	05 -	6085SK	- 6 *3		B-98	-	B-133
			1370	**140**	**1.02**				**1290**	**132**	**1.02**	**05 -**	**6075**	**- 6**		**B-100**	**B-116**	**B-135**
			1920	196	1.48				1810	184	1.48	05 -	6080	- 6		B-100	B-116	B-135
			1920	196	1.95				1810	184	1.95	05 -	6085	- 6		B-100	B-116	B-135
			2860	292	2.88				2690	275	2.88	05 -	6090	- 6		B-100	B-116	B-135
181	20.0	2.04	1510	154	1.47	219	16.6	1.69	1430	145	1.47	05 -	6070SK	- 8 *3		B-98	-	B-133
			1510	154	1.84				1430	145	1.84	05 -	6075SK	- 8 *3		B-98	-	B-133
			1820	186	2.74				1730	176	2.74	05 -	6080SK	- 8 *3		B-98	-	B-133
			1820	186	3.43				1730	176	3.43	05 -	6085SK	- 8 *3		B-98	-	B-133
			3280	334	3.76				3110	317	3.76	05 -	6090SK	- 8 *3		B-98	-	B-133
			3280	334	4.43				3110	317	4.43	05 -	6095SK	- 8 *3		B-98	-	B-133
			1510	**154**	**1.02**				**1430**	**145**	**1.02**	**05 -**	**6075**	**- 8**		**B-100**	**B-116**	**B-135**
			2080	212	1.48				1960	200	1.48	05 -	6080	- 8		B-100	B-116	B-135
			2080	212	1.95				1960	200	1.95	05 -	6085	- 8		B-100	B-116	B-135
			3190	326	2.88				3000	306	2.88	05 -	6090	- 8		B-100	B-116	B-135
145	25.0	2.55	**1680**	**171**	**1.13**	175	20.7	2.11	**1590**	**162**	**1.13**	**05 -**	**6070SK**	**- 10 *3**		**B-98**	**-**	**B-133**
			1680	171	1.42				1590	162	1.42	05 -	6075SK	- 10 *3		B-98	-	B-133
			1930	197	2.20				1840	188	2.20	05 -	6080SK	- 10 *3		B-98	-	B-133
			1930	197	2.75				1840	188	2.75	05 -	6085SK	- 10 *3		B-98	-	B-133
			3590	366	3.50				3390	346	3.50	05 -	6090SK	- 10 *3		B-98	-	B-133
			3590	366	4.43				3390	346	4.43	05 -	6095SK	- 10 *3		B-98	-	B-133
132	27.5	2.81	**1680**	**171**	**1.02**	159	22.8	2.33	**1590**	**162**	**1.02**	**05 -**	**6075**	**- 11**		**B-100**	**B-116**	**B-135**
			2300	234	1.48				2160	220	1.48	05 -	6080	- 11		B-100	B-116	B-135
			2300	234	1.95				2160	220	1.95	05 -	6085	- 11		B-100	B-116	B-135
			3340	340	2.88				3340	340	2.88	05 -	6090	- 11		B-100	B-116	B-135
112	32.5	3.32	**1770**	**180**	**1.02**	135	27.0	2.75	**1680**	**171**	**1.02**	**05 -**	**6075**	**- 13**		**B-100**	**B-116**	**B-135**
			2470	251	1.48				2320	237	1.48	05 -	6080	- 13		B-100	B-116	B-135
			2470	251	1.95				2320	237	1.95	05 -	6085	- 13		B-100	B-116	B-135
			3340	340	2.88				3340	340	2.88	05 -	6090	- 13		B-100	B-116	B-135
96.7	37.5	3.83	**1770**	**180**	**1.02**	117	31.1	3.17	**1680**	**171**	**1.02**	**05 -**	**6075**	**- 15**		**B-100**	**B-116**	**B-135**
			2550	260	1.48				2400	245	1.48	05 -	6080	- 15		B-100	B-116	B-135
			2550	260	1.95				2400	245	1.95	05 -	6085	- 15		B-100	B-116	B-135
			3340	340	2.88				3340	340	2.88	05 -	6090	- 15		B-100	B-116	B-135
85.3	42.5	4.34	**1770**	**180**	**1.02**	103	35.3	3.59	**1770**	**180**	**1.02**	**05 -**	**6075**	**- 17**		**B-100**	**B-116**	**B-135**
			2560	261	1.48				2510	256	1.48	05 -	6080	- 17		B-100	B-116	B-135
			2560	261	1.95				2510	256	1.95	05 -	6085	- 17		B-100	B-116	B-135
			3340	340	2.88				3340	340	2.88	05 -	6090	- 17		B-100	B-116	B-135
69.0	52.6	5.36	**1770**	**180**	**1.02**	83.3	43.5	4.44	**1770**	**180**	**1.02**	**05 -**	**6075**	**- 21**		**B-100**	**B-116**	**B-135**
			2560	261	1.20				2450	250	1.20	05 -	6080	- 21		B-100	B-116	B-135
			2560	261	1.38				2450	250	1.38	05 -	6085	- 21		B-100	B-116	B-135
			3340	340	1.90				3340	340	1.90	05 -	6090	- 21		B-100	B-116	B-135

6. "*2" indicate models manufactured with reducer and motor separately mounted on a common baseplate (horizontal shaft direction) or on an adaptor (vertical shaft direction). Consult us for details, including dimensions.
7. Allowable radial load (Pro) is the value at the midpoint of the slow speed shaft.
8. "*3" indicate models with reduction ratios equal to nominal ratio. Refer to Table A-3 "6000SK Series (Actual Reduction Ratio)" on page A-4 for actual reduction ratio. Indicated reduction ratio is the same as actual reduction ratio for other models.
9. Maintain torque load during operation within "Output torque" in the table for models with "*1" in the SF column. They cannot be operated with 100% motor rating.

Selection Tables Gearmotors

n_1: Motor Speed

0.4 kW	Hz		50Hz		60Hz	
	P		4	6	4	6
	n_1	r/min	1450	980	1750	1165

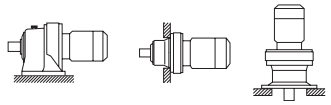

CHHM/CNHM CHFM/CNFM CVVM/CNVM

50Hz						60Hz						Nomenclature			Page of Dimension Sheet		
Output Speed n_2 [r/min]	Output Torque Tout [N·m]	[kgf·m]	Allowable Radial Load Pro [N]	[kgf]	SF	Output Speed n_2 [r/min]	Output Torque Tout [N·m]	[kgf·m]	Allowable Radial Load Pro [N]	[kgf]	SF	Input Capacity Symbol	- Frame Size	- Reduction Ratio	CNHM CHHM	CNFM CHFM	CNVM CVVM
			2560	**261**	**1.19**				**2520**	**256**	**1.19**	**05 -**	**6085**	**- 25**	**B-100**	**B-116**	**B-135**
58.0	62.6	6.38	3340	340	1.68	70.0	51.8	5.28	3340	340	1.68	05 -	6090	- 25	B-100	B-116	B-135
			3340	340	2.17				3340	340	2.17	05 -	6095	- 25	B-100	B-116	B-135
			2560	**261**	**1.17**				**2560**	**261**	**1.17**	**05 -**	**6085**	**- 29**	**B-100**	**B-116**	**B-135**
50.0	72.6	7.40	3340	340	1.56	60.3	60.1	6.13	3340	340	1.56	05 -	6090	- 29	B-100	B-116	B-135
			3340	340	1.96				3340	340	1.96	05 -	6095	- 29	B-100	B-116	B-135
			2560	261	0.82				2560	261	0.93	05 -	6085	- 35	B-100	B-116	B-135
			3340	340	1.53				3340	340	1.53	05 -	6090	- 35	B-100	B-116	B-135
41.4	87.6	8.93	3340	340	1.90	50.0	72.6	7.40	3340	340	1.90	05 -	6095	- 35	B-100	B-116	B-135
			5400	550	2.44				5400	550	2.44	05 -	6100	- 35	B-101	B-117	B-136
			5400	550	3.00				5400	550	3.00	05 -	6105	- 35	B-101	B-117	B-136
			3340	**340**	**1.09**				**3340**	**340**	**1.09**	**05 -**	**6090**	**- 43**	**B-100**	**B-116**	**B-135**
			3340	340	1.51				3340	340	1.51	05 -	6095	- 43	B-100	B-116	B-135
33.7	108	11.0	5400	550	1.95	40.7	89.2	9.09	5400	550	1.95	05 -	6100	- 43	B-101	B-117	B-136
			5400	550	2.70				5400	550	2.70	05 -	6105	- 43	B-101	B-117	B-136
			3320	**339**	**1.02**				**3340**	**340**	**1.06**	**05 -**	**6095**	**- 51**	**B-100**	**B-116**	**B-135**
			5400	550	1.40				5400	550	1.40	05 -	6100	- 51	B-101	B-117	B-136
28.4	128	13.0	5400	550	1.94	34.3	106	10.8	5400	550	1.94	05 -	6105	- 51	B-101	B-117	B-136
			7610	776	2.36				7610	776	2.36	05 -	6110	- 51	B-101	B-117	B-136
			7610	776	2.78				7610	776	2.78	05 -	6115	- 51	B-101	B-117	B-136
			3300	336	0.84				3340	340	0.93	05 -	6095	- 59	B-100	B-116	B-135
			5400	**550**	**1.29**				**5400**	**550**	**1.29**	**05 -**	**6100**	**- 59**	**B-101**	**B-117**	**B-136**
24.6	148	15.1	5400	550	1.70	29.7	122	12.5	5400	550	1.77	05 -	6105	- 59	B-101	B-117	B-136
			7610	776	2.15				7610	776	2.15	05 -	6110	- 59	B-101	B-117	B-136
			7610	776	2.53				7610	776	2.53	05 -	6115	- 59	B-101	B-117	B-136
			5400	**550**	**1.09**				**5400**	**550**	**1.09**	**05 -**	**6100**	**- 71**	**B-101**	**B-117**	**B-136**
			5400	550	1.27				5400	550	1.40	05 -	6105	- 71	B-101	B-117	B-136
			7610	776	1.67				7610	776	1.67	05 -	6110	- 71	B-101	B-117	B-136
20.4	178	18.1	7610	776	1.90	24.6	147	15.0	7610	776	1.90	05 -	6115	- 71	B-101	B-117	B-136
			9810	1000	2.39				9810	1000	2.39	05 -	6120	- 71	B-101	B-117	B-136
			9810	1000	2.85				9810	1000	3.00	05 -	6125	- 71	B-101	B-117	B-136
			5400	**550**	**1.08**				**5400**	**550**	**1.08**	**05 -**	**6100**	**- 87**	**B-101**	**B-117**	**B-136**
			5400	550	1.26				5400	550	1.41	05 -	6105	- 87	B-101	B-117	B-136
			7610	776	1.65				7610	776	1.65	05 -	6110	- 87	B-101	B-117	B-136
16.7	218	22.2	7610	776	1.90	20.1	180	18.4	7610	776	1.90	05 -	6115	- 87	B-101	B-117	B-136
			9810	1000	2.36				9810	1000	2.36	05 -	6120	- 87	B-101	B-117	B-136
			9810	1000	2.58				9810	1000	2.83	05 -	6125	- 87	B-101	B-117	B-136
	150	15.3	3340	340	*1		150	15.3	3340	340	*1	05 -	6090DA	- 104	B-108	B-124	B-143
	181	18.4	3340	340	*1		181	18.4	3340	340	*1	05 -	6095DA	- 104	B-108	B-124	B-143
13.9			**5400**	**550**	**1.01**	16.8			**5400**	**550**	**1.07**	**05 -**	**6100DA**	**- 104**	B-108	B-124	B-143
	247	25.1	5400	550	1.07		204	20.8	5400	550	1.07	05 -	6105DA	- 104	B-108	B-124	B-143
			9810	1000	2.13				9810	1000	2.57	05 -	6120DB	- 104	B-108	B-124	B-143
			9810	1000	2.55				9810	1000	3.08	05 -	6125DB	- 104	B-108	B-124	B-143
	150	15.3	3340	340	*1		150	15.3	3340	340	*1	05 -	6090DA	- 121	B-108	B-124	B-143
	160	16.4	3340	340	*1		160	16.4	3340	340	*1	05 -	6095DA	- 121	B-108	B-124	B-143
12.0			**5400**	**550**	**1.07**	14.5			**5400**	**550**	**1.07**	**05 -**	**6105DA**	**- 121**	B-108	B-124	B-143
	287	29.2	9810	1000	1.83		238	24.2	9810	1000	2.21	05 -	6120DB	- 121	B-108	B-124	B-143
			9810	1000	2.17				9810	1000	2.62	05 -	6125DB	- 121	B-108	B-124	B-143
			14700	1500	2.72				14700	1500	3.28	05 -	6130DB	- 121	B-109	B-125	B-144

1. Combinations in **bold** are the recommended models for operations for 10 hours/day with uniform load (service factor is about 1.0 for motor rating at 50Hz).
2. Motor slippage may affect n_1 and n_2. Refer to technical data for details.
3. CNHM, CHHM, CNFM, CHFM, CNVM, and CVVM indicate types. Refer to page B-10 for details.
4. Lubrication method is different for each model. Refer to "Lubrication" section in page F-4~F-5 for details.
5. "6" at the end of "input capacity symbol" indicates models with 6P motor. Other models come with 4P motor.

Selection Tables Gearmotors

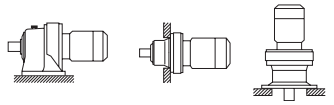

CHHM/CNHM CHFM/CNFM CVVM/CNVM

0.4 kW

n_1: Motor Speed

Hz	50Hz		60Hz	
P	4	6	4	6
n_1 r/min	1450	980	1750	1165

50Hz						60Hz						Nomenclature	Page of Dimension Sheet		
Output Speed n_2 [r/min]	Output Torque Tout [N·m]	[kgf·m]	Allowable Radial Load Pro [N]	[kgf]	SF	Output Speed n_2 [r/min]	Output Torque Tout [N·m]	[kgf·m]	Allowable Radial Load Pro [N]	[kgf]	SF	Input Capacity Symbol - Frame Size - Reduction Ratio	CNHM CHHM	CNFM CHFM	CNVM CVVM
10.1	183	18.7	3340	340	*1	12.2	183	18.7	3340	340	*1	05 - 6095DA - 143	B-108	B-124	B-143
	250	25.5	5400	550	*1		250	25.5	5400	550	*1	05 - 6100DA - 143	B-108	B-124	B-143
	339	34.6	5400	550	0.88		281	28.6	5400	550	1.07	05 - 6105DA - 143	B-108	B-124	B-143
			9810	**1000**	**1.07**				**9810**	**1000**	**1.07**	**05 - 6120DA - 143**	B-108	B-124	B-143
			9810	1000	1.55				9810	1000	1.87	05 - 6120DB - 143	B-108	B-124	B-143
			9810	1000	1.86				9810	1000	2.24	05 - 6125DB - 143	B-108	B-124	B-143
			14700	1500	2.30				14700	1500	2.78	05 - 6130DB - 143	B-109	B-125	B-144
			14700	1500	2.77				14700	1500	3.35	05 - 6135DB - 143	B-109	B-125	B-144
8.79	250	25.5	5400	550	*1	10.6	250	25.5	5400	550	*1	05 - 6100DA - 165	B-108	B-124	B-143
	300	30.6	5400	550	*1		300	30.6	5400	550	*1	05 - 6105DA - 165	B-108	B-124	B-143
	391	39.9	**9810**	**1000**	**1.07**		324	33.0	**9810**	**1000**	**1.07**	**05 - 6120DA - 165**	**B-108**	**B-124**	**B-143**
			9810	1000	1.34				9810	1000	1.62	05 - 6120DB - 165	B-108	B-124	B-143
			9810	1000	1.61				9810	1000	1.94	05 - 6125DB - 165	B-108	B-124	B-143
			14700	1500	1.99				14700	1500	2.41	05 - 6130DB - 165	B-109	B-125	B-144
			14700	1500	2.40				14700	1500	2.90	05 - 6135DB - 165	B-109	B-125	B-144
7.44	250	25.5	5400	550	*1	8.97	250	25.5	5400	550	*1	05 - 6100DA - 195	B-108	B-124	B-143
	300	30.6	5400	550	*1		300	30.6	5400	550	*1	05 - 6105DA - 195	B-108	B-124	B-143
	462	47.1	**9810**	**1000**	**1.07**		383	39.1	**9810**	**1000**	**1.07**	**05 - 6120DA - 195**	**B-108**	**B-124**	**B-143**
			9810	1000	1.14				9810	1000	1.37	05 - 6120DB - 195	B-108	B-124	B-143
			9810	1000	1.36				9810	1000	1.64	05 - 6125DB - 195	B-108	B-124	B-143
			14700	1500	1.69				14700	1500	2.04	05 - 6130DB - 195	B-109	B-125	B-144
			14700	1500	2.03				14700	1500	2.45	05 - 6135DB - 195	B-109	B-125	B-144
			16000	1630	2.65				16000	1630	3.20	05 - 6140DB - 195	B-109	B-125	B-144
			16000	1630	2.94				16000	1630	3.54	05 - 6145DB - 195	B-109	B-125	B-144
6.28	300	30.6	5400	550	*1	7.58	300	30.6	5400	550	*1	05 - 6105DA - 231	B-108	B-124	B-143
	548	55.8	**9810**	**1000**	**1.07**		454	46.3	**9810**	**1000**	**1.07**	**05 - 6125DA - 231**	**B-108**	**B-124**	**B-143**
			9810	1000	1.15				9810	1000	1.39	05 - 6125DB - 231	B-108	B-124	B-143
			14700	1500	1.42				14700	1500	1.72	05 - 6130DB - 231	B-109	B-125	B-144
			14700	1500	1.72				14700	1500	2.07	05 - 6135DB - 231	B-109	B-125	B-144
			16000	1630	2.24				16000	1630	2.70	05 - 6140DB - 231	B-109	B-125	B-144
			16000	1630	2.44				16000	1630	2.95	05 - 6145DB - 231	B-109	B-125	B-144
5.31	522	53.2	9810	1000	*1	6.41	522	53.2	9810	1000	*1	05 - 6120DA - 273	B-108	B-124	B-143
	647	66.0	9810	1000	0.97		536	54.7	9810	1000	1.07	05 - 6125DA - 273	B-108	B-124	B-143
			9810	1000	0.97				9810	1000	1.17	05 - 6125DB - 273	B-108	B-124	B-143
			14700	**1500**	**1.07**				**14700**	**1500**	**1.07**	**05 - 6130DA - 273**	**B-109**	**B-125**	**B-144**
			14700	1500	1.21				14700	1500	1.45	05 - 6130DB - 273	B-109	B-125	B-144
			14700	1500	1.45				14700	1500	1.75	05 - 6135DB - 273	B-109	B-125	B-144
			16000	1630	1.89				16000	1630	2.28	05 - 6140DB - 273	B-109	B-125	B-144
			16000	1630	2.07				16000	1630	2.49	05 - 6145DB - 273	B-109	B-125	B-144
			22100	2250	2.71				22100	2250	3.27	05 - 6160DA - 273	B-110	B-126	B-145
4.55	520	53.0	9810	1000	*1	5.49	520	53.0	9810	1000	*1	05 - 6120DA - 319	B-108	B-124	B-143
	756	77.1	9810	1000	0.83		627	63.9	9810	1000	1.01	05 - 6125DA - 319	B-108	B-124	B-143
			14700	**1500**	**1.03**				**14700**	**1500**	**1.07**	**05 - 6130DA - 319**	**B-109**	**B-125**	**B-144**
			14700	1500	1.03				14700	1500	1.24	05 - 6130DB - 319	B-109	B-125	B-144
			14700	1500	1.07				14700	1500	1.07	05 - 6135DA - 319	B-109	B-125	B-144
			14700	1500	1.24				14700	1500	1.50	05 - 6135DB - 319	B-109	B-125	B-144
			16000	1630	1.62				16000	1630	1.95	05 - 6140DB - 319	B-109	B-125	B-144
			16000	1630	1.81				16000	1630	2.19	05 - 6145DB - 319	B-109	B-125	B-144
			22100	2250	2.32				22100	2250	2.80	05 - 6160DA - 319	B-110	B-126	B-145
			22100	2250	2.78				22100	2250	3.35	05 - 6165DA - 319	B-110	B-126	B-145

6. "*2" indicate models manufactured with reducer and motor separately mounted on a common baseplate (horizontal shaft direction) or on an adaptor (vertical shaft direction). Consult us for details, including dimensions.
7. Allowable radial load (Pro) is the value at the midpoint of the slow speed shaft.
8. "*3" indicate models with reduction ratios equal to nominal ratio. Refer to Table A-3 "6000SK Series (Actual Reduction Ratio)" on page A-4 for actual reduction ratio. Indicated reduction ratio is the same as actual reduction ratio for other models.
9. Maintain torque load during operation within "Output torque" in the table for models with "*1" in the SF column. They cannot be operated with 100% motor rating.

Selection Tables Gearmotors

0.4 kW

n_1: Motor Speed

Hz	50Hz		60Hz	
P	4	6	4	6
n_1 r/min	1450	980	1750	1165

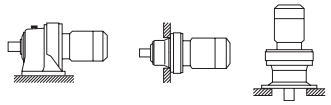

CHHM/CNHM CHFM/CNFM CVVM/CNVM

50Hz						60Hz						Nomenclature	Page of Dimension Sheet		
Output Speed n_2 [r/min]	Output Torque Tout [N·m]	[kgf·m]	Allowable Radial Load Pro [N]	[kgf]	SF	Output Speed n_2 [r/min]	Output Torque Tout [N·m]	[kgf·m]	Allowable Radial Load Pro [N]	[kgf]	SF	Input Capacity Symbol - Frame Size - Reduction Ratio	CNHM CHHM	CNFM CHFM	CNVM CVVM
3.85	520	53.0	9810	1000	*1	4.64	520	53.0	9810	1000	*1	05 - 6120DA - 377	B-108	B-124	B-143
	630	64.2	9810	1000	*1		630	64.2	9810	1000	*1	05 - 6125DA - 377	B-108	B-124	B-143
	894	91.1	**14700**	**1500**	**1.05**		741	75.5	**14700**	**1500**	**1.07**	**05 - 6135DA - 377**	**B-109**	**B-125**	**B-144**
			14700	1500	1.05				14700	1500	1.27	05 - 6135DB - 377	B-109	B-125	B-144
			16000	1630	1.07				16000	1630	1.07	05 - 6140DA - 377	B-109	B-125	B-144
			16000	1630	1.37				16000	1630	1.65	05 - 6140DB - 377	B-109	B-125	B-144
			16000	1630	1.53				16000	1630	1.85	05 - 6145DB - 377	B-109	B-125	B-144
			22100	2250	1.96				22100	2250	2.37	05 - 6160DA - 377	B-110	B-126	B-145
			22100	2250	2.35				22100	2250	2.84	05 - 6165DA - 377	B-110	B-126	B-145
			29500	3010	2.83				29500	3010	3.42	05 - 6170DA - 377	B-110	B-126	B-145
3.07	630	64.2	9810	1000	*1	3.70	630	64.2	9810	1000	*1	05 - 6125DA - 473	B-108	B-124	B-143
	780	79.5	14700	1500	*1		780	79.5	14700	1500	*1	05 - 6130DA - 473	B-109	B-125	B-144
	1120	114	14700	1500	0.84		929	94.7	14700	1500	1.01	05 - 6135DA - 473	B-109	B-125	B-144
			16000	**1630**	**1.07**				**16000**	**1630**	**1.07**	**05 - 6140DA - 473**	**B-109**	**B-125**	**B-144**
			16000	1630	1.09				16000	1630	1.32	05 - 6140DB - 473	B-109	B-125	B-144
			16000	1630	1.22				16000	1630	1.47	05 - 6145DB - 473	B-109	B-125	B-144
			22100	2250	1.55				22100	2250	1.87	05 - 6160DA - 473	B-110	B-126	B-145
			22100	2250	1.87				22100	2250	2.26	05 - 6165DA - 473	B-110	B-126	B-145
			29500	3010	2.26				29500	3010	2.72	05 - 6170DA - 473	B-110	B-126	B-145
			29500	3010	2.81				29500	3010	3.39	05 - 6175DA - 473	B-110	B-126	B-145
2.59	780	79.5	14700	1500	*1	3.13	780	79.5	14700	1500	*1	05 - 6130DA - 559	B-109	B-125	B-144
	940	95.8	14700	1500	*1		940	95.8	14700	1500	*1	05 - 6135DA - 559	B-109	B-125	B-144
	1330	135	**15900**	**1620**	**1.03**		1100	112	**16000**	**1630**	**1.07**	**05 - 6145DA - 559**	**B-109**	**B-125**	**B-144**
			15900	1620	1.03				16000	1630	1.25	05 - 6145DB - 559	B-109	B-125	B-144
			22100	2250	1.31				22100	2250	1.58	05 - 6160DA - 559	B-110	B-126	B-145
			22100	2250	1.58				22100	2250	1.91	05 - 6165DA - 559	B-110	B-126	B-145
			29500	3010	1.91				29500	3010	2.30	05 - 6170DA - 559	B-110	B-126	B-145
			29500	3010	2.38				29500	3010	2.87	05 - 6175DA - 559	B-110	B-126	B-145
2.23	912	93.0	14700	1500	*1	2.70	912	93.0	14700	1500	*1	05 - 6130DA - 649	B-109	B-125	B-144
	1050	107	14700	1500	*1		1050	107	14700	1500	*1	05 - 6135DA - 649	B-109	B-125	B-144
	1230	125	16000	1630	*1		1230	125	16000	1630	*1	05 - 6140DA - 649	B-109	B-125	B-144
	1540	157	16000	1630	0.89		1280	130	16000	1630	1.07	05 - 6145DA - 649	B-109	B-125	B-144
			22100	2250	1.14				22100	2250	1.38	05 - 6160DA - 649	B-110	B-126	B-145
			22100	2250	1.36				22100	2250	1.65	05 - 6165DA - 649	B-110	B-126	B-145
			29500	3010	1.64				29500	3010	1.98	05 - 6170DA - 649	B-110	B-126	B-145
			29500	3010	2.05				29500	3010	2.47	05 - 6175DA - 649	B-110	B-126	B-145
1.98	940	95.8	14700	1500	*1	2.39	940	95.8	14700	1500	*1	05 - 6135DA - 731	B-109	B-125	B-144
	1230	125	16000	1630	*1		1230	125	16000	1630	*1	05 - 6140DA - 731	B-109	B-125	B-144
	1370	140	15700	1600	*1		1370	140	15700	1600	*1	05 - 6145DA - 731	B-109	B-125	B-144
	1730	177	**22100**	**2250**	**1.00**		1440	146	**22100**	**2250**	**1.21**	**05 - 6160DA - 731**	**B-110**	**B-126**	**B-145**
			22100	2250	1.21				22100	2250	1.46	05 - 6165DA - 731	B-110	B-126	B-145
			29500	3010	1.46				29500	3010	1.76	05 - 6170DA - 731	B-110	B-126	B-145
			29500	3010	1.82				29500	3010	2.19	05 - 6175DA - 731	B-110	B-126	B-145
1.72	1230	125	16000	1630	*1	2.08	1230	125	16000	1630	*1	05 - 6140DA - 841	B-109	B-125	B-144
	1370	140	15800	1610	*1		1250	127	16000	1630	*1	05 - 6145DA - 841	B-109	B-125	B-144
	1990	203	**22100**	**2250**	**1.05**		1650	168	**22100**	**2250**	**1.27**	**05 - 6165DA - 841**	B-110	B-126	B-145
			29500	3010	1.27				29500	3010	1.53	05 - 6170DA - 841	B-110	B-126	B-145
			29500	3010	1.58				29500	3010	1.91	05 - 6175DA - 841	B-110	B-126	B-145
1.45	1370	140	16000	1630	*1	1.74	1370	140	16000	1630	*1	05 - 6145DA - 1003	B-109	B-125	B-144
	1760	179	22100	2250	*1		1760	179	22100	2250	*1	05 - 6160DA - 1003	B-110	B-126	B-145
	2380	242	22100	2250	0.88		1970	201	22100	2250	1.07	05 - 6165DA - 1003	B-110	B-126	B-145
			29500	**3010**	**1.06**				**29500**	**3010**	**1.28**	**05 - 6170DA - 1003**	B-110	B-126	B-145
			29500	3010	1.32				29500	3010	1.60	05 - 6175DA - 1003	B-110	B-126	B-145
1.16	1740	177	22100	2250	*1	1.40	1740	177	22100	2250	*1	05 - 6160DA - 1247	B-110	B-126	B-145
	2100	214	22100	2250	*1		2100	214	22100	2250	*1	05 - 6165DA - 1247	B-110	B-126	B-145
	2960	301	**29500**	**3010**	**1.07**		2450	250	**29500**	**3010**	**1.29**	**05 - 6175DA - 1247**	B-110	B-126	B-145

1. Combinations in **bold** are the recommended models for operations for 10 hours/day with uniform load (service factor is about 1.0 for motor rating at 50Hz).
2. Motor slippage may affect n_1 and n_2. Refer to technical data for details.
3. CNHM, CHHM, CNFM, CHFM, CNVM, and CVVM indicate types. Refer to page B-10 for details.
4. Lubrication method is different for each model. Refer to "Lubrication" section in page F-4~F-5 for details.
5. "6" at the end of "input capacity symbol" indicates models with 6P motor. Other models come with 4P motor.

Selection Tables Gearmotors

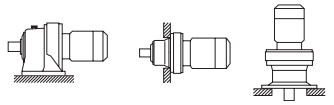

CHHM/CNHM CHFM/CNFM CVVM/CNVM

n_1: Motor Speed

0.4 kW	Hz	50Hz		60Hz	
	P	4	6	4	6
	n_1 r/min	1450	980	1750	1165

50Hz						60Hz						Nomenclature	Page of Dimension Sheet		
Output Speed n_2 [r/min]	Output Torque Tout [N·m]	[kgf·m]	Allowable Radial Load Pro [N]	[kgf]	SF	Output Speed n_2 [r/min]	Output Torque Tout [N·m]	[kgf·m]	Allowable Radial Load Pro [N]	[kgf]	SF	Input Capacity Symbol - Frame Size - Reduction Ratio	CNHM CHHM	CNFM CHFM	CNVM CVVM
0.980	1760	179	22100	2250	*1	1.18	1760	179	22100	2250	*1	05 - 6160DA - 1479	B-110	B-126	B-145
	2050	209	21800	2220	*1		2050	209	21800	2220	*1	05 - 6165DA - 1479	B-110	B-126	B-145
	2530	258	29500	3010	*1		2530	258	29500	3010	*1	05 - 6170DA - 1479	B-110	B-126	B-145
	3510	357	29500	3010	0.90		2910	296	29500	3010	1.08	05 - 6175DA - 1479	B-110	B-126	B-145
0.784	2100	214	22100	2250	*1	0.946	2100	214	22100	2250	*1	05 - 6165DA - 1849	B-110	B-126	B-145
	2530	258	29500	3010	*1		2530	258	29500	3010	*1	05 - 6170DA - 1849	B-110	B-126	B-145
	3150	321	29500	3010	*1		3150	321	29500	3010	*1	05 - 6175DA - 1849	B-110	B-126	B-145
	4380	447	41700	4250	0.93		3630	370	41700	4250	1.12	05 - 6180DA - 1849	B-110	B-126	B-145
0.702	2530	258	29500	3010	*1	0.847	2530	258	29500	3010	*1	05 - 6170DA - 2065	B-110	B-126	B-145
	3150	321	29500	3010	*1		3150	321	29500	3010	*1	05 - 6175DA - 2065	B-110	B-126	B-145
	4050	413	41700	4250	*1		4050	413	41700	4250	*1	05 - 6180DA - 2065	B-110	B-126	B-145
0.572	3150	321	29500	3010	*1	0.690	3150	321	29500	3010	*1	05 - 6175DA - 2537	B-110	B-126	B-145
	4050	413	41700	4250	*1		4050	413	41700	4250	*1	05 - 6180DA - 2537	B-110	B-126	B-145
	5000	510	41600	4240	*1		5000	510	41600	4240	*1	05 - 6185DA - 2537	B-110	B-126	B-145
	6020	613	41200	4200	0.83		4980	508	41600	4240	1.00	05 - 6185DA - 2537	B-110	B-126	B-145
0.476	4060	414	41700	4250	*1	0.575	4060	414	41700	4250	*1	05 - 6180DA - 3045	B-110	B-126	B-145
	5000	510	41700	4250	*1		5000	510	41700	4250	*1	05 - 6185DA - 3045	B-110	B-126	B-145
0.417	4050	413	41700	4250	*1	0.503	4050	413	41700	4250	*1	05 - 6180DA - 3481	B-110	B-126	B-145
	5000	510	41600	4240	*1		5000	510	41600	4240	*1	05 - 6185DA - 3481	B-110	B-126	B-145
0.327	4060	414	41700	4250	*1	0.394	4060	414	41700	4250	*1	05 - 6180DA - 4437	B-110	B-126	B-145
	5000	510	41700	4250	*1		5000	510	41700	4250	*1	05 - 6185DA - 4437	B-110	B-126	B-145
0.282	4060	414	41700	4250	*1	0.341	4060	414	41700	4250	*1	05 - 6180DA - 5133	B-110	B-126	B-145
	5000	510	41700	4250	*1		5000	510	41700	4250	*1	05 - 6185DA - 5133	B-110	B-126	B-145
0.235	4060	414	41700	4250	*1	0.283	4060	414	41700	4250	*1	05 - 6180DA - 6177	B-110	B-126	B-145
	5000	510	41700	4250	*1		5000	510	41700	4250	*1	05 - 6185DA - 6177	B-110	B-126	B-145
0.192	4060	414	41700	4250	*1	0.231	4060	414	41700	4250	*1	05 - 6180DA - 7569	B-110	B-126	B-145
	5000	510	41700	4250	*1		5000	510	41700	4250	*1	05 - 6185DA - 7569	B-110	B-126	B-145

6. "*2" indicate models manufactured with reducer and motor separately mounted on a common baseplate (horizontal shaft direction) or on an adaptor (vertical shaft direction). Consult us for details, including dimensions.
7. Allowable radial load (Pro) is the value at the midpoint of the slow speed shaft.
8. "*3" indicate models with reduction ratios equal to nominal ratio. Refer to Table A-3 "6000SK Series (Actual Reduction Ratio)" on page A-4 for actual reduction ratio. Indicated reduction ratio is the same as actual reduction ratio for other models.
9. Maintain torque load during operation within "Output torque" in the table for models with "*1" in the SF column. They cannot be operated with 100% motor rating.

Selection Tables Gearmotors

n_1: Motor Speed

0.55 kW	Hz		50Hz		60Hz	
	P		4	6	4	6
	n_1	r/min	1450	980	1750	1165

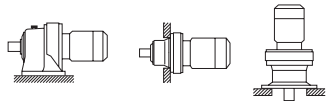

CHHM/CNHM CHFM/CNFM CVVM/CNVM

50Hz						60Hz						Nomenclature				Page of Dimension Sheet		
Output Speed n_2 [r/min]	Output Torque Tout [N·m]	[kgf·m]	Allowable Radial Load Pro [N]	[kgf]	SF	Output Speed n_2 [r/min]	Output Torque Tout [N·m]	[kgf·m]	Allowable Radial Load Pro [N]	[kgf]	SF	Input Capacity Symbol	- Frame Size	- Reduction Ratio		CNHM CHHM	CNFM CHFM	CNVM CVVM
			1170	119	2.02				1100	112	2.02	08 -	6070SK	- 2.5	*3	B-98	-	B-133
			1170	119	2.53				1100	112	2.53	08 -	6075SK	- 2.5	*3	B-98	-	B-133
580	8.60	0.877	1290	131	3.00	700	7.13	0.727	1220	124	3.00	08 -	6080SK	- 2.5	*3	B-98	-	B-133
			1290	131	3.75				1220	124	3.75	08 -	6085SK	- 2.5	*3	B-98	-	B-133
			2280	232	4.36				2150	219	4.36	08 -	6090SK	- 2.5	*3	B-98	-	B-133
			1220	124	1.93				1150	117	1.93	08 -	6070SK	- 3	*3	B-98	-	B-133
			1220	124	2.41				1150	117	2.41	08 -	6075SK	- 3	*3	B-98	-	B-133
483	10.3	1.05	1350	138	3.00	583	8.55	0.872	1290	131	3.00	08 -	6080SK	- 3	*3	B-98	-	B-133
			1350	138	3.75				1290	131	3.75	08 -	6085SK	- 3	*3	B-98	-	B-133
			2380	243	4.25				2250	229	4.25	08 -	6090SK	- 3	*3	B-98	-	B-133
			1320	135	1.70				1260	128	1.70	08 -	6070SK	- 4	*3	B-98	-	B-133
			1320	135	2.12				1260	128	2.12	08 -	6075SK	- 4	*3	B-98	-	B-133
363	13.8	1.40	1470	150	3.00	438	11.4	1.16	1390	142	3.00	08 -	6080SK	- 4	*3	B-98	-	B-133
			1470	150	3.75				1390	142	3.75	08 -	6085SK	- 4	*3	B-98	-	B-133
			2670	272	4.25				2560	261	4.25	08 -	6090SK	- 4	*3	B-98	-	B-133
			1370	140	1.61				1290	132	1.61	08 -	6070SK	- 5	*3	B-98	-	B-133
			1370	140	2.02				1290	132	2.02	08 -	6075SK	- 5	*3	B-98	-	B-133
290	17.2	1.75	1590	162	2.82	350	14.3	1.45	1510	154	2.82	08 -	6080SK	- 5	*3	B-98	-	B-133
			1590	162	3.31				1510	154	3.31	08 -	6085SK	- 5	*3	B-98	-	B-133
			2880	294	4.06				2730	278	4.06	08 -	6090SK	- 5	*3	B-98	-	B-133
			1370	140	1.42				1290	132	1.42	08 -	6070SK	- 6	*3	B-98	-	B-133
			1370	140	1.78				1290	132	1.78	08 -	6075SK	- 6	*3	B-98	-	B-133
			1660	169	2.36				1580	161	2.36	08 -	6080SK	- 6	*3	B-98	-	B-133
			1660	169	2.95				1580	161	2.95	08 -	6085SK	- 6	*3	B-98	-	B-133
242	20.6	2.10	2950	301	3.47	292	17.1	1.74	2810	286	3.47	08 -	6090SK	- 6	*3	B-98	-	B-133
			2950	301	4.13				2810	286	4.13	08 -	6095SK	- 6	*3	B-98	-	B-133
			1910	**195**	**1.08**				**1800**	**183**	**1.08**	**08 -**	**6080**	**- 6**		**B-100**	**B-116**	**B-135**
			1910	195	1.41				1800	183	1.41	08 -	6085	- 6		B-100	B-116	B-135
			2850	291	2.09				2690	274	2.09	08 -	6090	- 6		B-100	B-116	B-135
			2850	291	2.76				2690	274	2.76	08 -	6095	- 6		B-100	B-116	B-135
			1510	154	1.07				1420	145	1.07	08 -	6070SK	- 8	*3	B-98	-	B-133
			1510	154	1.34				1420	145	1.34	08 -	6075SK	- 8	*3	B-98	-	B-133
			1750	178	1.99				1670	170	1.99	08 -	6080SK	- 8	*3	B-98	-	B-133
			1750	178	2.49				1670	170	2.49	08 -	6085SK	- 8	*3	B-98	-	B-133
			3300	336	2.74				3140	320	2.74	08 -	6090SK	- 8	*3	B-98	-	B-133
181	27.5	2.81	3300	336	3.22	219	22.8	2.33	3140	320	3.22	08 -	6095SK	- 8	*3	B-98	-	B-133
			3300	336	3.85				3140	320	3.85	08 -	6100SK	- 8	*3	B-99	-	B-134
			2070	**211**	**1.08**				**1950**	**198**	**1.08**	**08 -**	**6080**	**- 8**		**B-100**	**B-116**	**B-135**
			2070	211	1.41				1950	198	1.41	08 -	6085	- 8		B-100	B-116	B-135
			3180	324	2.09				2990	305	2.09	08 -	6090	- 8		B-100	B-116	B-135
			3180	324	2.76				2990	305	2.76	08 -	6095	- 8		B-100	B-116	B-135
			1680	**171**	**1.03**				**1590**	**162**	**1.03**	**08 -**	**6075SK**	**- 10**	*3	**B-98**	**-**	**B-133**
			1840	188	1.60				1770	180	1.60	08 -	6080SK	- 10	*3	B-98	-	B-133
			1840	188	2.00				1770	180	2.00	08 -	6085SK	- 10	*3	B-98	-	B-133
145	34.4	3.51	3490	356	2.55	175	28.5	2.91	3330	339	2.55	08 -	6090SK	- 10	*3	B-98	-	B-133
			3490	356	3.22				3330	339	3.22	08 -	6095SK	- 10	*3	B-98	-	B-133
			3490	356	3.60				3330	339	3.60	08 -	6100SK	- 10	*3	B-99	-	B-134
			3490	356	4.00				3330	339	4.00	08 -	6105SK	- 10	*3	B-99	-	B-134
			2280	**232**	**1.08**				**2150**	**219**	**1.08**	**08 -**	**6080**	**- 11**		**B-100**	**B-116**	**B-135**
			2280	232	1.41				2150	219	1.41	08 -	6085	- 11		B-100	B-116	B-135
132	37.9	3.86	3340	340	2.09	159	31.4	3.20	3340	340	2.09	08 -	6090	- 11		B-100	B-116	B-135
			3340	340	2.76				3340	340	2.76	08 -	6095	- 11		B-100	B-116	B-135
			2450	**249**	**1.08**				**2310**	**235**	**1.08**	**08 -**	**6080**	**- 13**		**B-100**	**B-116**	**B-135**
			2450	249	1.41				2310	235	1.41	08 -	6085	- 13		B-100	B-116	B-135
112	44.7	4.56	3340	340	2.09	135	37.1	3.78	3340	340	2.09	08 -	6090	- 13		B-100	B-116	B-135
			3340	340	2.76				3340	340	2.76	08 -	6095	- 13		B-100	B-116	B-135

1. Combinations in **bold** are the recommended models for operations for 10 hours/day with uniform load (service factor is about 1.0 for motor rating at 50Hz).
2. Motor slippage may affect n_1 and n_2. Refer to technical data for details.
3. CNHM, CHHM, CNFM, CHFM, CNVM, and CVVM indicate types. Refer to page B-10 for details.
4. Lubrication method is different for each model. Refer to "Lubrication" section in page F-4~F-5 for details.
5. "6" at the end of "input capacity symbol" indicates models with 6P motor. Other models come with 4P motor.

Selection Tables Gearmotors

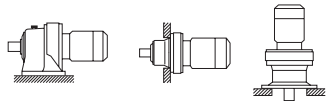

CHHM/CNHM CHFM/CNFM CVVM/CNVM

0.55 kW

n_1: Motor Speed

Hz	50Hz		60Hz	
P	4	6	4	6
n_1 r/min	1450	980	1750	1165

50Hz						60Hz						Nomenclature				Page of Dimension Sheet		
Output Speed n_2 [r/min]	Output Torque Tout [N·m]	Output Torque Tout [kgf·m]	Allowable Radial Load Pro [N]	Allowable Radial Load Pro [kgf]	SF	Output Speed n_2 [r/min]	Output Torque Tout [N·m]	Output Torque Tout [kgf·m]	Allowable Radial Load Pro [N]	Allowable Radial Load Pro [kgf]	SF	Input Capacity Symbol	- Frame Size	- Reduction Ratio		CNHM CHHM	CNFM CHFM	CNVM CVVM
96.7	51.6	5.26	**2520**	**257**	**1.08**	117	42.8	4.36	**2380**	**242**	**1.08**	**08 -**	**6080**	**- 15**		**B-100**	**B-116**	**B-135**
			2520	257	1.41				2380	242	1.41	08 -	6085	- 15		B-100	B-116	B-135
			3340	340	2.09				3340	340	2.09	08 -	6090	- 15		B-100	B-116	B-135
			3340	340	2.76				3340	340	2.76	08 -	6095	- 15		B-100	B-116	B-135
85.3	58.5	5.96	**2560**	**261**	**1.08**	103	48.5	4.94	**2490**	**254**	**1.08**	**08 -**	**6080**	**- 17**		**B-100**	**B-116**	**B-135**
			2560	261	1.41				2490	254	1.41	08 -	6085	- 17		B-100	B-116	B-135
			3340	340	2.09				3340	340	2.09	08 -	6090	- 17		B-100	B-116	B-135
			3340	340	2.76				3340	340	2.76	08 -	6095	- 17		B-100	B-116	B-135
69.0	72.3	7.37	**2560**	**261**	**1.00**	83.3	59.9	6.10	**2430**	**247**	**1.00**	**08 -**	**6085**	**- 21**		**B-100**	**B-116**	**B-135**
			3340	340	1.38				3340	340	1.38	08 -	6090	- 21		B-100	B-116	B-135
			3340	340	2.75				3340	340	2.76	08 -	6095	- 21		B-100	B-116	B-135
58.0	86.0	8.77	2510	256	0.86	70.0	71.3	7.27	2490	254	0.86	08 -	6085	- 25		B-100	B-116	B-135
			3340	**340**	**1.22**				**3340**	**340**	**1.22**	**08 -**	**6090**	**- 25**		**B-100**	**B-116**	**B-135**
			3340	340	1.57				3340	340	1.57	08 -	6095	- 25		B-100	B-116	B-135
			5400	550	2.31				5400	550	2.31	08 -	6100	- 25		B-101	B-117	B-136
50.0	99.8	10.2	2300	235	0.85	60.3	82.7	8.43	2480	253	0.85	08 -	6085	- 29		B-100	B-116	B-135
			3340	**340**	**1.14**				**3340**	**340**	**1.14**	**08 -**	**6090**	**- 29**		**B-100**	**B-116**	**B-135**
			3340	340	1.43				3340	340	1.43	08 -	6095	- 29		B-100	B-116	B-135
			5400	550	2.20				5400	550	2.20	08 -	6100	- 29		B-101	B-117	B-136
			5400	550	2.89				5400	550	2.89	08 -	6105	- 29		B-101	B-117	B-136
41.4	120	12.3	**3340**	**340**	**1.11**	50.0	99.8	10.2	**3340**	**340**	**1.11**	**08 -**	**6090**	**- 35**		**B-100**	**B-116**	**B-135**
			3340	340	1.38				3340	340	1.38	08 -	6095	- 35		B-100	B-116	B-135
			5400	550	1.77				5400	550	1.77	08 -	6100	- 35		B-101	B-117	B-136
			5400	550	2.18				5400	550	2.18	08 -	6105	- 35		B-101	B-117	B-136
			7510	765	2.73				7530	767	2.73	08 -	6110	- 35		B-101	B-117	B-136
33.7	148	15.1	**3320**	**338**	**1.10**	40.7	123	12.5	**3340**	**340**	**1.10**	**08 -**	**6095**	**- 43**		**B-100**	**B-116**	**B-135**
			5400	550	1.42				5400	550	1.42	08 -	6100	- 43		B-101	B-117	B-136
			5400	550	1.96				5400	550	1.96	08 -	6105	- 43		B-101	B-117	B-136
			7610	776	2.36				7610	776	2.36	08 -	6110	- 43		B-101	B-117	B-136
			7610	776	2.76				7610	776	2.76	08 -	6115	- 43		B-101	B-117	B-136
28.4	176	17.9	**5400**	**550**	**1.02**	34.3	145	14.8	**5400**	**550**	**1.02**	**08 -**	**6100**	**- 51**		**B-101**	**B-117**	**B-136**
			5400	550	1.41				5400	550	1.41	08 -	6105	- 51		B-101	B-117	B-136
			7610	776	1.72				7610	776	1.72	08 -	6110	- 51		B-101	B-117	B-136
			7610	776	2.02				7610	776	2.02	08 -	6115	- 51		B-101	B-117	B-136
			9810	1000	2.96				9810	1000	3.13	08 -	6120	- 51		B-101	B-117	B-136
24.6	203	20.7	**5400**	**550**	**1.24**	29.7	168	17.1	**5400**	**550**	**1.29**	**08 -**	**6105**	**- 59**		**B-101**	**B-117**	**B-136**
			7610	776	1.56				7610	776	1.56	08 -	6110	- 59		B-101	B-117	B-136
			7610	776	1.84				7610	776	1.84	08 -	6115	- 59		B-101	B-117	B-136
			9810	1000	2.36				9810	1000	2.36	08 -	6120	- 59		B-101	B-117	B-136
			9810	1000	2.95				9810	1000	2.95	08 -	6125	- 59		B-101	B-117	B-136
20.4	244	24.9	5380	549	0.92	24.6	202	20.6	5400	550	1.02	08 -	6105	- 71		B-101	B-117	B-136
			7610	**776**	**1.22**				**7610**	**776**	**1.22**	**08 -**	**6110**	**- 71**		**B-101**	**B-117**	**B-136**
			7610	776	1.38				7610	776	1.38	08 -	6115	- 71		B-101	B-117	B-136
			9810	1000	1.74				9810	1000	1.74	08 -	6120	- 71		B-101	B-117	B-136
			9810	1000	2.07				9810	1000	2.18	08 -	6125	- 71		B-101	B-117	B-136
16.7	299	30.5	4800	489	0.91	20.1	248	25.3	5400	550	1.03	08 -	6105	- 87		B-101	B-117	B-136
			7610	**776**	**1.20**				**7610**	**776**	**1.20**	**08 -**	**6110**	**- 87**		**B-101**	**B-117**	**B-136**
			7610	776	1.38				7610	776	1.38	08 -	6115	- 87		B-101	B-117	B-136
			9810	1000	1.72				9810	1000	1.72	08 -	6120	- 87		B-101	B-117	B-136
			9810	1000	1.87				9810	1000	2.05	08 -	6125	- 87		B-101	B-117	B-136
			14700	1500	2.58				14200	1450	2.58	08 -	6130	- 87		B-102	B-118	B-137
			14700	1500	3.00				14200	1450	3.47	08 -	6135	- 87		B-102	B-118	B-137

6. "*2" indicate models manufactured with reducer and motor separately mounted on a common baseplate (horizontal shaft direction) or on an adaptor (vertical shaft direction). Consult us for details, including dimensions.
7. Allowable radial load (Pro) is the value at the midpoint of the slow speed shaft.
8. "*3" indicate models with reduction ratios equal to nominal ratio. Refer to Table A-3 "6000SK Series (Actual Reduction Ratio)" on page A-4 for actual reduction ratio. Indicated reduction ratio is the same as actual reduction ratio for other models.
9. Maintain torque load during operation within "Output torque" in the table for models with "*1" in the SF column. They cannot be operated with 100% motor rating.

Selection Tables Gearmotors

n_1: Motor Speed

0.55 kW	Hz		50Hz		60Hz	
	P		4	6	4	6
	n_1	r/min	1450	980	1750	1165

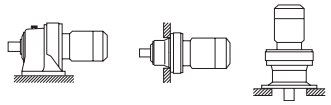

CHHM/CNHM CHFM/CNFM CVVM/CNVM

50Hz						60Hz						Nomenclature	Page of Dimension Sheet		
Output Speed n_2 [r/min]	Output Torque Tout [N·m]	[kgf·m]	Allowable Radial Load Pro [N]	[kgf]	SF	Output Speed n_2 [r/min]	Output Torque Tout [N·m]	[kgf·m]	Allowable Radial Load Pro [N]	[kgf]	SF	Input Capacity Symbol - Frame Size - Reduction Ratio	CNHM CHHM	CNFM CHFM	CNVM CVVM
13.9	339	34.6	9810	1000	1.55	16.8	281	28.6	9810	1000	1.87	08 - 6120DB - 104	B-108	B-124	B-143
			9810	1000	1.86				9810	1000	2.24	08 - 6125DB - 104	B-108	B-124	B-143
			14700	1500	2.30				14700	1500	2.78	08 - 6130DB - 104	B-109	B-125	B-144
			14700	1500	2.77				14700	1500	2.91	08 - 6135DB - 104	B-109	B-125	B-144
			14700	1500	2.77				14700	1500	3.35	08 - 6135DC - 104	B-109	B-125	B-144
			16000	1630	2.91				16000	1630	2.91	08 - 6140DB - 104	B-109	B-125	B-144
12.0	394	40.2	9810	1000	1.33	14.5	327	33.3	9810	1000	1.61	08 - 6120DB - 121	B-108	B-124	B-143
			9810	1000	1.58				9810	1000	1.90	08 - 6125DB - 121	B-108	B-124	B-143
			14700	1500	1.98				14700	1500	2.39	08 - 6130DB - 121	B-109	B-125	B-144
			14700	1500	2.38				14700	1500	2.88	08 - 6135DB - 121	B-109	B-125	B-144
			16000	1630	2.91				16000	1630	2.91	08 - 6140DB - 121	B-109	B-125	B-144
10.1	466	47.5	9810	1000	1.13	12.2	386	39.4	9810	1000	1.36	08 - 6120DB - 143	B-108	B-124	B-143
			9810	1000	1.35				9810	1000	1.63	08 - 6125DB - 143	B-108	B-124	B-143
			14700	1500	1.67				14700	1500	2.02	08 - 6130DB - 143	B-109	B-125	B-144
			14700	1500	2.02				14700	1500	2.43	08 - 6135DB - 143	B-109	B-125	B-144
			16000	1630	2.63				16000	1630	2.91	08 - 6140DB - 143	B-109	B-125	B-144
			16000	1630	2.63				16000	1630	3.17	08 - 6140DC - 143	B-109	B-125	B-144
			16000	1630	2.91				16000	1630	2.91	08 - 6145DB - 143	B-109	B-125	B-144
			16000	1630	2.94				16000	1630	3.55	08 - 6145DC - 143	B-109	B-125	B-144
8.79	538	54.8	9810	1000	1.17	10.6	446	45.4	9810	1000	1.41	08 - 6125DB - 165	B-108	B-124	B-143
			14700	1500	1.45				14700	1500	1.75	08 - 6130DB - 165	B-109	B-125	B-144
			14700	1500	1.75				14700	1500	2.11	08 - 6135DB - 165	B-109	B-125	B-144
			16000	1630	2.28				16000	1630	2.75	08 - 6140DB - 165	B-109	B-125	B-144
			16000	1630	2.52				16000	1630	2.91	08 - 6145DB - 165	B-109	B-125	B-144
			16000	1630	2.52				16000	1630	3.05	08 - 6145DC - 165	B-109	B-125	B-144
			22100	2250	2.91				22100	2250	2.91	08 - 6160DA - 165	B-110	B-126	B-145
7.44	525	53.5	9810	1000	*1	8.97	525	53.5	9810	1000	*1	08 - 6120DB - 195	B-108	B-124	B-143
	636	64.8	9810	1000	0.98		527	53.7	9810	1000	1.20	08 - 6125DB - 195	B-108	B-124	B-143
			14700	1500	1.23				14700	1500	1.48	08 - 6130DB - 195	B-109	B-125	B-144
			14700	1500	1.48				14700	1500	1.78	08 - 6135DB - 195	B-109	B-125	B-144
			16000	1630	1.93				16000	1630	2.33	08 - 6140DB - 195	B-109	B-125	B-144
			16000	1630	2.14				16000	1630	2.58	08 - 6145DB - 195	B-109	B-125	B-144
			22100	2250	2.76				22100	2250	2.91	08 - 6160DA - 195	B-110	B-126	B-145
			22100	2250	2.76				22100	2250	3.33	08 - 6160DB - 195	B-110	B-126	B-145
			22100	2250	2.91				22100	2250	2.91	08 - 6165DA - 195	B-110	B-126	B-145
6.28	522	53.2	9810	1000	*1	7.58	522	53.2	9810	1000	*1	08 - 6120DB - 231	B-108	B-124	B-143
	753	76.8	9810	1000	0.84		624	63.6	9810	1000	1.01	08 - 6125DB - 231	B-108	B-124	B-143
			14700	**1500**	**1.04**				**14700**	**1500**	**1.25**	**08 - 6130DB - 231**	**B-109**	**B-125**	**B-144**
			14700	1500	1.25				14700	1500	1.51	08 - 6135DB - 231	B-109	B-125	B-144
			16000	1630	1.63				16000	1630	1.96	08 - 6140DB - 231	B-109	B-125	B-144
			16000	1630	1.78				16000	1630	2.14	08 - 6145DB - 231	B-109	B-125	B-144
			22100	2250	2.33				22100	2250	2.81	08 - 6160DA - 231	B-110	B-126	B-145
			22100	2250	2.79				22100	2250	2.91	08 - 6165DA - 231	B-110	B-126	B-145
			22100	2250	2.79				22100	2250	3.37	08 - 6165DB - 231	B-110	B-126	B-145
			29500	3010	2.91				29500	3010	2.91	08 - 6170DA - 231	B-110	B-126	B-145

1. Combinations in **bold** are the recommended models for operations for 10 hours/day with uniform load (service factor is about 1.0 for motor rating at 50Hz).
2. Motor slippage may affect n_1 and n_2. Refer to technical data for details.
3. CNHM, CHHM, CNFM, CHFM, CNVM, and CVVM indicate types. Refer to page B-10 for details.
4. Lubrication method is different for each model. Refer to "Lubrication" section in page F-4~F-5 for details.
5. "6" at the end of "input capacity symbol" indicates models with 6P motor. Other models come with 4P motor.

Selection Tables Gearmotors

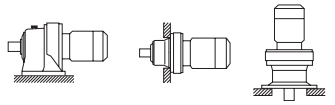

CHHM/CNHM CHFM/CNFM CVVM/CNVM

0.55 kW

n_1: Motor Speed

Hz	50Hz		60Hz	
P	4	6	4	6
n_1 r/min	1450	980	1750	1165

50Hz						60Hz						Nomenclature	Page of Dimension Sheet		
Output Speed n_2 [r/min]	Output Torque Tout [N·m]	[kgf·m]	Allowable Radial Load Pro [N]	[kgf]	SF	Output Speed n_2 [r/min]	Output Torque Tout [N·m]	[kgf·m]	Allowable Radial Load Pro [N]	[kgf]	SF	Input Capacity Symbol - Frame Size - Reduction Ratio	CNHM CHHM	CNFM CHFM	CNVM CVVM
			14700	**1500**	**1.06**				**14700**	**1500**	**1.27**	**08 - 6135DB - 273**	**B-109**	**B-125**	**B-144**
			16000	1630	1.38				16000	1630	1.66	08 - 6140DB - 273	B-109	B-125	B-144
			16000	1630	1.50				16000	1630	1.81	08 - 6145DB - 273	B-109	B-125	B-144
5.31	890	90.7	22100	2250	1.97	6.41	737	75.2	22100	2250	2.38	08 - 6160DA - 273	B-110	B-126	B-145
			22100	2250	2.36				22100	2250	2.85	08 - 6165DA - 273	B-110	B-126	B-145
			29500	3010	2.84				29500	3010	2.91	08 - 6170DA - 273	B-110	B-126	B-145
			29500	3010	2.84				29500	3010	3.43	08 - 6170DB - 273	B-110	B-126	B-145
			29500	3010	2.91				29500	3010	2.91	08 - 6175DA - 273	B-110	B-126	B-145
	630	64.2	9810	1000	*1		630	64.2	9810	1000	*1	08 - 6125DB - 319	B-108	B-124	B-143
	780	79.5	14700	1500	*1		780	79.5	14700	1500	*1	08 - 6130DB - 319	B-109	B-125	B-144
			14700	1500	0.90				14700	1500	1.09	08 - 6135DB - 319	B-109	B-125	B-144
			16000	1630	1.18				16000	1630	1.42	08 - 6140DB - 319	B-109	B-125	B-144
			16000	1630	1.32				16000	1630	1.59	08 - 6145DB - 319	B-109	B-125	B-144
4.55	1040	106	22100	2250	1.69	5.49	862	87.8	22100	2250	2.04	08 - 6160DA - 319	B-110	B-126	B-145
			22100	2250	2.02				22100	2250	2.44	08 - 6165DA - 319	B-110	B-126	B-145
			29500	3010	2.43				29500	3010	2.91	08 - 6170DA - 319	B-110	B-126	B-145
			29500	3010	2.43				29500	3010	2.94	08 - 6170DB - 319	B-110	B-126	B-145
			29500	3010	2.91				29500	3010	2.91	08 - 6175DA - 319	B-110	B-126	B-145
	780	79.5	14700	1500	*1		780	79.5	14700	1500	*1	08 - 6130DB - 377	B-109	B-125	B-144
	940	95.8	14700	1500	*1		940	95.8	14700	1500	*1	08 - 6135DB - 377	B-109	B-125	B-144
			16000	**1630**	**1.00**				**16000**	**1630**	**1.20**	**08 - 6140DB - 377**	**B-109**	**B-125**	**B-144**
			16000	1630	1.11				16000	1630	1.35	08 - 6145DB - 377	B-109	B-125	B-144
3.85			22100	2250	1.43	4.64			22100	2250	1.72	08 - 6160DA - 377	B-110	B-126	B-145
	1230	125	22100	2250	1.71		1020	104	22100	2250	2.06	08 - 6165DA - 377	B-110	B-126	B-145
			29500	3010	2.06				29500	3010	2.48	08 - 6170DA - 377	B-110	B-126	B-145
			29500	3010	2.56				29500	3010	2.91	08 - 6175DA - 377	B-110	B-126	B-145
			29500	3010	2.56				29500	3010	3.09	08 - 6175DB - 377	B-110	B-126	B-145
	940	95.8	14700	1500	*1		940	95.8	14700	1500	*1	08 - 6135DB - 473	B-109	B-125	B-144
	1230	125	16000	1630	*1		1230	125	16000	1630	*1	08 - 6140DB - 473	B-109	B-125	B-144
			14800	1510	0.89				16000	1630	1.07	08 - 6145DB - 473	B-109	B-125	B-144
3.07			22100	2250	1.13	3.70			22100	2250	1.36	08 - 6160DA - 473	B-110	B-126	B-145
	1540	157	22100	2250	1.36		1280	130	22100	2250	1.64	08 - 6165DA - 473	B-110	B-126	B-145
			29500	3010	1.64				29500	3010	1.98	08 - 6170DA - 473	B-110	B-126	B-145
			29500	3010	2.04				29500	3010	2.47	08 - 6175DA - 473	B-110	B-126	B-145
	1230	125	16000	1630	*1		1230	125	16000	1630	*1	08 - 6140DB - 559	B-109	B-125	B-144
	1370	140	15700	1600	*1		1370	140	15700	1600	*1	08 - 6145DB - 559	B-109	B-125	B-144
2.59			22100	2250	1.15	3.13			22100	2250	1.39	08 - 6165DA - 559	B-110	B-126	B-145
	1820	186	29500	3010	1.39		1510	154	29500	3010	1.68	08 - 6170DA - 559	B-110	B-126	B-145
			29500	3010	1.73				29500	3010	2.09	08 - 6175DA - 559	B-110	B-126	B-145
	1370	140	16000	1630	*1		1370	140	16000	1630	*1	08 - 6145DB - 649	B-109	B-125	B-144
	1760	179	22100	2250	*1		1760	179	22100	2250	*1	08 - 6160DA - 649	B-110	B-126	B-145
2.23			22100	2250	0.98	2.70			22100	2250	1.20	08 - 6165DA - 649	B-110	B-126	B-145
	2120	216	29500	3010	1.20		1750	179	29500	3010	1.44	08 - 6170DA - 649	B-110	B-126	B-145
			29500	3010	1.49				29500	3010	1.80	08 - 6175DA - 649	B-110	B-126	B-145
	1740	177	22100	2250	*1		1740	177	22100	2250	*1	08 - 6160DA - 731	B-110	B-126	B-145
1.98			22100	2250	0.88	2.39			22100	2250	1.06	08 - 6165DA - 731	B-110	B-126	B-145
	2380	243	**29500**	**3010**	**1.06**		1970	201	**29500**	**3010**	**1.28**	**08 - 6170DA - 731**	**B-110**	**B-126**	**B-145**
			29500	3010	1.32				29500	3010	1.60	08 - 6175DA - 731	B-110	B-126	B-145

6. "*2" indicate models manufactured with reducer and motor separately mounted on a common baseplate (horizontal shaft direction) or on an adaptor (vertical shaft direction). Consult us for details, including dimensions.
7. Allowable radial load (Pro) is the value at the midpoint of the slow speed shaft.
8. "*3" indicate models with reduction ratios equal to nominal ratio. Refer to Table A-3 "6000SK Series (Actual Reduction Ratio)" on page A-4 for actual reduction ratio. Indicated reduction ratio is the same as actual reduction ratio for other models.
9. Maintain torque load during operation within "Output torque" in the table for models with "*1" in the SF column. They cannot be operated with 100% motor rating.

Selection Tables Gearmotors

0.55 kW

n_1: Motor Speed

Hz	50Hz		60Hz	
P	4	6	4	6
n_1 r/min	1450	980	1750	1165

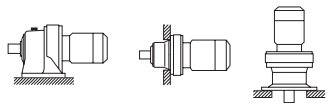

50Hz						60Hz						Nomenclature	Page of Dimension Sheet		
Output Speed n_2 [r/min]	Output Torque Tout [N·m]	[kgf·m]	Allowable Radial Load Pro [N]	[kgf]	SF	Output Speed n_2 [r/min]	Output Torque Tout [N·m]	[kgf·m]	Allowable Radial Load Pro [N]	[kgf]	SF	Input Capacity Symbol - Frame Size - Reduction Ratio	CNHM CHHM	CNFM CHFM	CNVM CVVM
1.72	1760	179	22100	2250	*1	2.08	1760	179	22100	2250	*1	08 - 6160DA - 841	B-110	B-126	B-145
	2100	214	22100	2250	*1		2100	214	22100	2250	*1	08 - 6165DA - 841	B-110	B-126	B-145
	2740	279	29500	3010	1.15		2270	232	29500	3010	1.39	08 - 6175DA - 841	B-110	B-126	B-145
1.45	2100	214	22100	2250	*1	1.74	2100	214	22100	2250	*1	08 - 6165DA - 1003	B-110	B-126	B-145
	2530	258	29500	3010	*1		2530	258	29500	3010	*1	08 - 6170DA - 1003	B-110	B-126	B-145
	3270	333	29500	3010	0.96		2710	276	29500	3010	1.16	08 - 6175DA - 1003	B-110	B-126	B-145
1.16	2530	258	29500	3010	*1	1.40	2530	258	29500	3010	*1	08 - 6170DA - 1247	B-110	B-126	B-145
	3150	321	29500	3010	*1		3150	321	29500	3010	*1	08 - 6175DA - 1247	B-110	B-126	B-145
0.980	3150	321	29500	3010	*1	1.18	3150	321	29500	3010	*1	08 - 6175DA - 1479	B-110	B-126	B-145
0.784	4060	414	41700	4250	*1	0.946	4060	414	41700	4250	*1	08 - 6180DA - 1849	B-110	B-126	B-145

0.75 kW

n_1: Motor Speed

Hz	50Hz		60Hz	
P	4	6	4	6
n_1 r/min	1450	980	1750	1165

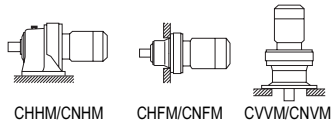

50Hz						60Hz						Nomenclature	Page of Dimension Sheet		
Output Speed n_2 [r/min]	Output Torque Tout [N·m]	[kgf·m]	Allowable Radial Load Pro [N]	[kgf]	SF	Output Speed n_2 [r/min]	Output Torque Tout [N·m]	[kgf·m]	Allowable Radial Load Pro [N]	[kgf]	SF	Input Capacity Symbol - Frame Size - Reduction Ratio	CNHM CHHM	CNFM CHFM	CNVM CVVM
580	11.7	1.20	1130	115	1.48	700	9.72	0.991	1080	110	1.48	1 - 6070SK - 2.5 *3	B-98	-	B-133
			1130	115	1.85				1080	110	1.85	1 - 6075SK - 2.5 *3	B-98	-	B-133
			1260	128	2.20				1190	121	2.20	1 - 6080SK - 2.5 *3	B-98	-	B-133
			1260	128	2.75				1190	121	2.75	1 - 6085SK - 2.5 *3	B-98	-	B-133
			2250	229	3.20				2130	217	3.20	1 - 6090SK - 2.5 *3	B-98	-	B-133
			2250	229	3.61				2130	217	3.61	1 - 6095SK - 2.5 *3	B-98	-	B-133
483	14.1	1.44	1180	120	1.41	583	11.7	1.19	1120	114	1.41	1 - 6070SK - 3 *3	B-98	-	B-133
			1180	120	1.77				1120	114	1.77	1 - 6075SK - 3 *3	B-98	-	B-133
			1310	134	2.20				1250	127	2.20	1 - 6080SK - 3 *3	B-98	-	B-133
			1310	134	2.75				1250	127	2.75	1 - 6085SK - 3 *3	B-98	-	B-133
			2340	239	3.12				2220	226	3.12	1 - 6090SK - 3 *3	B-98	-	B-133
			2340	239	3.51				2220	226	3.51	1 - 6095SK - 3 *3	B-98	-	B-133
363	18.8	1.91	**1270**	**129**	**1.25**	438	15.6	1.59	**1220**	**124**	**1.25**	**1 - 6070SK - 4 *3**	**B-98**	**-**	**B-133**
			1270	129	1.56				1220	124	1.56	1 - 6075SK - 4 *3	B-98	-	B-133
			1420	145	2.20				1350	138	2.20	1 - 6080SK - 4 *3	B-98	-	B-133
			1420	145	2.75				1350	138	2.75	1 - 6085SK - 4 *3	B-98	-	B-133
			2660	271	3.12				2520	257	3.12	1 - 6090SK - 4 *3	B-98	-	B-133
			2660	271	3.51				2520	257	3.51	1 - 6095SK - 4 *3	B-98	-	B-133
290	23.5	2.39	**1370**	**140**	**1.18**	350	19.4	1.98	**1290**	**132**	**1.18**	**1 - 6070SK - 5 *3**	**B-98**	**-**	**B-133**
			1370	140	1.48				1290	132	1.48	1 - 6075SK - 5 *3	B-98	-	B-133
			1530	156	2.07				1460	149	2.07	1 - 6080SK - 5 *3	B-98	-	B-133
			1530	156	2.47				1460	149	2.43	1 - 6085SK - 5 *3	B-98	-	B-133
			2820	287	2.98				2680	273	2.98	1 - 6090SK - 5 *3	B-98	-	B-133
			2820	287	3.51				2680	273	3.51	1 - 6095SK - 5 *3	B-98	-	B-133

1. Combinations in **bold** are the recommended models for operations for 10 hours/day with uniform load (service factor is about 1.0 for motor rating at 50Hz).
2. Motor slippage may affect n_1 and n_2. Refer to technical data for details.
3. CNHM, CHHM, CNFM, CHFM, CNVM, and CVVM indicate types. Refer to page B-10 for details.
4. Lubrication method is different for each model. Refer to "Lubrication" section in page F-4~F-5 for details.
5. "6" at the end of "input capacity symbol" indicates models with 6P motor. Other models come with 4P motor.

Selection Tables Gearmotors

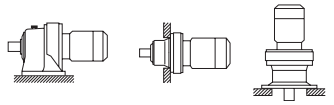

CHHM/CNHM CHFM/CNFM CVVM/CNVM

0.75 kW

n_1: Motor Speed

Hz	50Hz		60Hz	
P	4	6	4	6
n_1 r/min	1450	980	1750	1165

50Hz						60Hz						Nomenclature				Page of Dimension Sheet		
Output Speed n_2 [r/min]	Output Torque Tout [N·m]	[kgf·m]	Allowable Radial Load Pro [N]	[kgf]	SF	Output Speed n_2 [r/min]	Output Torque Tout [N·m]	[kgf·m]	Allowable Radial Load Pro [N]	[kgf]	SF	Input Capacity Symbol	- Frame Size	- Reduction Ratio		CNHM CHHM	CNFM CHFM	CNVM CVVM
			1370	**140**	**1.04**				**1290**	**132**	**1.04**	**1**	**- 6070SK**	**- 6**	***3**	**B-98**	**-**	**B-133**
			1370	140	1.30				1290	132	1.30	1	- 6075SK	- 6	*3	B-98	-	B-133
			1580	161	1.73				1520	155	1.73	1	- 6080SK	- 6	*3	B-98	-	B-133
			1580	161	2.16				1520	155	2.16	1	- 6085SK	- 6	*3	B-98	-	B-133
			2880	294	2.55				2750	280	2.55	1	- 6090SK	- 6	*3	B-98	-	B-133
242	28.2	2.87	2880	294	3.03	292	23.3	2.38	2750	280	3.03	1	- 6095SK	- 6	*3	B-98	-	B-133
			2880	294	3.56				2750	280	3.56	1	- 6100SK	- 6	*3	B-99	-	B-134
			1900	**193**	**1.04**				**1790**	**182**	**1.04**	**1**	**- 6085**	**- 6**		**B-100**	**B-116**	**B-135**
			2840	290	1.53				2670	273	1.53	1	- 6090	- 6		B-100	B-116	B-135
			2840	290	2.03				2670	273	2.03	1	- 6095	- 6		B-100	B-116	B-135
			1510	154	0.98				1420	145	0.98	1	- 6075SK	- 8	*3	B-98	-	B-133
			1660	169	1.46				1590	162	1.46	1	- 6080SK	- 8	*3	B-98	-	B-133
			1660	169	1.83				1590	162	1.83	1	- 6085SK	- 8	*3	B-98	-	B-133
			3210	327	2.01				3060	312	2.01	1	- 6090SK	- 8	*3	B-98	-	B-133
181	37.5	3.83	3210	327	2.36	219	31.1	3.17	3060	312	2.36	1	- 6095SK	- 8	*3	B-98	-	B-133
			3210	327	2.82				3060	312	2.82	1	- 6100SK	- 8	*3	B-99	-	B-134
			3210	327	3.32				3060	312	3.32	1	- 6105SK	- 8	*3	B-99	-	B-134
			2050	**209**	**1.04**				**1930**	**197**	**1.04**	**1**	**- 6085**	**- 8**		**B-100**	**B-116**	**B-135**
			3160	322	1.53				2980	304	1.53	1	- 6090	- 8		B-100	B-116	B-135
			3160	322	2.03				2980	304	2.03	1	- 6095	- 8		B-100	B-116	B-135
			1740	**177**	**1.17**				**1680**	**171**	**1.17**	**1**	**- 6080SK**	**- 10**	***3**	**B-98**	**-**	**B-133**
			1740	177	1.47				1680	171	1.47	1	- 6085SK	- 10	*3	B-98	-	B-133
145	46.9	4.78	3380	345	1.87	175	38.9	3.96	3240	330	1.87	1	- 6090SK	- 10	*3	B-98	-	B-133
			3380	345	2.36				3240	330	2.36	1	- 6095SK	- 10	*3	B-98	-	B-133
			3380	345	2.64				3240	330	2.64	1	- 6100SK	- 10	*3	B-99	-	B-134
			3380	345	2.93				3240	330	2.93	1	- 6105SK	- 10	*3	B-99	-	B-134
			2250	**230**	**1.04**				**2130**	**217**	**1.04**	**1**	**- 6085**	**- 11**		**B-100**	**B-116**	**B-135**
132	51.6	5.26	3340	340	1.53	159	42.8	4.36	3340	340	1.53	1	- 6090	- 11		B-100	B-116	B-135
			3340	340	2.03				3340	340	2.03	1	- 6095	- 11		B-100	B-116	B-135
			2410	**246**	**1.04**				**2280**	**233**	**1.04**	**1**	**- 6085**	**- 13**		**B-100**	**B-116**	**B-135**
112	61.0	6.22	3340	340	1.53	135	50.5	5.15	3340	340	1.53	1	- 6090	- 13		B-100	B-116	B-135
			3340	340	2.03				3340	340	2.03	1	- 6095	- 13		B-100	B-116	B-135
			2490	**253**	**1.04**				**2350**	**240**	**1.04**	**1**	**- 6085**	**- 15**		**B-100**	**B-116**	**B-135**
96.7	70.4	7.18	3340	340	1.53	117	58.3	5.95	3340	340	1.53	1	- 6090	- 15		B-100	B-116	B-135
			3340	340	2.03				3340	340	2.03	1	- 6095	- 15		B-100	B-116	B-135
			2560	**261**	**1.04**				**2460**	**251**	**1.04**	**1**	**- 6085**	**- 17**		**B-100**	**B-116**	**B-135**
85.3	79.8	8.13	3340	340	1.53	103	66.1	6.74	3340	340	1.53	1	- 6090	- 17		B-100	B-116	B-135
			3340	340	2.03				3340	340	2.03	1	- 6095	- 17		B-100	B-116	B-135
			5400	550	2.65				5400	550	2.65	1	- 6100	- 17		B-101	B-117	B-136
			3340	**340**	**1.01**				**3340**	**340**	**1.01**	**1**	**- 6090**	**- 21**		**B-100**	**B-116**	**B-135**
69.0	98.5	10.0	3340	340	2.01	83.3	81.7	8.32	3340	340	2.03	1	- 6095	- 21		B-100	B-116	B-135
			5400	550	2.53				5400	550	2.57	1	- 6100	- 21		B-101	B-117	B-136
			3340	**340**	**1.15**				**3340**	**340**	**1.15**	**1**	**- 6095**	**- 25**		**B-100**	**B-116**	**B-135**
			5400	550	1.69				5400	550	1.69	1	- 6100	- 25		B-101	B-117	B-136
58.0	117	12.0	5400	550	2.23	70.0	97.2	9.91	5400	550	2.23	1	- 6105	- 25		B-101	B-117	B-136
			7240	738	2.55				6810	694	2.55	1	- 6110	- 25		B-101	B-117	B-136
			7240	738	2.96				6810	694	2.96	1	- 6115	- 25		B-101	B-117	B-136
			3320	**338**	**1.05**				**3340**	**340**	**1.05**	**1**	**- 6095**	**- 29**		**B-100**	**B-116**	**B-135**
			5400	550	1.61				5400	550	1.61	1	- 6100	- 29		B-101	B-117	B-136
50.0	136	13.9	5400	550	2.12	60.3	113	11.5	5400	550	2.12	1	- 6105	- 29		B-101	B-117	B-136
			7410	756	2.53				7000	714	2.53	1	- 6110	- 29		B-101	B-117	B-136
			7410	756	2.96				7000	714	2.96	1	- 6115	- 29		B-101	B-117	B-136

6. "*2" indicate models manufactured with reducer and motor separately mounted on a common baseplate (horizontal shaft direction) or on an adaptor (vertical shaft direction). Consult us for details, including dimensions.
7. Allowable radial load (Pro) is the value at the midpoint of the slow speed shaft.
8. "*3" indicate models with reduction ratios equal to nominal ratio. Refer to Table A-3 "6000SK Series (Actual Reduction Ratio)" on page A-4 for actual reduction ratio. Indicated reduction ratio is the same as actual reduction ratio for other models.
9. Maintain torque load during operation within "Output torque" in the table for models with "*1" in the SF column. They cannot be operated with 100% motor rating.

Selection Tables Gearmotors

n_1: Motor Speed

0.75 kW	Hz		50Hz		60Hz	
	P		4	6	4	6
	n_1	r/min	1450	980	1750	1165

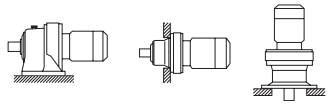

CHHM/CNHM CHFM/CNFM CVVM/CNVM

50Hz						60Hz						Nomenclature				Page of Dimension Sheet		
Output Speed n_2 [r/min]	Output Torque Tout [N·m]	Output Torque Tout [kgf·m]	Allowable Radial Load Pro [N]	Allowable Radial Load Pro [kgf]	SF	Output Speed n_2 [r/min]	Output Torque Tout [N·m]	Output Torque Tout [kgf·m]	Allowable Radial Load Pro [N]	Allowable Radial Load Pro [kgf]	SF	Input Capacity Symbol	-	Frame Size	- Reduction Ratio	CNHM CHHM	CNFM CHFM	CNVM CVVM
			3270	**334**	**1.01**				**3330**	**339**	**1.01**	**1**	**-**	**6095**	**- 35**	**B-100**	**B-116**	**B-135**
			5400	550	1.30				5400	550	1.30	1	-	6100	- 35	B-101	B-117	B-136
41.4	164	16.7	5400	550	1.60	50.0	136	13.9	5400	550	1.60	1	-	6105	- 35	B-101	B-117	B-136
			7470	761	2.00				7490	764	2.00	1	-	6110	- 35	B-101	B-117	B-136
			7470	761	2.41				7490	764	2.41	1	-	6115	- 35	B-101	B-117	B-136
			3210	328	0.80				3280	334	0.80	1	-	6095	- 43	B-100	B-116	B-135
			5400	**550**	**1.04**				**5400**	**550**	**1.04**	**1**	**-**	**6100**	**- 43**	**B-101**	**B-117**	**B-136**
33.7	202	20.6	5400	550	1.44	40.7	167	17.0	5400	550	1.44	1	-	6105	- 43	B-101	B-117	B-136
			7610	776	1.73				7610	776	1.73	1	-	6110	- 43	B-101	B-117	B-136
			7610	776	2.03				7610	776	2.03	1	-	6115	- 43	B-101	B-117	B-136
			9810	1000	2.55				9640	983	2.55	1	-	6120	- 43	B-101	B-117	B-136
			5400	**550**	**1.03**				**5390**	**549**	**1.03**	**1**	**-**	**6105**	**- 51**	**B-101**	**B-117**	**B-136**
			7610	776	1.26				7610	776	1.26	1	-	6110	- 51	B-101	B-117	B-136
28.4	239	24.4	7610	776	1.48	34.3	198	20.2	7610	776	1.48	1	-	6115	- 51	B-101	B-117	B-136
			9810	1000	2.17				9810	1000	2.29	1	-	6120	- 51	B-101	B-117	B-136
			9810	1000	2.63				9810	1000	3.04	1	-	6125	- 51	B-101	B-117	B-136
			5400	550	0.91				5370	548	0.94	1	-	6105	- 59	B-101	B-117	B-136
			7610	**776**	**1.15**				**7610**	**776**	**1.15**	**1**	**-**	**6110**	**- 59**	**B-101**	**B-117**	**B-136**
24.6	277	28.2	7610	776	1.35	29.7	229	23.4	7610	776	1.35	1	-	6115	- 59	B-101	B-117	B-136
			9810	1000	1.73				9810	1000	1.73	1	-	6120	- 59	B-101	B-117	B-136
			9810	1000	2.16				9810	1000	2.16	1	-	6125	- 59	B-101	B-117	B-136
			13200	1340	2.81				12400	1270	2.92	1	-	6130	- 59	B-102	B-118	B-137
			7610	775	1.01				7610	776	1.01	1	-	6115	- 71	B-101	B-117	B-136
			9810	**1000**	**1.28**				**9810**	**1000**	**1.28**	**1**	**-**	**6120**	**- 71**	**B-101**	**B-117**	**B-136**
20.4	333	34.0	9810	1000	1.52	24.6	276	28.1	9810	1000	1.60	1	-	6125	- 71	B-101	B-117	B-136
			14000	1420	2.35				13100	1340	2.44	1	-	6130	- 71	B-102	B-118	B-137
			14000	1420	2.71				13100	1340	2.89	1	-	6135	- 71	B-102	B-118	B-137
			7550	770	1.01				7610	776	1.01	1	-	6115	- 87	B-101	B-117	B-136
			9810	**1000**	**1.26**				**9810**	**1000**	**1.26**	**1**	**-**	**6120**	**- 87**	**B-101**	**B-117**	**B-136**
			9810	1000	1.37				9810	1000	1.51	1	-	6125	- 87	B-101	B-117	B-136
16.7	408	41.6	14700	1500	1.89	20.1	338	34.5	14200	1440	1.89	1	-	6130	- 87	B-102	B-118	B-137
			14700	1500	2.20				14200	1440	2.55	1	-	6135	- 87	B-102	B-118	B-137
			16000	1630	2.64				16000	1630	2.64	1	-	6140	- 87	B-102	B-118	B-137
			16000	1630	2.88				16000	1630	3.31	1	-	6145	- 87	B-102	B-118	B-137
			9810	1000	1.14				9810	1000	1.37	1	-	6120DB	- 104	B-108	B-124	B-143
			9810	1000	1.36				9810	1000	1.64	1	-	6125DB	- 104	B-108	B-124	B-143
			14700	1500	1.69				14700	1500	2.04	1	-	6130DB	- 104	B-109	B-125	B-144
			14700	1500	2.03				14700	1500	2.13	1	-	6135DB	- 104	B-109	B-125	B-144
13.9	462	47.1	14700	1500	2.03	16.8	383	39.1	14700	1500	2.45	1	-	6135DC	- 104	B-109	B-125	B-144
			16000	1630	2.13				16000	1630	2.13	1	-	6140DB	- 104	B-109	B-125	B-144
			16000	1630	2.65				16000	1630	3.20	1	-	6140DC	- 104	B-109	B-125	B-144
			16000	1630	2.96				16000	1630	3.58	1	-	6145DC	- 104	B-109	B-125	B-144
			9810	1000	1.16				9810	1000	1.40	1	-	6125DB	- 121	B-108	B-124	B-143
			14700	1500	1.45				14700	1500	1.75	1	-	6130DB	- 121	B-109	B-125	B-144
			14700	1500	1.75				14700	1500	2.11	1	-	6135DB	- 121	B-109	B-125	B-144
12.0	538	54.8	16000	1630	2.13	14.5	446	45.4	16000	1630	2.13	1	-	6140DB	- 121	B-109	B-125	B-144
			16000	1630	2.28				16000	1630	2.75	1	-	6140DC	- 121	B-109	B-125	B-144
			16000	1630	2.40				16000	1630	2.90	1	-	6145DC	- 121	B-109	B-125	B-144

1. Combinations in **bold** are the recommended models for operations for 10 hours/day with uniform load (service factor is about 1.0 for motor rating at 50Hz).
2. Motor slippage may affect n_1 and n_2. Refer to technical data for details.
3. CNHM, CHHM, CNFM, CHFM, CNVM, and CVVM indicate types. Refer to page B-10 for details.
4. Lubrication method is different for each model. Refer to "Lubrication" section in page F-4~F-5 for details.
5. "6" at the end of "input capacity symbol" indicates models with 6P motor. Other models come with 4P motor.

Selection Tables Gearmotors

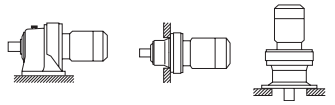

CHHM/CNHM CHFM/CNFM CVVM/CNVM

n1: Motor Speed

0.75 kW	Hz	50Hz		60Hz	
	P	4	6	4	6
	n1 r/min	1450	980	1750	1165

50Hz						60Hz						Nomenclature	Page of Dimension Sheet		
Output Speed n2 [r/min]	Output Torque Tout [N·m]	[kgf·m]	Allowable Radial Load Pro [N]	[kgf]	SF	Output Speed n2 [r/min]	Output Torque Tout [N·m]	[kgf·m]	Allowable Radial Load Pro [N]	[kgf]	SF	Input Capacity Symbol - Frame Size - Reduction Ratio	CNHM CHHM	CNFM CHFM	CNVM CVVM
10.1	525	53.5	9810	1000	*1	12.2	525	53.5	9810	1000	*1	1 - 6120DB - 143	B-108	B-124	B-143
	636	64.8	9810	1000	0.98		527	53.7	9810	1000	1.20	1 - 6125DB - 143	B-108	B-124	B-143
			14700	1500	1.23				14700	1500	1.48	1 - 6130DB - 143	B-109	B-125	B-144
			14700	1500	1.48				14700	1500	1.78	1 - 6135DB - 143	B-109	B-125	B-144
			16000	1630	1.93				16000	1630	2.13	1 - 6140DB - 143	B-109	B-125	B-144
			16000	1630	1.93				16000	1630	2.33	1 - 6140DC - 143	B-109	B-125	B-144
			16000	1630	2.13				16000	1630	2.13	1 - 6145DB - 143	B-109	B-125	B-144
			16000	1630	2.15				16000	1630	2.60	1 - 6145DC - 143	B-109	B-125	B-144
			22100	2250	2.76				22100	2250	3.33	1 - 6160DB - 143	B-110	B-126	B-145
8.79	525	53.5	9810	1000	*1	10.6	525	53.5	9810	1000	*1	1 - 6120DB - 165	B-108	B-124	B-143
	734	74.8	9810	1000	0.86		608	62.0	9810	1000	1.04	1 - 6125DB - 165	B-108	B-124	B-143
			14700	**1500**	**1.06**				**14700**	**1500**	**1.28**	**1 - 6130DB - 165**	**B-109**	**B-125**	**B-144**
			14700	1500	1.28				14700	1500	1.55	1 - 6135DB - 165	B-109	B-125	B-144
			16000	1630	1.67				16000	1630	2.02	1 - 6140DB - 165	B-109	B-125	B-144
			16000	1630	1.85				16000	1630	2.13	1 - 6145DB - 165	B-109	B-125	B-144
			16000	1630	1.85				16000	1630	2.23	1 - 6145DC - 165	B-109	B-125	B-144
			22100	2250	2.13				22100	2250	2.13	1 - 6160DA - 165	B-110	B-126	B-145
			22100	2250	2.39				22100	2250	2.89	1 - 6160DB - 165	B-110	B-126	B-145
			22100	2250	2.86				22100	2250	3.46	1 - 6165DB - 165	B-110	B-126	B-145
7.44	630	64.2	9810	1000	*1	8.97	630	64.2	9810	1000	*1	1 - 6125DB - 195	B-108	B-124	B-143
	867	88.4	14700	1500	1.08		718	73.2	14700	1500	1.31	1 - 6135DB - 195	B-109	B-125	B-144
			16000	1630	1.41				16000	1630	1.71	1 - 6140DB - 195	B-109	B-125	B-144
			16000	1630	1.57				16000	1630	1.89	1 - 6145DB - 195	B-109	B-125	B-144
			22100	2250	2.02				22100	2250	2.13	1 - 6160DA - 195	B-110	B-126	B-145
			22100	2250	2.02				22100	2250	2.44	1 - 6160DB - 195	B-110	B-126	B-145
			22100	2250	2.13				22100	2250	2.13	1 - 6165DA - 195	B-110	B-126	B-145
			22100	2250	2.42				22100	2250	2.92	1 - 6165DB - 195	B-110	B-126	B-145
			29500	3010	2.92				29500	3010	3.52	1 - 6170DB - 195	B-110	B-126	B-145
6.28	630	64.2	9810	1000	*1	7.58	630	64.2	9810	1000	*1	1 - 6125DB - 231	B-108	B-124	B-143
	780	79.5	14700	1500	*1		780	79.5	14700	1500	*1	1 - 6130DB - 231	B-109	B-125	B-144
	1030	105	14700	1500	0.92		851	86.7	14700	1500	1.10	1 - 6135DB - 231	B-109	B-125	B-144
			16000	1630	1.19				16000	1630	1.44	1 - 6140DB - 231	B-109	B-125	B-144
			16000	1630	1.30				16000	1630	1.57	1 - 6145DB - 231	B-109	B-125	B-144
			22100	2250	1.71				22100	2250	2.06	1 - 6160DA - 231	B-110	B-126	B-145
			22100	2250	2.04				22100	2250	2.13	1 - 6165DA - 231	B-110	B-126	B-145
			22100	2250	2.04				22100	2250	2.47	1 - 6165DB - 231	B-110	B-126	B-145
			29500	3010	2.13				29500	3010	2.13	1 - 6170DA - 231	B-110	B-126	B-145
			29500	3010	2.46				29500	3010	2.97	1 - 6170DB - 231	B-110	B-126	B-145
5.31	780	79.5	14700	1500	*1	6.41	780	79.5	14700	1500	*1	1 - 6130DB - 273	B-109	B-125	B-144
	940	95.8	14700	1500	*1		940	95.8	14700	1500	*1	1 - 6135DB - 273	B-109	B-125	B-144
	1210	124	**16000**	**1630**	**1.01**		1010	103	**16000**	**1630**	**1.22**	**1 - 6140DB - 273**	**B-109**	**B-125**	**B-144**
			16000	1630	1.10				16000	1630	1.33	1 - 6145DB - 273	B-109	B-125	B-144
			22100	2250	1.45				22100	2250	1.75	1 - 6160DA - 273	B-110	B-126	B-145
			22100	2250	1.73				22100	2250	2.09	1 - 6165DA - 273	B-110	B-126	B-145
			29500	3010	2.08				29500	3010	2.13	1 - 6170DA - 273	B-110	B-126	B-145
			29500	3010	2.08				29500	3010	2.52	1 - 6170DB - 273	B-110	B-126	B-145
			29500	3010	2.13				29500	3010	2.13	1 - 6175DA - 273	B-110	B-126	B-145
			29500	3010	2.60				29500	3010	3.13	1 - 6175DB - 273	B-110	B-126	B-145

6. "*2" indicate models manufactured with reducer and motor separately mounted on a common baseplate (horizontal shaft direction) or on an adaptor (vertical shaft direction). Consult us for details, including dimensions.
7. Allowable radial load (Pro) is the value at the midpoint of the slow speed shaft.
8. "*3" indicate models with reduction ratios equal to nominal ratio. Refer to Table A-3 "6000SK Series (Actual Reduction Ratio)" on page A-4 for actual reduction ratio. Indicated reduction ratio is the same as actual reduction ratio for other models.
9. Maintain torque load during operation within "Output torque" in the table for models with "*1" in the SF column. They cannot be operated with 100% motor rating.

Selection Tables Gearmotors

0.75 kW

n_1: Motor Speed

Hz	50Hz		60Hz	
P	4	6	4	6
n_1 r/min	1450	980	1750	1165

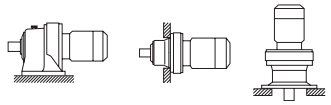

CHHM/CNHM CHFM/CNFM CVVM/CNVM

50Hz						60Hz						Nomenclature	Page of Dimension Sheet		
Output Speed n_2 [r/min]	Output Torque Tout [N·m]	[kgf·m]	Allowable Radial Load Pro [N]	[kgf]	SF	Output Speed n_2 [r/min]	Output Torque Tout [N·m]	[kgf·m]	Allowable Radial Load Pro [N]	[kgf]	SF	Input Capacity Symbol - Frame Size - Reduction Ratio	CNHM CHHM	CNFM CHFM	CNVM CVVM
4.55	940	95.8	14700	1500	*1	5.49	940	95.8	14700	1500	*1	1 - 6135DB - 319	B-109	B-125	B-144
	1420	145	15500	1580	0.97		1180	120	16000	1630	1.17	1 - 6145DB - 319	B-109	B-125	B-144
			22100	2250	1.24				22100	2250	1.49	1 - 6160DA - 319	B-110	B-126	B-145
			22100	2250	1.48				22100	2250	1.79	1 - 6165DA - 319	B-110	B-126	B-145
			29500	3010	1.78				29500	3010	2.13	1 - 6170DA - 319	B-110	B-126	B-145
			29500	3010	1.78				29500	3010	2.15	1 - 6170DB - 319	B-110	B-126	B-145
			29500	3010	2.13				29500	3010	2.13	1 - 6175DA - 319	B-110	B-126	B-145
			29500	3010	2.22				29500	3010	2.68	1 - 6175DB - 319	B-110	B-126	B-145
			41700	4250	2.86				41700	4250	3.45	1 - 6180DA - 319	B-110	B-126	B-145
3.85	1230	125	16000	1630	*1	4.64	1230	125	16000	1630	*1	1 - 6140DB - 377	B-109	B-125	B-144
	1370	140	15800	1610	*1		1370	140	15800	1610	*1	1 - 6145DB - 377	B-109	B-125	B-144
	1680	171	14100	1440	0.82		1390	142	15700	1600	0.98	1 - 6145DB - 377	B-109	B-125	B-144
			22100	**2250**	**1.05**				**22100**	**2250**	**1.26**	**1 - 6160DA - 377**	**B-110**	**B-126**	**B-145**
			22100	2250	1.25				22100	2250	1.51	1 - 6165DA - 377	B-110	B-126	B-145
			29500	3010	1.51				29500	3010	1.82	1 - 6170DA - 377	B-110	B-126	B-145
			29500	3010	1.88				29500	3010	2.13	1 - 6175DA - 377	B-110	B-126	B-145
			29500	3010	1.88				29500	3010	2.27	1 - 6175DB - 377	B-110	B-126	B-145
			41700	4250	2.42				41700	4250	2.92	1 - 6180DA - 377	B-110	B-126	B-145
			41700	4250	2.98				41700	4250	3.60	1 - 6185DA - 377	B-110	B-126	B-145
3.07	1370	140	15700	1600	*1	3.70	1370	140	15700	1600	*1	1 - 6145DB - 473	B-109	B-125	B-144
	1740	177	22100	2250	*1		1740	177	22100	2250	*1	1 - 6160DA - 473	B-110	B-126	B-145
	2100	214	**22100**	**2250**	**1.00**		1740	178	**22100**	**2250**	**1.21**	**1 - 6165DA - 473**	**B-110**	**B-126**	**B-145**
			29500	3010	1.20				29500	3010	1.45	1 - 6170DA - 473	B-110	B-126	B-145
			29500	3010	1.50				29500	3010	1.81	1 - 6175DA - 473	B-110	B-126	B-145
			41700	4250	1.93				41700	4250	2.33	1 - 6180DA - 473	B-110	B-126	B-145
			41700	4250	2.38				41700	4250	2.87	1 - 6185DA - 473	B-110	B-126	B-145
2.59	1740	177	22100	2250	*1	3.13	1740	177	22100	2250	*1	1 - 6160DA - 559	B-110	B-126	B-145
	2490	253	22100	2250	0.85		2060	210	22100	2250	1.02	1 - 6165DA - 559	B-110	B-126	B-145
			29500	**3010**	**1.02**				**29500**	**3010**	**1.23**	**1 - 6170DA - 559**	**B-110**	**B-126**	**B-145**
			29500	3010	1.27				29500	3010	1.53	1 - 6175DA - 559	B-110	B-126	B-145
			41700	4250	1.63				41700	4250	1.97	1 - 6180DA - 559	B-110	B-126	B-145
			41700	4250	2.01				41700	4250	2.43	1 - 6185DA - 559	B-110	B-126	B-145
			59000	6010	2.57				59000	6010	3.10	1 - 6190DA - 559	B-111	B-128	B-147
2.23	2100	214	22100	2250	*1	2.70	2100	214	22100	2250	*1	1 - 6165DA - 649	B-110	B-126	B-145
	2890	294	29500	3010	1.09		2390	244	29500	3010	1.32	1 - 6175DA - 649	B-110	B-126	B-145
			41700	4250	1.40				41700	4250	1.69	1 - 6180DA - 649	B-110	B-126	B-145
			41700	4250	1.73				41700	4250	2.09	1 - 6185DA - 649	B-110	B-126	B-145
			59000	6010	2.21				59000	6010	2.67	1 - 6190DA - 649	B-111	B-128	B-147
			59000	6010	2.76				59000	6010	3.33	1 - 6195DA - 649	B-111	B-128	B-147
1.98	2100	214	22100	2250	*1	2.39	2100	214	22100	2250	*1	1 - 6165DA - 731	B-110	B-126	B-145
	2530	258	29500	3010	*1		2530	258	29500	3010	*1	1 - 6170DA - 731	B-110	B-126	B-145
	3250	331	29500	3010	0.97		2690	274	29500	3010	1.17	1 - 6175DA - 731	B-110	B-126	B-145
			41700	4250	1.25				41700	4250	1.51	1 - 6180DA - 731	B-110	B-126	B-145
			41700	4250	1.54				41700	4250	1.86	1 - 6185DA - 731	B-110	B-126	B-145
			59000	6010	1.96				59000	6010	2.37	1 - 6190DA - 731	B-111	B-128	B-147
			59000	6010	2.45				59000	6010	2.96	1 - 6195DA - 731	B-111	B-128	B-147
1.72	2530	258	29500	3010	*1	2.08	2530	258	29500	3010	*1	1 - 6170DA - 841	B-110	B-126	B-145
	3740	381	29500	3010	0.84		3100	316	29500	3010	1.02	1 - 6175DA - 841	B-110	B-126	B-145
			41700	4250	1.08				41700	4250	1.31	1 - 6180DA - 841	B-110	B-126	B-145
			41700	4250	1.34				41700	4250	1.61	1 - 6185DA - 841	B-110	B-126	B-145
			59000	6010	1.71				59000	6010	2.06	1 - 6190DA - 841	B-111	B-128	B-147
			59000	6010	2.13				59000	6010	2.57	1 - 6195DA - 841	B-111	B-128	B-147
1.45	3150	321	29500	3010	*1	1.74	3150	321	29500	3010	*1	1 - 6175DA - 1003	B-110	B-126	B-145
	4460	455	41700	4250	1.12		3690	377	41700	4250	1.35	1 - 6185DA - 1003	B-110	B-126	B-145
			59000	6010	1.43				59000	6010	1.73	1 - 6190DA - 1003	B-111	B-128	B-147
			59000	6010	1.79				59000	6010	2.15	1 - 6195DA - 1003	B-111	B-128	B-147

1. Combinations in **bold** are the recommended models for operations for 10 hours/day with uniform load (service factor is about 1.0 for motor rating at 50Hz).
2. Motor slippage may affect n_1 and n_2. Refer to technical data for details.
3. CNHM, CHHM, CNFM, CHFM, CNVM, and CVVM indicate types. Refer to page B-10 for details.
4. Lubrication method is different for each model. Refer to "Lubrication" section in page F-4~F-5 for details.
5. "6" at the end of "input capacity symbol" indicates models with 6P motor. Other models come with 4P motor.

Selection Tables Gearmotors

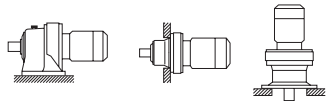

CHHM/CNHM CHFM/CNFM CVVM/CNVM

n1: Motor Speed

0.75 kW	Hz	50Hz		60Hz	
	P	4	6	4	6
	n1 r/min	1450	980	1750	1165

50Hz						60Hz						Nomenclature	Page of Dimension Sheet		
Output Speed n_2 [r/min]	Output Torque Tout [N·m]	[kgf·m]	Allowable Radial Load Pro [N]	[kgf]	SF	Output Speed n_2 [r/min]	Output Torque Tout [N·m]	[kgf·m]	Allowable Radial Load Pro [N]	[kgf]	SF	Input Capacity Symbol - Frame Size - Reduction Ratio	CNHM CHHM	CNFM CHFM	CNVM CVVM
1.16	4060	414	41700	4250	*1	1.40	4060	414	41700	4250	*1	1 - 6180DA - 1247	B-110	B-126	B-145
			41700	4250	0.90				41700	4250	1.09	1 - 6185DA - 1247	B-110	B-126	B-145
	5540	565	59000	6010	1.15		4590	468	59000	6010	1.39	1 - 6190DA - 1247	B-111	B-128	B-147
			59000	6010	1.44				59000	6010	1.73	1 - 6195DA - 1247	B-111	B-128	B-147
0.980	4060	414	41700	4250	*1	1.18	4060	414	41700	4250	*1	1 - 6180DA - 1479	B-110	B-126	B-145
	5000	510	41700	4250	*1		5000	510	41700	4250	*1	1 - 6185DA - 1479	B-110	B-126	B-145
	6580	670	58800	5990	1.21		5450	555	59000	6010	1.46	1 - 6195DA - 1479	B-111	B-128	B-147
0.784	5000	510	41700	4250	*1	0.946	5000	510	41700	4250	*1	1 - 6185DA - 1849	B-110	B-126	B-145
	6380	650	59000	6010	*1		6380	650	59000	6010	*1	1 - 6190DA - 1849	B-111	B-128	B-147
	8220	838	58900	6000	0.97		6810	694	59000	6010	1.17	1 - 6195DA - 1849	B-111	B-128	B-147
0.702	5000	510	41600	4240	*1	0.847	5000	510	41600	4240	*1	1 - 6185DA - 2065	B-110	B-126	B-145
	6380	650	58600	5970	*1		6380	650	58600	5970	*1	1 - 6190DA - 2065	B-111	B-128	B-147
	9180	936	57800	5890	0.87		7610	775	58200	5940	1.05	1 - 6195DA - 2065	B-111	B-128	B-147
0.572	6380	650	58600	5970	*1	0.690	6380	650	58600	5970	*1	1 - 6190DA - 2537	B-111	B-128	B-147
	7960	811	58100	5930	*1		7960	811	58100	5930	*1	1 - 6195DA - 2537	B-111	B-128	B-147
	9300	948	84100	8570	*1		9300	948	84100	8570	*1	1 - 6205DA - 2537	B-112	B-129	B-148
	11300	1150	84100	8570	0.82		9350	953	84100	8570	1.00	1 - 6205DA - 2537	B-112	B-129	B-148
0.476	6380	650	58900	6000	*1	0.575	6380	650	58900	6000	*1	1 - 6190DA - 3045	B-111	B-128	B-147
	7960	811	58400	5950	*1		7960	811	58400	5950	*1	1 - 6195DA - 3045	B-111	B-128	B-147
	8760	893	84100	8570	*1		8760	893	84100	8570	*1	1 - 6205DA - 3045	B-112	B-129	B-148
0.417	6380	650	58600	5970	*1	0.503	6380	650	58600	5970	*1	1 - 6190DA - 3481	B-111	B-128	B-147
	7960	811	58100	5930	*1		7960	811	58100	5930	*1	1 - 6195DA - 3481	B-111	B-128	B-147
	9300	948	84100	8570	*1		9300	948	84100	8570	*1	1 - 6205DA - 3481	B-112	B-129	B-148
0.327	6380	650	58900	6000	*1	0.394	6380	650	58900	6000	*1	1 - 6190DA - 4437	B-111	B-128	B-147
	7960	811	58400	5950	*1		7960	811	58400	5950	*1	1 - 6195DA - 4437	B-111	B-128	B-147
	8760	893	84100	8570	*1		8760	893	84100	8570	*1	1 - 6205DA - 4437	B-112	B-129	B-148
0.282	6380	650	58900	6000	*1	0.341	6380	650	58900	6000	*1	1 - 6190DA - 5133	B-111	B-128	B-147
	7960	811	58400	5950	*1		7960	811	58400	5950	*1	1 - 6195DA - 5133	B-111	B-128	B-147
	9300	948	84100	8570	*1		9300	948	84100	8570	*1	1 - 6205DA - 5133	B-112	B-129	B-148
0.235	6380	650	58900	6000	*1	0.283	6380	650	58900	6000	*1	1 - 6190DA - 6177	B-111	B-128	B-147
	7960	811	58400	5950	*1		7960	811	58400	5950	*1	1 - 6195DA - 6177	B-111	B-128	B-147
	8760	893	84100	8570	*1		8760	893	84100	8570	*1	1 - 6205DA - 6177	B-112	B-129	B-148
0.192	6380	650	58900	6000	*1	0.231	6380	650	58900	6000	*1	1 - 6190DA - 7569	B-111	B-128	B-147
	7960	811	58400	5950	*1		7960	811	58400	5950	*1	1 - 6195DA - 7569	B-111	B-128	B-147
	8760	893	84100	8570	*1		8760	893	84100	8570	*1	1 - 6205DA - 7569	B-112	B-129	B-148

6. "*2" indicate models manufactured with reducer and motor separately mounted on a common baseplate (horizontal shaft direction) or on an adaptor (vertical shaft direction). Consult us for details, including dimensions.
7. Allowable radial load (Pro) is the value at the midpoint of the slow speed shaft.
8. "*3" indicate models with reduction ratios equal to nominal ratio. Refer to Table A-3 "6000SK Series (Actual Reduction Ratio)" on page A-4 for actual reduction ratio. Indicated reduction ratio is the same as actual reduction ratio for other models.
9. Maintain torque load during operation within "Output torque" in the table for models with "*1" in the SF column. They cannot be operated with 100% motor rating.

Selection Tables Gearmotors

n_1: Motor Speed

1.1 kW	Hz		50Hz		60Hz	
	P		4	6	4	6
	n_1	r/min	1450	980	1750	1165

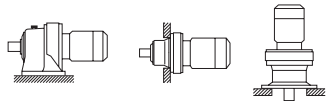

50Hz						60Hz						Nomenclature				Page of Dimension Sheet		
Output Speed n_2 [r/min]	Output Torque Tout [N·m]	[kgf·m]	Allowable Radial Load Pro [N]	[kgf]	SF	Output Speed n_2 [r/min]	Output Torque Tout [N·m]	[kgf·m]	Allowable Radial Load Pro [N]	[kgf]	SF	Input Capacity Symbol	-	Frame Size	- Reduction Ratio	CNHM CHHM	CNFM CHFM	CNVM CVVM
			1200	122	1.50				1140	116	1.50	1H -		6080SK	- 2.5 *3	B-98	-	B-133
			1200	122	1.87				1140	116	1.87	1H -		6085SK	- 2.5 *3	B-98	-	B-133
			2230	227	2.18				2120	216	2.18	1H -		6090SK	- 2.5 *3	B-98	-	B-133
580	17.2	1.75	2230	227	2.46	700	14.3	1.45	2120	216	2.46	1H -		6095SK	- 2.5 *3	B-98	-	B-133
			2230	227	2.90				2120	216	2.90	1H -		6100SK	- 2.5 *3	B-99	-	B-134
			2230	227	3.41				2120	216	3.41	1H -		6105SK	- 2.5 *3	B-99	-	B-134
			1250	127	1.50				1200	122	1.50	1H -		6080SK	- 3 *3	B-98	-	B-133
			1250	127	1.87				1200	122	1.87	1H -		6085SK	- 3 *3	B-98	-	B-133
483	20.6	2.10	2310	235	2.13	583	17.1	1.74	2210	225	2.13	1H -		6090SK	- 3 *3	B-98	-	B-133
			2310	235	2.39				2210	225	2.39	1H -		6095SK	- 3 *3	B-98	-	B-133
			2310	235	3.00				2210	225	3.00	1H -		6100SK	- 3 *3	B-99	-	B-134
			1330	136	1.50				1290	131	1.50	1H -		6080SK	- 4 *3	B-98	-	B-133
			1330	136	1.87				1290	131	1.87	1H -		6085SK	- 4 *3	B-98	-	B-133
			2560	261	2.13				2450	250	2.13	1H -		6090SK	- 4 *3	B-98	-	B-133
363	27.5	2.81	2560	261	2.39	438	22.8	2.33	2450	250	2.39	1H -		6095SK	- 4 *3	B-98	-	B-133
			2560	261	2.93				2450	250	2.93	1H -		6100SK	- 4 *3	B-99	-	B-134
			2560	261	3.45				2450	250	3.45	1H -		6105SK	- 4 *3	B-99	-	B-134
			1420	145	1.41				1370	140	1.41	1H -		6080SK	- 5 *3	B-98	-	B-133
			1420	145	1.65				1370	140	1.65	1H -		6085SK	- 5 *3	B-98	-	B-133
			2740	279	2.03				2600	265	2.03	1H -		6090SK	- 5 *3	B-98	-	B-133
290	34.4	3.51	2740	279	2.39	350	28.5	2.91	2600	265	2.39	1H -		6095SK	- 5 *3	B-98	-	B-133
			2740	279	2.86				2600	265	2.86	1H -		6100SK	- 5 *3	B-99	-	B-134
			2740	279	3.36				2600	265	3.36	1H -		6105SK	- 5 *3	B-99	-	B-134
			1450	**148**	**1.18**				**1410**	**144**	**1.18**	**1H -**		**6080SK**	**- 6 *3**	**B-98**	**-**	**B-133**
			1450	148	1.47				1410	144	1.47	1H -		6085SK	- 6 *3	B-98	-	B-133
			2800	285	1.74				2670	272	1.74	1H -		6090SK	- 6 *3	B-98	-	B-133
			2800	285	2.06				2670	272	2.06	1H -		6095SK	- 6 *3	B-98	-	B-133
			2800	285	2.43				2670	272	2.43	1H -		6100SK	- 6 *3	B-99	-	B-134
242	41.3	4.21	2800	285	2.85	292	34.2	3.49	2670	272	2.85	1H -		6105SK	- 6 *3	B-99	-	B-134
			2820	287	1.05				2650	270	1.05	1H -		6090	- 6	B-100	B-116	B-135
			2820	287	1.38				2650	270	1.38	1H -		6095	- 6	B-100	B-116	B-135
			4140	422	2.14				3900	397	2.14	1H -		6100	- 6	B-101	B-117	B-136
			4140	422	2.89				3900	397	2.89	1H -		6105	- 6	B-101	B-117	B-136
			1490	**152**	**1.00**				**1450**	**148**	**1.00**	**1H -**		**6080SK**	**- 8 *3**	**B-98**	**-**	**B-133**
			1490	152	1.25				1450	148	1.25	1H -		6085SK	- 8 *3	B-98	-	B-133
			3060	312	1.37				2930	299	1.37	1H -		6090SK	- 8 *3	B-98	-	B-133
			3060	312	1.61				2930	299	1.61	1H -		6095SK	- 8 *3	B-98	-	B-133
			3060	312	1.92				2930	299	1.92	1H -		6100SK	- 8 *3	B-99	-	B-134
181	55.1	5.61	3060	312	2.26	219	45.6	4.65	2930	299	2.26	1H -		6105SK	- 8 *3	B-99	-	B-134
			4080	416	3.37				3870	395	3.37	1H -		6110SK	- 8 *3	B-99	-	B-134
			3130	319	1.05				2950	301	1.05	1H -		6090	- 8	B-100	B-116	B-135
			3130	319	1.38				2950	301	1.38	1H -		6095	- 8	B-100	B-116	B-135
			4620	471	2.14				4350	443	2.14	1H -		6100	- 8	B-101	B-117	B-136
			4620	471	2.89				4350	443	2.89	1H -		6105	- 8	B-101	B-117	B-136
			1540	**157**	**1.00**				**1510**	**154**	**1.00**	**1H -**		**6085SK**	**- 10 *3**	**B-98**	**-**	**B-133**
			3220	328	1.27				3070	313	1.27	1H -		6090SK	- 10 *3	B-98	-	B-133
			3220	328	1.61				3070	313	1.61	1H -		6095SK	- 10 *3	B-98	-	B-133
145	68.8	7.02	3220	328	1.80	175	57.0	5.81	3070	313	1.80	1H -		6100SK	- 10 *3	B-99	-	B-134
			3220	328	2.00				3070	313	2.00	1H -		6105SK	- 10 *3	B-99	-	B-134
			4400	449	2.78				4180	426	2.78	1H -		6110SK	- 10 *3	B-99	-	B-134
			4400	449	3.47				4180	426	3.47	1H -		6115SK	- 10 *3	B-99	-	B-134
			3340	**340**	**1.05**				**3340**	**340**	**1.05**	**1H -**		**6090**	**- 11**	**B-100**	**B-116**	**B-135**
			3340	340	1.38				3340	340	1.38	1H -		6095	- 11	B-100	B-116	B-135
132	75.7	7.72	5250	536	2.14	159	62.7	6.39	4950	504	2.14	1H -		6100	- 11	B-101	B-117	B-136
			5250	536	2.89				4950	504	2.89	1H -		6105	- 11	B-101	B-117	B-136

1. Combinations in **bold** are the recommended models for operations for 10 hours/day with uniform load (service factor is about 1.0 for motor rating at 50Hz).
2. Motor slippage may affect n_1 and n_2. Refer to technical data for details.
3. CNHM, CHHM, CNFM, CHFM, CNVM, and CVVM indicate types. Refer to page B-10 for details.
4. Lubrication method is different for each model. Refer to "Lubrication" section in page F-4~F-5 for details.
5. "6" at the end of "input capacity symbol" indicates models with 6P motor. Other models come with 4P motor.

Selection Tables Gearmotors

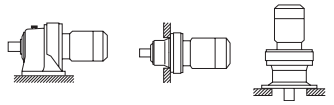

CHHM/CNHM CHFM/CNFM CVVM/CNVM

n1: Motor Speed

1.1 kW	Hz	50Hz		60Hz	
	P	4	6	4	6
	n1 r/min	1450	980	1750	1165

50Hz						60Hz						Nomenclature				Page of Dimension Sheet		
Output Speed n_2	Output Torque Tout		Allowable Radial Load Pro		SF	Output Speed n_2	Output Torque Tout		Allowable Radial Load Pro		SF	Input Capacity Symbol	- Frame Size	- Reduction Ratio		CNHM CHHM	CNFM CHFM	CNVM CVVM
[r/min]	[N·m]	[kgf·m]	[N]	[kgf]		[r/min]	[N·m]	[kgf·m]	[N]	[kgf]								
			3340	**340**	**1.05**				**3340**	**340**	**1.05**	**1H -**	**6090**	**- 13**		**B-100**	**B-116**	**B-135**
			3340	340	1.38				3340	340	1.38	1H -	6095	- 13		B-100	B-116	B-135
112	89.5	9.12	5400	550	2.14	135	74.1	7.56	5140	524	2.14	1H -	6100	- 13		B-101	B-117	B-136
			5400	550	2.89				5140	524	2.89	1H -	6105	- 13		B-101	B-117	B-136
			3340	**340**	**1.05**				**3340**	**340**	**1.05**	**1H -**	**6090**	**- 15**		**B-100**	**B-116**	**B-135**
			3340	340	1.38				3340	340	1.38	1H -	6095	- 15		B-100	B-116	B-135
96.7	103	10.5	5400	550	2.14	117	85.5	8.72	5400	550	2.14	1H -	6100	- 15		B-101	B-117	B-136
			5400	550	2.89				5400	550	2.89	1H -	6105	- 15		B-101	B-117	B-136
			3340	**340**	**1.05**				**3340**	**340**	**1.05**	**1H -**	**6090**	**- 17**		**B-100**	**B-116**	**B-135**
			3340	340	1.38				3340	340	1.38	1H -	6095	- 17		B-100	B-116	B-135
85.3	117	11.9	5400	550	1.81	103	96.9	9.88	5400	550	1.81	1H -	6100	- 17		B-101	B-117	B-136
			5400	550	2.24				5400	550	2.24	1H -	6105	- 17		B-101	B-117	B-136
			6660	679	2.89				6270	639	2.89	1H -	6110	- 17		B-101	B-117	B-136
			3340	340	1.37				3340	340	1.38	1H -	6095	- 21		B-100	B-116	B-135
			5400	550	1.73				5400	550	1.75	1H -	6100	- 21		B-101	B-117	B-136
69.0	145	14.7	5400	550	2.07	83.3	120	12.2	5400	550	2.13	1H -	6105	- 21		B-101	B-117	B-136
			7080	722	2.47				6670	679	2.47	1H -	6110	- 21		B-101	B-117	B-136
			7080	722	2.83				6670	679	2.83	1H -	6115	- 21		B-101	B-117	B-136
			5400	**550**	**1.15**				**5400**	**550**	**1.15**	**1H -**	**6100**	**- 25**		**B-101**	**B-117**	**B-136**
			5400	550	1.52				5400	550	1.52	1H -	6105	- 25		B-101	B-117	B-136
58.0	172	17.5	7180	732	1.74	70.0	143	14.5	6770	690	1.74	1H -	6110	- 25		B-101	B-117	B-136
			7180	732	2.02				6770	690	2.02	1H -	6115	- 25		B-101	B-117	B-136
			8700	887	2.81				8190	835	2.81	1H -	6120	- 25		B-101	B-117	B-136
			5400	**550**	**1.10**				**5400**	**550**	**1.10**	**1H -**	**6100**	**- 29**		**B-101**	**B-117**	**B-136**
			5400	550	1.45				5400	550	1.45	1H -	6105	- 29		B-101	B-117	B-136
50.0	200	20.3	7350	750	1.73	60.3	165	16.9	6960	709	1.73	1H -	6110	- 29		B-101	B-117	B-136
			7350	750	2.02				6960	709	2.02	1H -	6115	- 29		B-101	B-117	B-136
			9050	922	2.61				8510	868	2.72	1H -	6120	- 29		B-101	B-117	B-136
			5400	**550**	**1.09**				**5400**	**550**	**1.09**	**1H -**	**6105**	**- 35**		**B-101**	**B-117**	**B-136**
			7400	754	1.36				7430	758	1.36	1H -	6110	- 35		B-101	B-117	B-136
41.4	241	24.6	7400	754	1.65	50.0	200	20.3	7430	758	1.65	1H -	6115	- 35		B-101	B-117	B-136
			9560	975	2.15				9000	918	2.26	1H -	6120	- 35		B-101	B-117	B-136
			9560	975	2.62				9000	918	2.89	1H -	6125	- 35		B-101	B-117	B-136
			5400	550	0.98				5380	548	0.98	1H -	6105	- 43		B-101	B-117	B-136
			7610	**776**	**1.18**				**7610**	**776**	**1.18**	**1H -**	**6110**	**- 43**		**B-101**	**B-117**	**B-136**
			7610	776	1.38				7610	776	1.38	1H -	6115	- 43		B-101	B-117	B-136
33.7	296	30.2	9810	1000	1.74	40.7	245	25.0	9580	976	1.74	1H -	6120	- 43		B-101	B-117	B-136
			9810	1000	2.13				9580	976	2.16	1H -	6125	- 43		B-101	B-117	B-136
			12000	1220	2.64				11300	1150	2.72	1H -	6130	- 43		B-102	B-118	B-137
			7600	**775**	**1.01**				**7610**	**776**	**1.01**	**1H -**	**6115**	**- 51**		**B-101**	**B-117**	**B-136**
			9810	1000	1.48				9810	1000	1.56	1H -	6120	- 51		B-101	B-117	B-136
28.4	351	35.8	9810	1000	1.79	34.3	291	29.6	9810	1000	2.07	1H -	6125	- 51		B-101	B-117	B-136
			12500	1270	2.22				11800	1200	2.31	1H -	6130	- 51		B-102	B-118	B-137
			12500	1270	2.32				11800	1200	2.66	1H -	6135	- 51		B-102	B-118	B-137
			7570	772	0.92				7610	776	0.92	1H -	6115	- 59		B-101	B-117	B-136
			9810	**1000**	**1.18**				**9810**	**1000**	**1.18**	**1H -**	**6120**	**- 59**		**B-101**	**B-117**	**B-136**
			9810	1000	1.47				9810	1000	1.47	1H -	6125	- 59		B-101	B-117	B-136
24.6	406	41.4	13100	1340	1.92	29.7	336	34.3	12300	1260	1.99	1H -	6130	- 59		B-102	B-118	B-137
			13100	1340	2.22				12300	1260	2.29	1H -	6135	- 59		B-102	B-118	B-137
			16000	1630	2.69				16000	1630	2.69	1H -	6140	- 59		B-102	B-118	B-137
			16000	1630	2.89				16000	1630	3.32	1H -	6145	- 59		B-102	B-118	B-137
			9810	**1000**	**1.04**				**9810**	**1000**	**1.09**	**1H -**	**6125**	**- 71**		**B-101**	**B-117**	**B-136**
			13900	1410	1.60				13100	1330	1.66	1H -	6130	- 71		B-102	B-118	B-137
20.4	489	49.8	13900	1410	1.85	24.6	405	41.3	13100	1330	1.97	1H -	6135	- 71		B-102	B-118	B-137
			16000	1630	2.21				16000	1630	2.21	1H -	6140	- 71		B-102	B-118	B-137
			16000	1630	2.38				16000	1630	2.75	1H -	6145	- 71		B-102	B-118	B-137

6. "*2" indicate models manufactured with reducer and motor separately mounted on a common baseplate (horizontal shaft direction) or on an adaptor (vertical shaft direction). Consult us for details, including dimensions.
7. Allowable radial load (Pro) is the value at the midpoint of the slow speed shaft.
8. "*3" indicate models with reduction ratios equal to nominal ratio. Refer to Table A-3 "6000SK Series (Actual Reduction Ratio)" on page A-4 for actual reduction ratio. Indicated reduction ratio is the same as actual reduction ratio for other models.
9. Maintain torque load during operation within "Output torque" in the table for models with "*1" in the SF column. They cannot be operated with 100% motor rating.

Selection Tables Gearmotors

n_1: Motor Speed

1.1 kW	Hz		50Hz		60Hz	
	P		4	6	4	6
	n_1	r/min	1450	980	1750	1165

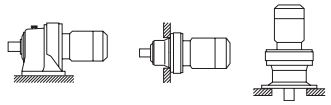

CHHM/CNHM CHFM/CNFM CVVM/CNVM

50Hz						60Hz						Nomenclature				Page of Dimension Sheet		
Output Speed n_2 [r/min]	Output Torque Tout [N·m]	[kgf·m]	Allowable Radial Load Pro [N]	[kgf]	SF	Output Speed n_2 [r/min]	Output Torque Tout [N·m]	[kgf·m]	Allowable Radial Load Pro [N]	[kgf]	SF	Input Capacity Symbol	-	Frame Size	- Reduction Ratio	CNHM CHHM	CNFM CHFM	CNVM CVVM
16.7	599	61.0	9620	981	0.94	20.1	496	50.6	9810	1000	1.03	1H -		6125	- 87	B-101	B-117	B-136
			14700	**1500**	**1.29**				**14100**	**1430**	**1.29**	**1H -**		**6130**	**- 87**	**B-102**	**B-118**	**B-137**
			14700	1500	1.50				14100	1430	1.74	1H -		6135	- 87	B-102	B-118	B-137
			16000	1630	1.80				16000	1630	1.80	1H -		6140	- 87	B-102	B-118	B-137
			16000	1630	1.96				16000	1630	2.25	1H -		6145	- 87	B-102	B-118	B-137
			22100	2250	2.93				22100	2250	3.15	1H -		6160	- 87	B-103	B-119	B-138
13.9	525	53.5	9810	1000	*1	16.8	525	53.5	9810	1000	*1	1H -		6120DB	- 104	B-108	B-124	B-143
	678	69.1	9810	1000	0.93		562	57.3	9810	1000	1.12	1H -		6125DB	- 104	B-108	B-124	B-143
			14700	1500	1.15				14700	1500	1.39	1H -		6130DB	- 104	B-109	B-125	B-144
			14700	1500	1.39				14700	1500	1.45	1H -		6135DB	- 104	B-109	B-125	B-144
			16000	1630	1.45				16000	1630	1.45	1H -		6140DB	- 104	B-109	B-125	B-144
			16000	1630	1.81				16000	1630	2.18	1H -		6140DC	- 104	B-109	B-125	B-144
			16000	1630	2.02				16000	1630	2.44	1H -		6145DC	- 104	B-109	B-125	B-144
			22100	2250	2.59				22100	2250	3.05	1H -		6160DB	- 104	B-110	B-126	B-145
			22100	2250	2.59				22100	2250	3.12	1H -		6160DC	- 104	B-111	B-127	B-146
12.0	525	53.5	9810	1000	*1	14.5	525	53.5	9810	1000	*1	1H -		6120DB	- 121	B-108	B-124	B-143
	622	63.4	9810	1000	*1		622	63.4	9810	1000	*1	1H -		6125DB	- 121	B-108	B-124	B-143
	789	80.4	14700	1500	1.19		654	66.6	14700	1500	1.44	1H -		6135DB	- 121	B-109	B-125	B-144
			16000	1630	1.45				16000	1630	1.45	1H -		6140DB	- 121	B-109	B-125	B-144
			16000	1630	1.55				16000	1630	1.87	1H -		6140DC	- 121	B-109	B-125	B-144
			16000	1630	1.64				16000	1630	1.98	1H -		6145DC	- 121	B-109	B-125	B-144
			22100	2250	2.22				22100	2250	2.68	1H -		6160DB	- 121	B-110	B-126	B-145
			22100	2250	2.66				22100	2250	3.05	1H -		6165DB	- 121	B-110	B-126	B-145
			22100	2250	2.66				22100	2250	3.21	1H -		6165DC	- 121	B-111	B-127	B-146
10.1	630	64.2	9810	1000	*1	12.2	630	64.2	9810	1000	*1	1H -		6125DB	- 143	B-108	B-124	B-143
	932	95.0	**14700**	**1500**	**1.01**		773	78.8	**14700**	**1500**	**1.22**	**1H -**		**6135DB**	**- 143**	**B-109**	**B-125**	**B-144**
			16000	1630	1.31				16000	1630	1.45	1H -		6140DB	- 143	B-109	B-125	B-144
			16000	1630	1.31				16000	1630	1.59	1H -		6140DC	- 143	B-109	B-125	B-144
			16000	1630	1.45				16000	1630	1.45	1H -		6145DB	- 143	B-109	B-125	B-144
			16000	1630	1.47				16000	1630	1.77	1H -		6145DC	- 143	B-109	B-125	B-144
			22100	2250	1.88				22100	2250	2.27	1H -		6160DB	- 143	B-110	B-126	B-145
			22100	2250	2.25				22100	2250	2.72	1H -		6165DB	- 143	B-110	B-126	B-145
			29500	3010	2.71				29500	3010	3.05	1H -		6170DB	- 143	B-110	B-126	B-145
			29500	3010	2.71				29500	3010	3.27	1H -		6170DC	- 143	B-111	B-127	B-146
8.79	630	64.2	9810	1000	*1	10.6	630	64.2	9810	1000	*1	1H -		6125DB	- 165	B-108	B-124	B-143
	780	79.5	14700	1500	*1		780	79.5	14700	1500	*1	1H -		6130DB	- 165	B-109	B-125	B-144
	1080	110	14700	1500	0.87		891	90.9	14700	1500	1.05	1H -		6135DB	- 165	B-109	B-125	B-144
			16000	1630	1.14				16000	1630	1.37	1H -		6140DB	- 165	B-109	B-125	B-144
			16000	1630	1.26				16000	1630	1.45	1H -		6145DB	- 165	B-109	B-125	B-144
			16000	1630	1.26				16000	1630	1.52	1H -		6145DC	- 165	B-109	B-125	B-144
			22100	2250	1.45				22100	2250	1.45	1H -		6160DA	- 165	B-110	B-126	B-145
			22100	2250	1.63				22100	2250	1.97	1H -		6160DB	- 165	B-110	B-126	B-145
			22100	2250	1.95				22100	2250	2.36	1H -		6165DB	- 165	B-110	B-126	B-145
			29500	3010	2.35				29500	3010	2.84	1H -		6170DB	- 165	B-110	B-126	B-145
			29500	3010	2.93				29500	3010	3.05	1H -		6175DB	- 165	B-110	B-126	B-145
			29500	3010	2.93				29500	3010	3.53	1H -		6175DC	- 165	B-111	B-127	B-146

1. Combinations in **bold** are the recommended models for operations for 10 hours/day with uniform load (service factor is about 1.0 for motor rating at 50Hz).
2. Motor slippage may affect n_1 and n_2. Refer to technical data for details.
3. CNHM, CHHM, CNFM, CHFM, CNVM, and CVVM indicate types. Refer to page B-10 for details.
4. Lubrication method is different for each model. Refer to "Lubrication" section in page F-4~F-5 for details.
5. "6" at the end of "input capacity symbol" indicates models with 6P motor. Other models come with 4P motor.

Selection Tables Gearmotors

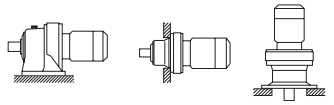

CHHM/CNHM CHFM/CNFM CVVM/CNVM

n_1: Motor Speed

1.1 kW	Hz	50Hz		60Hz	
	P	4	6	4	6
	n_1 r/min	1450	980	1750	1165

50Hz						60Hz						Nomenclature				Page of Dimension Sheet		
Output Speed n_2 [r/min]	Output Torque Tout [N·m]	[kgf·m]	Allowable Radial Load Pro [N]	[kgf]	SF	Output Speed n_2 [r/min]	Output Torque Tout [N·m]	[kgf·m]	Allowable Radial Load Pro [N]	[kgf]	SF	Input Capacity Symbol	- Frame Size	- Reduction Ratio		CNHM CHHM	CNFM CHFM	CNVM CVVM
	780	79.5	14700	1500	*1		780	79.5	14700	1500	*1	1H -	6130DB	- 195		B-109	B-125	B-144
	940	95.8	14700	1500	*1		940	95.8	14700	1500	*1	1H -	6135DB	- 195		B-109	B-125	B-144
			16000	**1630**	**1.07**				**16000**	**1630**	**1.29**	**1H -**	**6145DB**	**- 195**		**B-109**	**B-125**	**B-144**
			22100	2250	1.38				22100	2250	1.45	1H -	6160DA	- 195		B-110	B-126	B-145
7.44			22100	2250	1.38	8.97			22100	2250	1.67	1H -	6160DB	- 195		B-110	B-126	B-145
	1270	130	22100	2250	1.45		1050	107	22100	2250	1.45	1H -	6165DA	- 195		B-110	B-126	B-145
			22100	2250	1.65				22100	2250	1.99	1H -	6165DB	- 195		B-110	B-126	B-145
			29500	3010	1.99				29500	3010	2.40	1H -	6170DB	- 195		B-110	B-126	B-145
			29500	3010	2.48				29500	3010	2.99	1H -	6175DB	- 195		B-110	B-126	B-145
	940	95.8	14700	1500	*1		940	95.8	14700	1500	*1	1H -	6135DB	- 231		B-109	B-125	B-144
	1230	125	16000	1630	*1		1230	125	16000	1630	*1	1H -	6140DB	- 231		B-109	B-125	B-144
			15500	1580	0.89				16000	1630	1.07	1H -	6145DB	- 231		B-109	B-125	B-144
			22100	2250	1.17				22100	2250	1.41	1H -	6160DA	- 231		B-110	B-126	B-145
			22100	2250	1.39				22100	2250	1.45	1H -	6165DA	- 231		B-110	B-126	B-145
6.28			22100	2250	1.39	7.58			22100	2250	1.68	1H -	6165DB	- 231		B-110	B-126	B-145
	1510	154	29500	3010	1.45		1250	127	29500	3010	1.45	1H -	6170DA	- 231		B-110	B-126	B-145
			29500	3010	1.68				29500	3010	2.03	1H -	6170DB	- 231		B-110	B-126	B-145
			29500	3010	2.09				29500	3010	2.52	1H -	6175DB	- 231		B-110	B-126	B-145
			41700	4250	2.69				41700	4250	3.05	1H -	6180DA	- 231		B-110	B-126	B-145
			41700	4250	2.69				41700	4250	3.25	1H -	6180DB	- 231		B-111	B-127	B-146
	1230	125	16000	1630	*1		1230	125	16000	1630	*1	1H -	6140DB	- 273		B-109	B-125	B-144
	1340	136	16000	1630	*1		1340	136	16000	1630	*1	1H -	6145DB	- 273		B-109	B-125	B-144
			22100	2250	1.18				22100	2250	1.42	1H -	6165DA	- 273		B-110	B-126	B-145
			29500	3010	1.42				29500	3010	1.45	1H -	6170DA	- 273		B-110	B-126	B-145
			29500	3010	1.42				29500	3010	1.72	1H -	6170DB	- 273		B-110	B-126	B-145
5.31	1780	181	29500	3010	1.45	6.41	1470	150	29500	3010	1.45	1H -	6175DA	- 273		B-110	B-126	B-145
			29500	3010	1.77				29500	3010	2.14	1H -	6175DB	- 273		B-110	B-126	B-145
			41700	4250	2.28				41700	4250	2.75	1H -	6180DA	- 273		B-110	B-126	B-145
			41700	4250	2.81				41700	4250	3.05	1H -	6185DA	- 273		B-110	B-126	B-145
			41700	4250	2.81				41700	4250	3.39	1H -	6185DB	- 273		B-111	B-127	B-146
	1230	125	16000	1630	*1		1230	125	16000	1630	*1	1H -	6140DB	- 319		B-109	B-125	B-144
	1370	140	15800	1610	*1		1370	140	15800	1610	*1	1H -	6145DB	- 319		B-109	B-125	B-144
			22100	**2250**	**1.01**				**22100**	**2250**	**1.22**	**1H -**	**6165DA**	**- 319**		**B-110**	**B-126**	**B-145**
			29500	3010	1.22				29500	3010	1.45	1H -	6170DA	- 319		B-110	B-126	B-145
4.55			29500	3010	1.22	5.49			29500	3010	1.47	1H -	6170DB	- 319		B-110	B-126	B-145
	2080	212	29500	3010	1.45		1720	176	29500	3010	1.45	1H -	6175DA	- 319		B-110	B-126	B-145
			29500	3010	1.51				29500	3010	1.83	1H -	6175DB	- 319		B-110	B-126	B-145
			41700	4250	1.95				41700	4250	2.35	1H -	6180DA	- 319		B-110	B-126	B-145
			41700	4250	2.40				41700	4250	2.90	1H -	6185DA	- 319		B-110	B-126	B-145
	1760	179	22100	2250	*1		1760	179	22100	2250	*1	1H -	6160DA	- 377		B-110	B-126	B-145
			22100	2250	0.85				22100	2250	1.03	1H -	6165DA	- 377		B-110	B-126	B-145
			29500	**3010**	**1.03**				**29500**	**3010**	**1.24**	**1H -**	**6170DA**	**- 377**		**B-110**	**B-126**	**B-145**
			29500	3010	1.28				29500	3010	1.45	1H -	6175DA	- 377		B-110	B-126	B-145
3.85	2460	251	29500	3010	1.28	4.64	2040	208	29500	3010	1.55	1H -	6175DB	- 377		B-110	B-126	B-145
			41700	4250	1.65				41700	4250	1.99	1H -	6180DA	- 377		B-110	B-126	B-145
			41700	4250	2.03				41700	4250	2.45	1H -	6185DA	- 377		B-110	B-126	B-145
			59000	6010	2.60				59000	6010	3.13	1H -	6190DA	- 377		B-111	B-128	B-147

6. "*2" indicate models manufactured with reducer and motor separately mounted on a common baseplate (horizontal shaft direction) or on an adaptor (vertical shaft direction). Consult us for details, including dimensions.
7. Allowable radial load (Pro) is the value at the midpoint of the slow speed shaft.
8. "*3" indicate models with reduction ratios equal to nominal ratio. Refer to Table A-3 "6000SK Series (Actual Reduction Ratio)" on page A-4 for actual reduction ratio. Indicated reduction ratio is the same as actual reduction ratio for other models.
9. Maintain torque load during operation within "Output torque" in the table for models with "*1" in the SF column. They cannot be operated with 100% motor rating.

Selection Tables Gearmotors

n_1: Motor Speed

1.1 kW	Hz		50Hz		60Hz	
	P		4	6	4	6
	n_1	r/min	1450	980	1750	1165

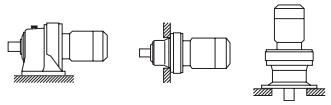

CHHM/CNHM CHFM/CNFM CVVM/CNVM

50Hz						60Hz						Nomenclature				Page of Dimension Sheet		
Output Speed n_2 [r/min]	Output Torque Tout [N·m]	[kgf·m]	Allowable Radial Load Pro [N]	[kgf]	SF	Output Speed n_2 [r/min]	Output Torque Tout [N·m]	[kgf·m]	Allowable Radial Load Pro [N]	[kgf]	SF	Input Capacity Symbol	-	Frame Size	- Reduction Ratio	CNHM CHHM	CNFM CHFM	CNVM CVVM
	2100	214	22100	2250	*1		2100	214	22100	2250	*1	1H -		6165DA	- 473	B-110	B-126	B-145
	2530	258	29500	3010	*1		2530	258	29500	3010	*1	1H -		6170DA	- 473	B-110	B-126	B-145
			29500	**3010**	**1.02**				**29500**	**3010**	**1.23**	**1H -**		**6175DA**	**- 473**	**B-110**	**B-126**	**B-145**
3.07			41700	4250	1.32	3.70			41700	4250	1.59	1H -		6180DA	- 473	B-110	B-126	B-145
	3080	314	41700	4250	1.62		2560	260	41700	4250	1.96	1H -		6185DA	- 473	B-110	B-126	B-145
			59000	6010	2.07				59000	6010	2.50	1H -		6190DA	- 473	B-111	B-128	B-147
			59000	6010	2.58				59000	6010	3.11	1H -		6195DA	- 473	B-111	B-128	B-147
	2100	214	22100	2250	*1		2100	214	22100	2250	*1	1H -		6165DA	- 559	B-110	B-126	B-145
	2530	258	29500	3010	*1		2530	258	29500	3010	*1	1H -		6170DA	- 559	B-110	B-126	B-145
			29500	3010	0.86				29500	3010	1.04	1H -		6175DA	- 559	B-110	B-126	B-145
2.59			41700	4250	1.11	3.13			41700	4250	1.34	1H -		6180DA	- 559	B-110	B-126	B-145
	3640	372	41700	4250	1.37		3020	308	41700	4250	1.66	1H -		6185DA	- 559	B-110	B-126	B-145
			59000	6010	1.75				59000	6010	2.11	1H -		6190DA	- 559	B-111	B-128	B-147
			59000	6010	2.18				59000	6010	2.64	1H -		6195DA	- 559	B-111	B-128	B-147
	2530	258	29500	3010	*1		2530	258	29500	3010	*1	1H -		6170DA	- 649	B-110	B-126	B-145
	3150	321	29500	3010	*1		3150	321	29500	3010	*1	1H -		6175DA	- 649	B-110	B-126	B-145
2.23			41700	4250	1.18	2.70			41700	4250	1.43	1H -		6185DA	- 649	B-110	B-126	B-145
	4230	431	59000	6010	1.51		3510	357	59000	6010	1.82	1H -		6190DA	- 649	B-111	B-128	B-147
			59000	6010	1.88				59000	6010	2.27	1H -		6195DA	- 649	B-111	B-128	B-147
	3150	321	29500	3010	*1		3150	321	29500	3010	*1	1H -		6175DA	- 731	B-110	B-126	B-145
1.98			**41700**	**4250**	**1.05**	2.39			**41700**	**4250**	**1.27**	**1H -**		**6185DA**	**- 731**	**B-110**	**B-126**	**B-145**
	4770	486	59000	6010	1.34		3950	403	59000	6010	1.62	1H -		6190DA	- 731	B-111	B-128	B-147
			59000	6010	1.67				59000	6010	2.02	1H -		6195DA	- 731	B-111	B-128	B-147
	3150	321	29500	3010	*1		3150	321	29500	3010	*1	1H -		6175DA	- 841	B-110	B-126	B-145
	4050	413	41700	4250	*1		4050	413	41700	4250	*1	1H -		6180DA	- 841	B-110	B-126	B-145
1.72			41700	4250	0.91	2.08			41700	4250	1.10	1H -		6185DA	- 841	B-110	B-126	B-145
	5480	559	59000	6010	1.16		4540	463	59000	6010	1.40	1H -		6190DA	- 841	B-111	B-128	B-147
			59000	6010	1.45				59000	6010	1.75	1H -		6195DA	- 841	B-111	B-128	B-147
	4050	413	41700	4250	*1		4050	413	41700	4250	*1	1H -		6180DA	- 1003	B-110	B-126	B-145
1.45	5000	510	41600	4240	*1	1.74	5000	510	41600	4240	*1	1H -		6185DA	- 1003	B-110	B-126	B-145
	6540	667	58500	5970	1.22		5420	552	58800	6000	1.47	1H -		6195DA	- 1003	B-111	B-128	B-147
	5000	510	41700	4250	*1		5000	510	41700	4250	*1	1H -		6185DA	- 1247	B-110	B-126	B-145
1.16	6380	650	59000	6010	*1	1.40	6380	650	59000	6010	*1	1H -		6190DA	- 1247	B-111	B-128	B-147
	8130	829	58900	6010	0.98		6740	687	59000	6010	1.18	1H -		6195DA	- 1247	B-111	B-128	B-147
	6380	650	58900	6000	*1		6380	650	58900	6000	*1	1H -		6190DA	- 1479	B-111	B-128	B-147
0.980	7960	811	58400	5950	*1	1.18	7960	811	58400	5950	*1	1H -		6195DA	- 1479	B-111	B-128	B-147
	9640	983	57800	5900	0.83		7990	815	58400	5950	1.00	1H -		6195DA	- 1479	B-111	B-128	B-147
0.784	7960	811	59000	6010	*1	0.946	7960	811	59000	6010	*1	1H -		6195DA	- 1849	B-111	B-128	B-147
0.702	7960	811	58100	5930	*1	0.847	7960	811	58100	5930	*1	1H -		6195DA	- 2065	B-111	B-128	B-147

1. Combinations in **bold** are the recommended models for operations for 10 hours/day with uniform load (service factor is about 1.0 for motor rating at 50Hz).
2. Motor slippage may affect n_1 and n_2. Refer to technical data for details.
3. CNHM, CHHM, CNFM, CHFM, CNVM, and CVVM indicate types. Refer to page B-10 for details.
4. Lubrication method is different for each model. Refer to "Lubrication" section in page F-4~F-5 for details.
5. "6" at the end of "input capacity symbol" indicates models with 6P motor. Other models come with 4P motor.

Selection Tables Gearmotors

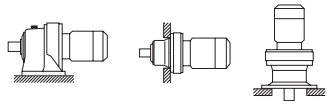

CHHM/CNHM CHFM/CNFM CVVM/CNVM

n1: Motor Speed

1.5 kW	Hz	50Hz		60Hz	
	P	4	6	4	6
	n1 r/min	1450	980	1750	1165

50Hz						60Hz						Nomenclature					Page of Dimension Sheet		
Output Speed n2 [r/min]	Output Torque Tout [N·m]	[kgf·m]	Allowable Radial Load Pro [N]	[kgf]	SF	Output Speed n2 [r/min]	Output Torque Tout [N·m]	[kgf·m]	Allowable Radial Load Pro [N]	[kgf]	SF	Input Capacity Symbol	-	Frame Size	-	Reduction Ratio	CNHM CHHM	CNFM CHFM	CNVM CVVM
			1130	**115**	**1.10**				**1090**	**111**	**1.10**	**2**	**-**	**6080SK**	**-**	**2.5 *3**	**B-98**	**-**	**B-133**
			1130	115	1.37				1090	111	1.37	2	-	6085SK	-	2.5 *3	B-98	-	B-133
			2140	218	1.60				2050	209	1.60	2	-	6090SK	-	2.5 *3	B-98	-	B-133
580	23.5	2.39	2140	218	1.81	700	19.4	1.98	2050	209	1.81	2	-	6095SK	-	2.5 *3	B-98	-	B-133
			2140	218	2.12				2050	209	2.12	2	-	6100SK	-	2.5 *3	B-99	-	B-134
			2140	218	2.50				2050	209	2.50	2	-	6105SK	-	2.5 *3	B-99	-	B-134
			2860	292	3.43				2710	276	3.43	2	-	6110SK	-	2.5 *3	B-99	-	B-134
			1170	**119**	**1.10**				**1130**	**115**	**1.10**	**2**	**-**	**6080SK**	**-**	**3 *3**	**B-98**	**-**	**B-133**
			1170	119	1.37				1130	115	1.37	2	-	6085SK	-	3 *3	B-98	-	B-133
			2230	227	1.56				2120	216	1.56	2	-	6090SK	-	3 *3	B-98	-	B-133
483	28.2	2.87	2230	227	1.75	583	23.3	2.38	2120	216	1.75	2	-	6095SK	-	3 *3	B-98	-	B-133
			2230	227	2.20				2120	216	2.20	2	-	6100SK	-	3 *3	B-99	-	B-134
			2230	227	2.59				2120	216	2.59	2	-	6105SK	-	3 *3	B-99	-	B-134
			3060	312	3.52				2890	295	3.52	2	-	6110SK	-	3 *3	B-99	-	B-134
			1250	**127**	**1.10**				**1210**	**123**	**1.10**	**2**	**-**	**6080SK**	**-**	**4 *3**	**B-98**	**-**	**B-133**
			1250	127	1.37				1210	123	1.37	2	-	6085SK	-	4 *3	B-98	-	B-133
			2470	252	1.56				2370	242	1.56	2	-	6090SK	-	4 *3	B-98	-	B-133
363	37.5	3.83	2470	252	1.75	438	31.1	3.17	2370	242	1.75	2	-	6095SK	-	4 *3	B-98	-	B-133
			2470	252	2.15				2370	242	2.15	2	-	6100SK	-	4 *3	B-99	-	B-134
			2470	252	2.53				2370	242	2.53	2	-	6105SK	-	4 *3	B-99	-	B-134
			3280	334	3.57				3100	316	3.57	2	-	6110SK	-	4 *3	B-99	-	B-134
			1290	**132**	**1.21**				**1270**	**129**	**1.21**	**2**	**-**	**6085SK**	**-**	**5 *3**	**B-98**	**-**	**B-133**
			2590	264	1.49				2490	254	1.49	2	-	6090SK	-	5 *3	B-98	-	B-133
290	46.9	4.78	2590	264	1.75	350	38.9	3.96	2490	254	1.75	2	-	6095SK	-	5 *3	B-98	-	B-133
			2590	264	2.10				2490	254	2.10	2	-	6100SK	-	5 *3	B-99	-	B-134
			2590	264	2.47				2490	254	2.47	2	-	6105SK	-	5 *3	B-99	-	B-134
			3460	353	3.07				3290	335	3.07	2	-	6110SK	-	5 *3	B-99	-	B-134
			1290	**132**	**1.08**				**1290**	**131**	**1.08**	**2**	**-**	**6085SK**	**-**	**6 *3**	**B-98**	**-**	**B-133**
			2660	271	1.27				2530	258	1.27	2	-	6090SK	-	6 *3	B-98	-	B-133
			2660	271	1.51				2530	258	1.51	2	-	6095SK	-	6 *3	B-98	-	B-133
			2660	271	1.78				2530	258	1.78	2	-	6100SK	-	6 *3	B-99	-	B-134
			2660	271	2.09				2530	258	2.09	2	-	6105SK	-	6 *3	B-99	-	B-134
242	56.3	5.74	3700	377	2.82	292	46.7	4.76	3510	358	2.82	2	-	6110SK	-	6 *3	B-99	-	B-134
			2790	284	1.01				2630	268	1.01	2	-	6095	-	6	B-100	B-116	B-135
			4130	421	1.57				3880	396	1.57	2	-	6100	-	6	B-101	B-117	B-136
			4130	421	2.12				3880	396	2.12	2	-	6105	-	6	B-101	B-117	B-136
			4670	476	2.37				4390	447	2.37	2	-	6110	-	6	B-101	B-117	B-136
			4670	476	2.61				4390	447	2.61	2	-	6115	-	6	B-101	B-117	B-136
			1290	132	0.91				1290	132	0.91	2	-	6085SK	-	8 *3	B-98	-	B-133
			2870	**293**	**1.00**				**2780**	**283**	**1.00**	**2**	**-**	**6090SK**	**-**	**8 *3**	**B-98**	**-**	**B-133**
			2870	293	1.18				2780	283	1.18	2	-	6095SK	-	8 *3	B-98	-	B-133
			2870	293	1.41				2780	283	1.41	2	-	6100SK	-	8 *3	B-99	-	B-134
			2870	293	1.66				2780	283	1.66	2	-	6105SK	-	8 *3	B-99	-	B-134
181	75.1	7.65	3950	403	2.47	219	62.2	6.34	3770	384	2.47	2	-	6110SK	-	8 *3	B-99	-	B-134
			3950	403	3.09				3770	384	3.09	2	-	6115SK	-	8 *3	B-99	-	B-134
			3090	315	1.01				2920	297	1.01	2	-	6095	-	8	B-100	B-116	B-135
			4600	469	1.57				4330	441	1.57	2	-	6100	-	8	B-101	B-117	B-136
			4600	469	2.12				4330	441	2.12	2	-	6105	-	8	B-101	B-117	B-136
			5210	531	2.37				4900	499	2.37	2	-	6110	-	8	B-101	B-117	B-136
			5210	531	2.61				4900	499	2.61	2	-	6115	-	8	B-101	B-117	B-136
			2990	**305**	**1.18**				**2900**	**296**	**1.18**	**2**	**-**	**6095SK**	**-**	**10 *3**	**B-98**	**-**	**B-133**
			2990	305	1.32				2900	296	1.32	2	-	6100SK	-	10 *3	B-99	-	B-134
145	93.9	9.57	2990	305	1.47	175	77.8	7.93	2900	296	1.47	2	-	6105SK	-	10 *3	B-99	-	B-134
			4250	433	2.04				4050	413	2.04	2	-	6110SK	-	10 *3	B-99	-	B-134
			4250	433	2.55				4050	413	2.55	2	-	6115SK	-	10 *3	B-99	-	B-134

6. "*2" indicate models manufactured with reducer and motor separately mounted on a common baseplate (horizontal shaft direction) or on an adaptor (vertical shaft direction). Consult us for details, including dimensions.
7. Allowable radial load (Pro) is the value at the midpoint of the slow speed shaft.
8. "*3" indicate models with reduction ratios equal to nominal ratio. Refer to Table A-3 "6000SK Series (Actual Reduction Ratio)" on page A-4 for actual reduction ratio. Indicated reduction ratio is the same as actual reduction ratio for other models.
9. Maintain torque load during operation within "Output torque" in the table for models with "*1" in the SF column. They cannot be operated with 100% motor rating.

Selection Tables Gearmotors

n_1: Motor Speed

1.5 kW	Hz		50Hz		60Hz	
	P		4	6	4	6
	n_1	r/min	1450	980	1750	1165

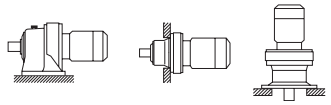

CHHM/CNHM CHFM/CNFM CVVM/CNVM

50Hz						60Hz						Nomenclature				Page of Dimension Sheet		
Output Speed n_2 [r/min]	Output Torque Tout [N·m]	[kgf·m]	Allowable Radial Load Pro [N]	[kgf]	SF	Output Speed n_2 [r/min]	Output Torque Tout [N·m]	[kgf·m]	Allowable Radial Load Pro [N]	[kgf]	SF	Input Capacity Symbol	-	Frame Size	- Reduction Ratio	CNHM CHHM	CNFM CHFM	CNVM CVVM
			3340	**340**	**1.01**				**3300**	**336**	**1.01**	**2**	**-**	**6095**	**- 11**	**B-100**	**B-116**	**B-135**
			5220	532	1.57				4920	501	1.57	2	-	6100	- 11	B-101	B-117	B-136
132	103	10.5	5220	532	2.12	159	85.5	8.72	4920	501	2.12	2	-	6105	- 11	B-101	B-117	B-136
			5950	606	2.37				5600	571	2.37	2	-	6110	- 11	B-101	B-117	B-136
			5950	606	2.61				5600	571	2.61	2	-	6115	- 11	B-101	B-117	B-136
			3340	**340**	**1.01**				**3300**	**336**	**1.01**	**2**	**-**	**6095**	**- 13**	**B-100**	**B-116**	**B-135**
			5400	550	1.57				5110	521	1.57	2	-	6100	- 13	B-101	B-117	B-136
112	122	12.4	5400	550	2.12	135	101	10.3	5110	521	2.12	2	-	6105	- 13	B-101	B-117	B-136
			6150	627	2.37				5790	591	2.37	2	-	6110	- 13	B-101	B-117	B-136
			6150	627	2.60				5790	591	2.60	2	-	6115	- 13	B-101	B-117	B-136
			3340	**340**	**1.01**				**3280**	**335**	**1.01**	**2**	**-**	**6095**	**- 15**	**B-100**	**B-116**	**B-135**
			5400	550	1.57				5400	550	1.57	2	-	6100	- 15	B-101	B-117	B-136
96.7	141	14.4	5400	550	2.12	117	117	11.9	5400	550	2.12	2	-	6105	- 15	B-101	B-117	B-136
			6560	669	2.37				6180	630	2.37	2	-	6110	- 15	B-101	B-117	B-136
			6560	669	2.60				6180	630	2.60	2	-	6115	- 15	B-101	B-117	B-136
			3340	**340**	**1.01**				**3290**	**336**	**1.01**	**2**	**-**	**6095**	**- 17**	**B-100**	**B-116**	**B-135**
			5400	550	1.33				5400	550	1.33	2	-	6100	- 17	B-101	B-117	B-136
85.3	160	16.3	5400	550	1.64	103	132	13.5	5400	550	1.64	2	-	6105	- 17	B-101	B-117	B-136
			6620	675	2.12				6240	636	2.12	2	-	6110	- 17	B-101	B-117	B-136
			6620	675	2.60				6240	636	2.60	2	-	6115	- 17	B-101	B-117	B-136
			3340	**340**	**1.01**				**3260**	**332**	**1.01**	**2**	**-**	**6095**	**- 21**	**B-100**	**B-116**	**B-135**
			5400	550	1.27				5400	550	1.29	2	-	6100	- 21	B-101	B-117	B-136
69.0	197	20.1	5400	550	1.52	83.3	163	16.6	5400	550	1.56	2	-	6105	- 21	B-101	B-117	B-136
			7020	716	1.81				6620	675	1.81	2	-	6110	- 21	B-101	B-117	B-136
			7020	716	2.07				6620	675	2.07	2	-	6115	- 21	B-101	B-117	B-136
			8260	842	2.64				7780	793	2.64	2	-	6120	- 21	B-101	B-117	B-136
			5400	**550**	**1.11**				**5400**	**550**	**1.11**	**2**	**-**	**6105**	**- 25**	**B-101**	**B-117**	**B-136**
			7120	726	1.27				6720	685	1.27	2	-	6110	- 25	B-101	B-117	B-136
58.0	235	23.9	7120	726	1.48	70.0	194	19.8	6720	685	1.48	2	-	6115	- 25	B-101	B-117	B-136
			8650	882	2.06				8150	831	2.06	2	-	6120	- 25	B-101	B-117	B-136
			8650	882	2.64				8150	831	2.64	2	-	6125	- 25	B-101	B-117	B-136
			5400	**550**	**1.06**				**5400**	**550**	**1.06**	**2**	**-**	**6105**	**- 29**	**B-101**	**B-117**	**B-136**
			7290	743	1.27				6900	703	1.27	2	-	6110	- 29	B-101	B-117	B-136
50.0	272	27.7	7290	743	1.48	60.3	226	23.0	6900	703	1.48	2	-	6115	- 29	B-101	B-117	B-136
			8990	916	1.91				8470	863	1.99	2	-	6120	- 29	B-101	B-117	B-136
			8990	916	2.31				8470	863	2.51	2	-	6125	- 29	B-101	B-117	B-136
			10500	1070	2.87				9920	1010	2.99	2	-	6130	- 29	B-102	B-118	B-137
			4820	491	0.80				5330	544	0.80	2	-	6105	- 35	B-101	B-117	B-136
			7310	**745**	**1.00**				**7360**	**751**	**1.00**	**2**	**-**	**6110**	**- 35**	**B-101**	**B-117**	**B-136**
			7310	745	1.21				7360	751	1.21	2	-	6115	- 35	B-101	B-117	B-136
41.4	328	33.5	9490	967	1.58	50.0	272	27.7	8940	912	1.66	2	-	6120	- 35	B-101	B-117	B-136
			9490	967	1.92				8940	912	2.12	2	-	6125	- 35	B-101	B-117	B-136
			11100	1130	2.37				10400	1060	2.47	2	-	6130	- 35	B-102	B-118	B-137
			11100	1130	2.74				10400	1060	2.83	2	-	6135	- 35	B-102	B-118	B-137
			7540	**769**	**1.01**				**7610**	**776**	**1.01**	**2**	**-**	**6115**	**- 43**	**B-101**	**B-117**	**B-136**
			9810	1000	1.27				9510	969	1.27	2	-	6120	- 43	B-101	B-117	B-136
33.7	404	41.1	9810	1000	1.56	40.7	334	34.1	9510	969	1.59	2	-	6125	- 43	B-101	B-117	B-136
			11900	1210	1.93				11200	1140	1.99	2	-	6130	- 43	B-102	B-118	B-137
			11900	1210	2.23				11200	1140	2.51	2	-	6135	- 43	B-102	B-118	B-137
			16000	1630	2.63				15900	1620	2.63	2	-	6140	- 43	B-102	B-118	B-137
			9810	**1000**	**1.09**				**9810**	**1000**	**1.15**	**2**	**-**	**6120**	**- 51**	**B-101**	**B-117**	**B-136**
			9810	1000	1.31				9810	1000	1.52	2	-	6125	- 51	B-101	B-117	B-136
28.4	479	48.8	12400	1260	1.63	34.3	397	40.4	11700	1190	1.69	2	-	6130	- 51	B-102	B-118	B-137
			12400	1260	1.70				11700	1190	1.95	2	-	6135	- 51	B-102	B-118	B-137
			16000	1630	2.29				16000	1630	2.29	2	-	6140	- 51	B-102	B-118	B-137
			16000	1630	2.47				16000	1630	2.81	2	-	6145	- 51	B-102	B-118	B-137

1. Combinations in **bold** are the recommended models for operations for 10 hours/day with uniform load (service factor is about 1.0 for motor rating at 50Hz).
2. Motor slippage may affect n_1 and n_2. Refer to technical data for details.
3. CNHM, CHHM, CNFM, CHFM, CNVM, and CVVM indicate types. Refer to page B-10 for details.
4. Lubrication method is different for each model. Refer to "Lubrication" section in page F-4~F-5 for details.
5. "6" at the end of "input capacity symbol" indicates models with 6P motor. Other models come with 4P motor.

Selection Tables Gearmotors

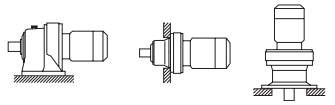

CHHM/CNHM CHFM/CNFM CVVM/CNVM

1.5 kW

n_1: Motor Speed

Hz	50Hz		60Hz	
P	4	6	4	6
n_1 r/min	1450	980	1750	1165

50Hz						60Hz						Nomenclature				Page of Dimension Sheet		
Output Speed n_2 [r/min]	Output Torque Tout [N·m]	[kgf·m]	Allowable Radial Load Pro [N]	[kgf]	SF	Output Speed n_2 [r/min]	Output Torque Tout [N·m]	[kgf·m]	Allowable Radial Load Pro [N]	[kgf]	SF	Input Capacity Symbol	- Frame Size	- Reduction Ratio		CNHM CHHM	CNFM CHFM	CNVM CVVM
			9810	**1000**	**1.08**				**9810**	**1000**	**1.08**	**2**	**-** **6125**	**-** **59**		**B-101**	**B-117**	**B-136**
			13000	1320	1.41				12200	1250	1.46	2	- 6130	- 59		B-102	B-118	B-137
			13000	1320	1.63				12200	1250	1.68	2	- 6135	- 59		B-102	B-118	B-137
24.6	554	56.4	16000	1630	1.97	29.7	459	46.8	16000	1630	1.97	2	- 6140	- 59		B-102	B-118	B-137
			16000	1630	2.12				16000	1630	2.43	2	- 6145	- 59		B-102	B-118	B-137
			22100	2250	2.95				22100	2250	2.95	2	- 6160	- 59		B-103	B-119	B-138
			13700	**1400**	**1.17**				**12900**	**1320**	**1.22**	**2**	**-** **6130**	**-** **71**		**B-102**	**B-118**	**B-137**
			13700	1400	1.35				12900	1320	1.45	2	- 6135	- 71		B-102	B-118	B-137
20.4	666	67.9	16000	1630	1.62	24.6	552	56.3	16000	1630	1.62	2	- 6140	- 71		B-102	B-118	B-137
			16000	1630	1.75				16000	1630	2.02	2	- 6145	- 71		B-102	B-118	B-137
			22100	2250	2.31				22100	2250	2.31	2	- 6160	- 71		B-103	B-119	B-138
			14700	**1500**	**1.10**				**13900**	**1420**	**1.27**	**2**	**-** **6135**	**-** **87**		**B-102**	**B-118**	**B-137**
			16000	1630	1.32				16000	1630	1.32	2	- 6140	- 87		B-102	B-118	B-137
16.7	817	83.2	16000	1630	1.44	20.1	677	69.0	16000	1630	1.65	2	- 6145	- 87		B-102	B-118	B-137
			22100	2250	2.15				22100	2250	2.31	2	- 6160	- 87		B-103	B-119	B-138
			22100	2250	2.51				22100	2250	2.60	2	- 6165	- 87		B-103	B-119	B-138
	630	64.2	9810	1000	*1		630	64.2	9810	1000	*1	2	- 6125DB	- 104		B-108	B-124	B-143
			14700	**1500**	**1.02**				**14700**	**1500**	**1.07**	**2**	**-** **6135DB**	**-** **104**		**B-109**	**B-125**	**B-144**
			14700	1500	1.02				14700	1500	1.23	2	- 6135DC	- 104		B-109	B-125	B-144
			16000	1630	1.07				16000	1630	1.07	2	- 6140DB	- 104		B-109	B-125	B-144
			16000	1630	1.32				16000	1630	1.60	2	- 6140DC	- 104		B-109	B-125	B-144
13.9	925	94.3	16000	1630	1.48	16.8	766	78.1	16000	1630	1.79	2	- 6145DC	- 104		B-109	B-125	B-144
			22100	2250	1.90				22100	2250	2.24	2	- 6160DB	- 104		B-110	B-126	B-145
			22100	2250	1.90				22100	2250	2.29	2	- 6160DC	- 104		B-111	B-127	B-146
			22100	2250	2.24				22100	2250	2.24	2	- 6165DB	- 104		B-110	B-126	B-145
			22100	2250	2.27				22100	2250	2.74	2	- 6165DC	- 104		B-111	B-127	B-146
			29500	3010	2.73				29500	3010	3.30	2	- 6170DC	- 104		B-111	B-127	B-146
	780	79.5	14700	1500	*1		780	79.5	14700	1500	*1	2	- 6130DB	- 121		B-109	B-125	B-144
			14700	1500	0.87				14700	1500	1.05	2	- 6135DB	- 121		B-109	B-125	B-144
			16000	**1630**	**1.07**				**16000**	**1630**	**1.07**	**2**	**-** **6140DB**	**-** **121**		**B-109**	**B-125**	**B-144**
			16000	1630	1.14				16000	1630	1.37	2	- 6140DC	- 121		B-109	B-125	B-144
			16000	1630	1.20				16000	1630	1.45	2	- 6145DC	- 121		B-109	B-125	B-144
12.0	1080	110	22100	2250	1.63	14.5	891	90.9	22100	2250	1.97	2	- 6160DB	- 121		B-110	B-126	B-145
			22100	2250	1.95				22100	2250	2.24	2	- 6165DB	- 121		B-110	B-126	B-145
			22100	2250	1.95				22100	2250	2.36	2	- 6165DC	- 121		B-111	B-127	B-146
			29500	3010	2.24				29500	3010	2.24	2	- 6170DB	- 121		B-110	B-126	B-145
			29500	3010	2.35				29500	3010	2.84	2	- 6170DC	- 121		B-111	B-127	B-146
			29500	3010	2.93				29500	3010	3.53	2	- 6175DC	- 121		B-111	B-127	B-146
	780	79.5	14700	1500	*1		780	79.5	14700	1500	*1	2	- 6130DB	- 143		B-109	B-125	B-144
	940	95.8	14700	1500	*1		940	95.8	14700	1500	*1	2	- 6135DB	- 143		B-109	B-125	B-144
			16000	**1630**	**1.07**				**16000**	**1630**	**1.07**	**2**	**-** **6145DB**	**-** **143**		**B-109**	**B-125**	**B-144**
			16000	1630	1.08				16000	1630	1.30	2	- 6145DC	- 143		B-109	B-125	B-144
10.1			22100	2250	1.38	12.2			22100	2250	1.67	2	- 6160DB	- 143		B-110	B-126	B-145
	1270	130	22100	2250	1.65		1050	107	22100	2250	1.99	2	- 6165DB	- 143		B-110	B-126	B-145
			29500	3010	1.99				29500	3010	2.24	2	- 6170DB	- 143		B-110	B-126	B-145
			29500	3010	1.99				29500	3010	2.40	2	- 6170DC	- 143		B-111	B-127	B-146
			29500	3010	2.24				29500	3010	2.24	2	- 6175DB	- 143		B-110	B-126	B-145
			29500	3010	2.48				29500	3010	2.99	2	- 6175DC	- 143		B-111	B-127	B-146

6. "*2" indicate models manufactured with reducer and motor separately mounted on a common baseplate (horizontal shaft direction) or on an adaptor (vertical shaft direction). Consult us for details, including dimensions.
7. Allowable radial load (Pro) is the value at the midpoint of the slow speed shaft.
8. "*3" indicate models with reduction ratios equal to nominal ratio. Refer to Table A-3 "6000SK Series (Actual Reduction Ratio)" on page A-4 for actual reduction ratio. Indicated reduction ratio is the same as actual reduction ratio for other models.
9. Maintain torque load during operation within "Output torque" in the table for models with "*1" in the SF column. They cannot be operated with 100% motor rating.

Selection Tables Gearmotors

n_1: Motor Speed

1.5 kW	Hz		50Hz		60Hz	
	P		4	6	4	6
	n_1	r/min	1450	980	1750	1165

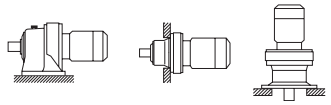

CHHM/CNHM CHFM/CNFM CVVM/CNVM

50Hz						60Hz						Nomenclature	Page of Dimension Sheet		
Output Speed n_2 [r/min]	Output Torque Tout [N·m]	[kgf·m]	Allowable Radial Load Pro [N]	[kgf]	SF	Output Speed n_2 [r/min]	Output Torque Tout [N·m]	[kgf·m]	Allowable Radial Load Pro [N]	[kgf]	SF	Input Capacity Symbol - Frame Size - Reduction Ratio	CNHM CHHM	CNFM CHFM	CNVM CVVM
8.79	940	95.8	14700	1500	*1	10.6	940	95.8	14700	1500	*1	2 - 6135DB - 165	B-109	B-125	B-144
	1470	150	15500	1580	0.93		1220	124	16000	1630	1.07	2 - 6145DB - 165	B-109	B-125	B-144
			15500	1580	0.93				16000	1630	1.12	2 - 6145DC - 165	B-109	B-125	B-144
			22100	**2250**	**1.07**				**22100**	**2250**	**1.07**	**2 - 6160DA - 165**	**B-110**	**B-126**	**B-145**
			22100	2250	1.20				22100	2250	1.44	2 - 6160DB - 165	B-110	B-126	B-145
			22100	2250	1.43				22100	2250	1.73	2 - 6165DB - 165	B-110	B-126	B-145
			29500	3010	1.72				29500	3010	2.08	2 - 6170DB - 165	B-110	B-126	B-145
			29500	3010	2.15				29500	3010	2.24	2 - 6175DB - 165	B-110	B-126	B-145
			41700	4250	2.24				41700	4250	2.24	2 - 6180DA - 165	B-110	B-126	B-145
			41700	4250	2.77				41700	4250	3.34	2 - 6180DB - 165	B-111	B-127	B-146
7.44	1230	125	16000	1630	*1	8.97	1230	125	16000	1630	*1	2 - 6140DB - 195	B-109	B-125	B-144
	1360	138	16000	1630	*1		1360	138	16000	1630	*1	2 - 6145DB - 195	B-109	B-125	B-144
	1730	177	**22100**	**2250**	**1.01**		1440	146	**22100**	**2250**	**1.07**	**2 - 6160DA - 195**	**B-110**	**B-126**	**B-145**
			22100	2250	1.01				22100	2250	1.22	2 - 6160DB - 195	B-110	B-126	B-145
			22100	2250	1.07				22100	2250	1.07	2 - 6165DA - 195	B-110	B-126	B-145
			22100	2250	1.21				22100	2250	1.46	2 - 6165DB - 195	B-110	B-126	B-145
			29500	3010	1.46				29500	3010	1.76	2 - 6170DB - 195	B-110	B-126	B-145
			29500	3010	1.82				29500	3010	2.19	2 - 6175DB - 195	B-110	B-126	B-145
			41700	4250	2.24				41700	4250	2.24	2 - 6180DA - 195	B-110	B-126	B-145
			41700	4250	2.34				41700	4250	2.83	2 - 6180DB - 195	B-111	B-127	B-146
			41700	4250	2.84				41700	4250	3.43	2 - 6185DB - 195	B-111	B-127	B-146
6.28	1340	136	16000	1630	*1	7.58	1340	136	16000	1630	*1	2 - 6145DB - 231	B-109	B-125	B-144
	2050	209	**22100**	**2250**	**1.02**		1700	173	**22100**	**2250**	**1.07**	**2 - 6165DA - 231**	**B-110**	**B-126**	**B-145**
			22100	2250	1.02				22100	2250	1.23	2 - 6165DB - 231	B-110	B-126	B-145
			29500	3010	1.07				29500	3010	1.07	2 - 6170DA - 231	B-110	B-126	B-145
			29500	3010	1.23				29500	3010	1.49	2 - 6170DB - 231	B-110	B-126	B-145
			29500	3010	1.53				29500	3010	1.85	2 - 6175DB - 231	B-110	B-126	B-145
			41700	4250	1.97				41700	4250	2.24	2 - 6180DA - 231	B-110	B-126	B-145
			41700	4250	1.97				41700	4250	2.38	2 - 6180DB - 231	B-111	B-127	B-146
			41700	4250	2.24				41700	4250	2.24	2 - 6185DA - 231	B-110	B-126	B-145
			41700	4250	2.43				41700	4250	2.94	2 - 6185DB - 231	B-111	B-127	B-146
5.31	1760	179	22100	2250	*1	6.41	1760	179	22100	2250	*1	2 - 6160DA - 273	B-110	B-126	B-145
	2430	247	22100	2250	0.87		2010	205	22100	2250	1.04	2 - 6165DA - 273	B-110	B-126	B-145
			29500	**3010**	**1.04**				**29500**	**3010**	**1.07**	**2 - 6170DA - 273**	**B-110**	**B-126**	**B-145**
			29500	3010	1.04				29500	3010	1.26	2 - 6170DB - 273	B-110	B-126	B-145
			29500	3010	1.07				29500	3010	1.07	2 - 6175DA - 273	B-110	B-126	B-145
			29500	3010	1.30				29500	3010	1.57	2 - 6175DB - 273	B-110	B-126	B-145
			41700	4250	1.67				41700	4250	2.01	2 - 6180DA - 273	B-110	B-126	B-145
			41700	4250	2.06				41700	4250	2.24	2 - 6185DA - 273	B-110	B-126	B-145
			41700	4250	2.06				41700	4250	2.49	2 - 6185DB - 273	B-111	B-127	B-146
			59000	6010	2.63				59000	6010	3.17	2 - 6190DA - 273	B-111	B-128	B-147
4.55	1760	179	22100	2250	*1	5.49	1760	179	22100	2250	*1	2 - 6160DA - 319	B-110	B-126	B-145
	2840	289	22100	2250	*1		2350	240	22100	2250	*1	2 - 6165DA - 319	B-110	B-126	B-145
			29500	**3010**	**1.07**				**29500**	**3010**	**1.07**	**2 - 6175DA - 319**	**B-110**	**B-126**	**B-145**
			29500	3010	1.11				29500	3010	1.34	2 - 6175DB - 319	B-110	B-126	B-145
			41700	4250	1.43				41700	4250	1.72	2 - 6180DA - 319	B-110	B-126	B-145
			41700	4250	1.76				41700	4250	2.13	2 - 6185DA - 319	B-110	B-126	B-145
			59000	6010	2.25				59000	6010	2.71	2 - 6190DA - 319	B-111	B-128	B-147
			59000	6010	2.81				59000	6010	3.39	2 - 6195DA - 319	B-111	B-128	B-147

1. Combinations in **bold** are the recommended models for operations for 10 hours/day with uniform load (service factor is about 1.0 for motor rating at 50Hz).
2. Motor slippage may affect n_1 and n_2. Refer to technical data for details.
3. CNHM, CHHM, CNFM, CHFM, CNVM, and CVVM indicate types. Refer to page B-10 for details.
4. Lubrication method is different for each model. Refer to "Lubrication" section in page F-4~F-5 for details.
5. "6" at the end of "input capacity symbol" indicates models with 6P motor. Other models come with 4P motor.

Selection Tables Gearmotors

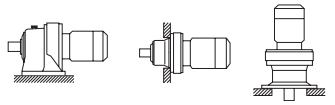

CHHM/CNHM CHFM/CNFM CVVM/CNVM

n_1: Motor Speed

1.5 kW	Hz	50Hz		60Hz	
	P	4	6	4	6
	n_1 r/min	1450	980	1750	1165

50Hz						60Hz						Nomenclature	Page of Dimension Sheet		
Output Speed n_2 [r/min]	Output Torque Tout [N·m]	[kgf·m]	Allowable Radial Load Pro [N]	[kgf]	SF	Output Speed n_2 [r/min]	Output Torque Tout [N·m]	[kgf·m]	Allowable Radial Load Pro [N]	[kgf]	SF	Input Capacity Symbol - Frame Size - Reduction Ratio	CNHM CHHM	CNFM CHFM	CNVM CVVM
3.85	2100	214	22100	2250	*1	4.64	2100	214	22100	2250	*1	2 - 6165DA - 377	B-110	B-126	B-145
	2530	258	29500	3010	*1		2530	258	29500	3010	*1	2 - 6170DA - 377	B-110	B-126	B-145
	3350	342	29500	3010	0.94		2780	283	29500	3010	1.07	2 - 6175DA - 377	B-110	B-126	B-145
			29500	3010	0.94				29500	3010	1.13	2 - 6175DB - 377	B-110	B-126	B-145
			41700	4250	1.21				41700	4250	1.46	2 - 6180DA - 377	B-110	B-126	B-145
			41700	4250	1.49				41700	4250	1.80	2 - 6185DA - 377	B-110	B-126	B-145
			59000	6010	1.90				59000	6010	2.30	2 - 6190DA - 377	B-111	B-128	B-147
			59000	6010	2.37				59000	6010	2.87	2 - 6195DA - 377	B-111	B-128	B-147
3.07	3150	321	29500	3010	*1	3.70	3150	321	29500	3010	*1	2 - 6175DA - 473	B-110	B-126	B-145
	4210	429	41700	4250	1.19		3480	355	41700	4250	1.43	2 - 6185DA - 473	B-110	B-126	B-145
			59000	6010	1.52				59000	6010	1.83	2 - 6190DA - 473	B-111	B-128	B-147
			59000	6010	1.89				59000	6010	2.28	2 - 6195DA - 473	B-111	B-128	B-147
2.59	3150	321	29500	3010	*1	3.13	3150	321	29500	3010	*1	2 - 6175DA - 559	B-110	B-126	B-145
	4060	414	41700	4250	*1		4060	414	41700	4250	*1	2 - 6180DA - 559	B-110	B-126	B-145
	4970	507	**41700**	**4250**	**1.01**		4120	420	**41700**	**4250**	**1.21**	**2 - 6185DA - 559**	**B-110**	**B-126**	**B-145**
			59000	6010	1.28				59000	6010	1.55	2 - 6190DA - 559	B-111	B-128	B-147
			59000	6010	1.60				59000	6010	1.93	2 - 6195DA - 559	B-111	B-128	B-147
2.23	4050	413	41700	4250	*1	2.70	4050	413	41700	4250	*1	2 - 6180DA - 649	B-110	B-126	B-145
	5770	588	41300	4210	0.87		4780	487	41700	4250	1.05	2 - 6185DA - 649	B-110	B-126	B-145
			58700	5990	1.11				59000	6010	1.33	2 - 6190DA - 649	B-111	B-128	B-147
			58700	5990	1.38				59000	6010	1.66	2 - 6195DA - 649	B-111	B-128	B-147
1.98	4060	414	41700	4250	*1	2.39	4060	414	41700	4250	*1	2 - 6180DA - 731	B-110	B-126	B-145
	5000	510	41700	4250	*1		5000	510	41700	4250	*1	2 - 6185DA - 731	B-110	B-126	B-145
	6500	663	59000	6010	1.22		5390	549	59000	6010	1.48	2 - 6195DA - 731	B-111	B-128	B-147
1.72	5000	510	41700	4250	*1	2.08	5000	510	41700	4250	*1	2 - 6185DA - 841	B-110	B-126	B-145
	7480	762	**59000**	**6010**	**1.06**		6200	632	**59000**	**6010**	**1.28**	**2 - 6195DA - 841**	**B-111**	**B-128**	**B-147**
			59000	6010	1.06				59000	6010	1.28	2 - 6195DB - 841	B-112	B-128	B-147
1.45	6380	650	58600	5970	*1	1.74	6380	650	58600	5970	*1	2 - 6190DA - 1003	B-111	B-128	B-147
	8920	909	57900	5900	0.89		7390	753	58300	5940	1.08	2 - 6195DA - 1003	B-111	B-128	B-147
1.16	7960	811	59000	6010	*1	1.40	7960	811	59000	6010	*1	2 - 6195DA - 1247	B-111	B-128	B-147
0.980	8760	893	84100	8570	*1	1.18	8360	853	84100	8570	*1	2 - 6205DA - 1479	B-112	B-129	B-148
	13200	1340	104000	10600	0.86		10900	1110	104000	10600	1.03	2 - 6215DA - 1479	B-112	B-129	B-148
0.784	9300	948	84100	8570	*1	0.946	9300	948	84100	8570	*1	2 - 6205DA - 1849	B-112	B-129	B-148
	12700	1290	104000	10600	*1		12700	1290	104000	10600	*1	2 - 6215DA - 1849	B-112	B-129	B-148
	16400	1680	145000	14800	0.97		13600	1390	145000	14800	1.17	2 - 6225DA - 1849	B-113	B-130	B-149
0.702	9300	948	84100	8570	*1	0.847	9300	948	84100	8570	*1	2 - 6205DA - 2065	B-112	B-129	B-148
	12700	1290	104000	10600	*1		12700	1290	104000	10600	*1	2 - 6215DA - 2065	B-112	B-129	B-148
	18400	1870	145000	14800	0.86		15200	1550	145000	14800	1.04	2 - 6225DA - 2065	B-113	B-130	B-149
0.572	12700	1290	104000	10600	*1	0.690	12700	1290	104000	10600	*1	2 - 6215DA - 2537	B-112	B-129	B-148
	15900	1620	145000	14800	*1		15900	1620	145000	14800	*1	2 - 6225DA - 2537	B-113	B-130	B-149
0.476	11300	1150	104000	10600	*1	0.575	11300	1150	104000	10600	*1	2 - 6215DA - 3045	B-112	B-129	B-148
	15100	1540	145000	14800	*1		15100	1540	145000	14800	*1	2 - 6225DA - 3045	B-113	B-130	B-149
0.417	12700	1290	104000	10600	*1	0.503	12700	1290	104000	10600	*1	2 - 6215DA - 3481	B-112	B-129	B-148
	15900	1620	145000	14800	*1		15900	1620	145000	14800	*1	2 - 6225DA - 3481	B-113	B-130	B-149
0.327	11300	1150	104000	10600	*1	0.394	11300	1150	104000	10600	*1	2 - 6215DA - 4437	B-112	B-129	B-148
	15100	1540	145000	14800	*1		15100	1540	145000	14800	*1	2 - 6225DA - 4437	B-113	B-130	B-149
0.282	12700	1290	104000	10600	*1	0.341	12700	1290	104000	10600	*1	2 - 6215DA - 5133	B-112	B-129	B-148
	15900	1620	145000	14800	*1		15900	1620	145000	14800	*1	2 - 6225DA - 5133	B-113	B-130	B-149

6. "*2" indicate models manufactured with reducer and motor separately mounted on a common baseplate (horizontal shaft direction) or on an adaptor (vertical shaft direction). Consult us for details, including dimensions.
7. Allowable radial load (Pro) is the value at the midpoint of the slow speed shaft.
8. "*3" indicate models with reduction ratios equal to nominal ratio. Refer to Table A-3 "6000SK Series (Actual Reduction Ratio)" on page A-4 for actual reduction ratio. Indicated reduction ratio is the same as actual reduction ratio for other models.
9. Maintain torque load during operation within "Output torque" in the table for models with "*1" in the SF column. They cannot be operated with 100% motor rating.

Selection Tables Gearmotors

1.5 kW

n_1: Motor Speed

Hz	50Hz		60Hz	
P	4	6	4	6
n_1 r/min	1450	980	1750	1165

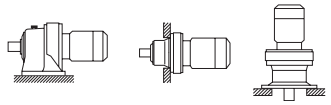

50Hz Output Speed n_2 [r/min]	50Hz Output Torque Tout [N·m]	50Hz Output Torque Tout [kgf·m]	50Hz Allowable Radial Load Pro [N]	50Hz Allowable Radial Load Pro [kgf]	50Hz SF	60Hz Output Speed n_2 [r/min]	60Hz Output Torque Tout [N·m]	60Hz Output Torque Tout [kgf·m]	60Hz Allowable Radial Load Pro [N]	60Hz Allowable Radial Load Pro [kgf]	60Hz SF	Nomenclature: Input Capacity Symbol	Frame Size	Reduction Ratio	Page of Dimension Sheet: CNHM CHHM	CNFM CHFM	CNVM CVVM
0.235	11300	1150	104000	10600	*1	0.283	11300	1150	104000	10600	*1	2 -	6215DA	- 6177	B-112	B-129	B-148
	15100	1540	145000	14800	*1		15100	1540	145000	14800	*1	2 -	6225DA	- 6177	B-113	B-130	B-149
0.192	11300	1150	104000	10600	*1	0.231	11300	1150	104000	10600	*1	2 -	6215DA	- 7569	B-112	B-129	B-148
	15100	1540	145000	14800	*1		15100	1540	145000	14800	*1	2 -	6225DA	- 7569	B-113	B-130	B-149

2.2 kW

n_1: Motor Speed

Hz	50Hz		60Hz	
P	4	6	4	6
n_1 r/min	1450	980	1750	1165

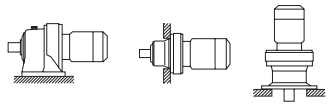

50Hz Output Speed n_2 [r/min]	50Hz Output Torque Tout [N·m]	50Hz Output Torque Tout [kgf·m]	50Hz Allowable Radial Load Pro [N]	50Hz Allowable Radial Load Pro [kgf]	50Hz SF	60Hz Output Speed n_2 [r/min]	60Hz Output Torque Tout [N·m]	60Hz Output Torque Tout [kgf·m]	60Hz Allowable Radial Load Pro [N]	60Hz Allowable Radial Load Pro [kgf]	60Hz SF	Nomenclature: Input Capacity Symbol	Frame Size	Reduction Ratio	Page of Dimension Sheet: CNHM CHHM	CNFM CHFM	CNVM CVVM
580	34.4	3.51	**2050**	**209**	**1.09**	700	28.5	2.91	**1970**	**201**	**1.09**	**3 -**	**6090SK**	**- 2.5 *3**	**B-98**	**-**	**B-133**
			2050	209	1.23				1970	201	1.23	3 -	6095SK	- 2.5 *3	B-98	-	B-133
			2050	209	1.45				1970	201	1.45	3 -	6100SK	- 2.5 *3	B-99	-	B-134
			2050	209	1.70				1970	201	1.70	3 -	6105SK	- 2.5 *3	B-99	-	B-134
			2790	284	2.34				2650	270	2.34	3 -	6110SK	- 2.5 *3	B-99	-	B-134
			2790	284	2.93				2650	270	2.93	3 -	6115SK	- 2.5 *3	B-99	-	B-134
483	41.3	4.21	**2120**	**216**	**1.06**	583	34.2	3.49	**2040**	**208**	**1.06**	**3 -**	**6090SK**	**- 3 *3**	**B-98**	**-**	**B-133**
			2120	216	1.20				2040	208	1.20	3 -	6095SK	- 3 *3	B-98	-	B-133
			2120	216	1.50				2040	208	1.50	3 -	6100SK	- 3 *3	B-99	-	B-134
			2120	216	1.76				2040	208	1.76	3 -	6105SK	- 3 *3	B-99	-	B-134
			2960	302	2.40				2820	287	2.40	3 -	6110SK	- 3 *3	B-99	-	B-134
			2960	302	3.00				2820	287	3.00	3 -	6115SK	- 3 *3	B-99	-	B-134
363	55.1	5.61	**2300**	**234**	**1.06**	438	45.6	4.65	**2240**	**228**	**1.06**	**3 -**	**6090SK**	**- 4 *3**	**B-98**	**-**	**B-133**
			2300	234	1.20				2240	228	1.20	3 -	6095SK	- 4 *3	B-98	-	B-133
			2300	234	1.46				2240	228	1.46	3 -	6100SK	- 4 *3	B-99	-	B-134
			2300	234	1.72				2240	228	1.72	3 -	6105SK	- 4 *3	B-99	-	B-134
			3170	323	2.43				3010	307	2.43	3 -	6110SK	- 4 *3	B-99	-	B-134
			3170	323	3.04				3010	307	3.04	3 -	6115SK	- 4 *3	B-99	-	B-134
290	68.8	7.02	**2420**	**247**	**1.02**	350	57.0	5.81	**2330**	**238**	**1.02**	**3 -**	**6090SK**	**- 5 *3**	**B-98**	**-**	**B-133**
			2420	247	1.20				2330	238	1.20	3 -	6095SK	- 5 *3	B-98	-	B-133
			2420	247	1.43				2330	238	1.43	3 -	6100SK	- 5 *3	B-99	-	B-134
			2420	247	1.68				2330	238	1.68	3 -	6105SK	- 5 *3	B-99	-	B-134
			3330	339	2.09				3180	324	2.09	3 -	6110SK	- 5 *3	B-99	-	B-134
			3330	339	2.62				3180	324	2.62	3 -	6115SK	- 5 *3	B-99	-	B-134
242	82.6	8.42	**2410**	**246**	**1.03**	292	68.4	6.98	**2370**	**242**	**1.03**	**3 -**	**6095SK**	**- 6 *3**	**B-98**	**-**	**B-133**
			2410	246	1.21				2370	242	1.21	3 -	6100SK	- 6 *3	B-99	-	B-134
			2410	246	1.43				2370	242	1.43	3 -	6105SK	- 6 *3	B-99	-	B-134
			3520	359	1.92				3370	344	1.92	3 -	6110SK	- 6 *3	B-99	-	B-134
			3520	359	2.40				3370	344	2.40	3 -	6115SK	- 6 *3	B-99	-	B-134
			4090	**417**	**1.07**				**3860**	**393**	**1.07**	**3 -**	**6100**	**- 6**	**B-101**	**B-117**	**B-136**
			4090	417	1.45				3860	393	1.45	3 -	6105	- 6	B-101	B-117	B-136
			4640	473	1.61				4370	445	1.61	3 -	6110	- 6	B-101	B-117	B-136
			4640	473	1.78				4370	445	1.78	3 -	6115	- 6	B-101	B-117	B-136
			5260	536	2.30				4950	505	2.30	3 -	6120	- 6	B-101	B-117	B-136

1. Combinations in **bold** are the recommended models for operations for 10 hours/day with uniform load (service factor is about 1.0 for motor rating at 50Hz).
2. Motor slippage may affect n_1 and n_2. Refer to technical data for details.
3. CNHM, CHHM, CNFM, CHFM, CNVM, and CVVM indicate types. Refer to page B-10 for details.
4. Lubrication method is different for each model. Refer to "Lubrication" section in page F-4~F-5 for details.
5. "6" at the end of "input capacity symbol" indicates models with 6P motor. Other models come with 4P motor.

Selection Tables Gearmotors

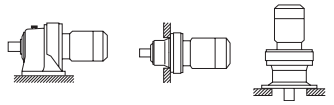

CHHM/CNHM CHFM/CNFM CVVM/CNVM

n1: Motor Speed

2.2 kW	Hz	50Hz		60Hz	
	P	4	6	4	6
	n1 r/min	1450	980	1750	1165

50Hz						60Hz						Nomenclature	Page of Dimension Sheet		
Output Speed n2 [r/min]	Output Torque Tout [N·m]	[kgf·m]	Allowable Radial Load Pro [N]	[kgf]	SF	Output Speed n2 [r/min]	Output Torque Tout [N·m]	[kgf·m]	Allowable Radial Load Pro [N]	[kgf]	SF	Input Capacity Symbol - Frame Size - Reduction Ratio	CNHM CHHM	CNFM CHFM	CNVM CVVM
			2540	259	0.80				2500	255	0.80	3 - 6095SK - 8 *3	B-98	-	B-133
			2540	**259**	**1.13**				**2500**	**255**	**1.13**	**3 - 6105SK - 8 *3**	**B-99**	**-**	**B-134**
			3730	380	1.68				3580	365	1.68	3 - 6110SK - 8 *3	B-99	-	B-134
			3730	380	2.10				3580	365	2.10	3 - 6115SK - 8 *3	B-99	-	B-134
181	110	11.2	**4560**	**465**	**1.07**	219	91.2	9.30	**4300**	**438**	**1.07**	**3 - 6100 - 8**	**B-101**	**B-117**	**B-136**
			4560	465	1.45				4300	438	1.45	3 - 6105 - 8	B-101	B-117	B-136
			5170	527	1.61				4870	496	1.61	3 - 6110 - 8	B-101	B-117	B-136
			5170	527	1.78				4870	496	1.78	3 - 6115 - 8	B-101	B-117	B-136
			5870	598	2.30				5520	563	2.30	3 - 6120 - 8	B-101	B-117	B-136
			2610	266	0.80				2580	263	0.80	3 - 6095SK - 10 *3	B-98	-	B-133
145	138	14.0	**2610**	**266**	**1.00**	175	114	11.6	**2580**	**263**	**1.00**	**3 - 6105SK - 10 *3**	**B-99**	**-**	**B-134**
			3960	404	1.39				3820	389	1.39	3 - 6110SK - 10 *3	B-99	-	B-134
			3960	404	1.74				3820	389	1.74	3 - 6115SK - 10 *3	B-99	-	B-134
			5170	**527**	**1.07**				**4870**	**497**	**1.07**	**3 - 6100 - 11**	**B-101**	**B-117**	**B-136**
			5170	527	1.45				4870	497	1.45	3 - 6105 - 11	B-101	B-117	B-136
			5900	601	1.61				5560	567	1.61	3 - 6110 - 11	B-101	B-117	B-136
132	151	15.4	5900	601	1.78	159	125	12.8	5560	567	1.78	3 - 6115 - 11	B-101	B-117	B-136
			6670	680	2.30				6280	640	2.30	3 - 6120 - 11	B-101	B-117	B-136
			6670	680	2.69				6280	640	2.69	3 - 6125 - 11	B-101	B-117	B-136
			5360	**547**	**1.07**				**5060**	**516**	**1.07**	**3 - 6100 - 13**	**B-101**	**B-117**	**B-136**
			5360	547	1.45				5060	516	1.45	3 - 6105 - 13	B-101	B-117	B-136
			6090	621	1.61				5740	586	1.61	3 - 6110 - 13	B-101	B-117	B-136
112	179	18.2	6090	621	1.77	135	148	15.1	5740	586	1.77	3 - 6115 - 13	B-101	B-117	B-136
			6890	702	2.30				6490	662	2.30	3 - 6120 - 13	B-101	B-117	B-136
			6890	702	2.69				6490	662	2.69	3 - 6125 - 13	B-101	B-117	B-136
			5400	**550**	**1.07**				**5340**	**544**	**1.07**	**3 - 6100 - 15**	**B-101**	**B-117**	**B-136**
			5400	550	1.45				5340	544	1.45	3 - 6105 - 15	B-101	B-117	B-136
			6490	662	1.61				6120	624	1.61	3 - 6110 - 15	B-101	B-117	B-136
96.7	206	21.0	6490	662	1.77	117	171	17.4	6120	624	1.77	3 - 6115 - 15	B-101	B-117	B-136
			7390	753	2.30				6960	710	2.30	3 - 6120 - 15	B-101	B-117	B-136
			7390	753	2.69				6960	710	2.69	3 - 6125 - 15	B-101	B-117	B-136
			5400	**550**	**1.12**				**5400**	**550**	**1.12**	**3 - 6105 - 17**	**B-101**	**B-117**	**B-136**
			6550	668	1.45				6180	630	1.45	3 - 6110 - 17	B-101	B-117	B-136
85.3	234	23.9	6550	668	1.77	103	194	19.8	6180	630	1.77	3 - 6115 - 17	B-101	B-117	B-136
			7460	760	2.22				7030	716	2.30	3 - 6120 - 17	B-101	B-117	B-136
			7460	760	2.57				7030	716	2.57	3 - 6125 - 17	B-101	B-117	B-136
			5400	**550**	**1.04**				**5400**	**550**	**1.06**	**3 - 6105 - 21**	**B-101**	**B-117**	**B-136**
			6920	706	1.24				6540	667	1.24	3 - 6110 - 21	B-101	B-117	B-136
			6920	706	1.41				6540	667	1.41	3 - 6115 - 21	B-101	B-117	B-136
69.0	289	29.5	8180	834	1.80	83.3	240	24.4	7710	786	1.80	3 - 6120 - 21	B-101	B-117	B-136
			8180	834	2.18				7710	786	2.22	3 - 6125 - 21	B-101	B-117	B-136
			9580	976	2.70				9020	919	2.79	3 - 6130 - 21	B-102	B-118	B-137
			7010	**715**	**1.01**				**6620**	**675**	**1.01**	**3 - 6115 - 25**	**B-101**	**B-117**	**B-136**
			8560	873	1.40				8070	823	1.40	3 - 6120 - 25	B-101	B-117	B-136
58.0	344	35.1	8560	873	1.80	70.0	285	29.1	8070	823	1.80	3 - 6125 - 25	B-101	B-117	B-136
			9950	1010	2.27				9370	955	2.35	3 - 6130 - 25	B-102	B-118	B-137
			9950	1010	2.61				9370	955	2.70	3 - 6135 - 25	B-102	B-118	B-137
			7160	**730**	**1.01**				**6800**	**693**	**1.01**	**3 - 6115 - 29**	**B-101**	**B-117**	**B-136**
			8880	905	1.30				8380	854	1.36	3 - 6120 - 29	B-101	B-117	B-136
			8880	905	1.58				8380	854	1.71	3 - 6125 - 29	B-101	B-117	B-136
50.0	399	40.7	10500	1070	1.95	60.3	331	33.7	9850	1000	2.04	3 - 6130 - 29	B-102	B-118	B-137
			10500	1070	2.22				9850	1000	2.56	3 - 6135 - 29	B-102	B-118	B-137
			15000	1530	2.70				14200	1450	2.70	3 - 6140 - 29	B-102	B-118	B-137

6. "*2" indicate models manufactured with reducer and motor separately mounted on a common baseplate (horizontal shaft direction) or on an adaptor (vertical shaft direction). Consult us for details, including dimensions.
7. Allowable radial load (Pro) is the value at the midpoint of the slow speed shaft.
8. "*3" indicate models with reduction ratios equal to nominal ratio. Refer to Table A-3 "6000SK Series (Actual Reduction Ratio)" on page A-4 for actual reduction ratio. Indicated reduction ratio is the same as actual reduction ratio for other models.
9. Maintain torque load during operation within "Output torque" in the table for models with "*1" in the SF column. They cannot be operated with 100% motor rating.

Selection Tables Gearmotors

n_1: Motor Speed

2.2 kW	Hz		50Hz		60Hz	
	P		4	6	4	6
	n_1	r/min	1450	980	1750	1165

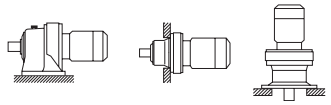

CHHM/CNHM CHFM/CNFM CVVM/CNVM

50Hz						60Hz						Nomenclature				Page of Dimension Sheet		
Output Speed n_2 [r/min]	Output Torque Tout [N·m]	[kgf·m]	Allowable Radial Load Pro [N]	[kgf]	SF	Output Speed n_2 [r/min]	Output Torque Tout [N·m]	[kgf·m]	Allowable Radial Load Pro [N]	[kgf]	SF	Input Capacity Symbol	-	Frame Size	- Reduction Ratio	CNHM CHHM	CNFM CHFM	CNVM CVVM
			4960	506	0.82				7230	737	0.82	3	-	6115	- 35	B-101	B-117	B-136
			9350	**954**	**1.08**				**8830**	**900**	**1.13**	**3**	**-**	**6120**	**- 35**	**B-101**	**B-117**	**B-136**
			9350	954	1.31				8830	900	1.45	3	-	6125	- 35	B-101	B-117	B-136
41.4	482	49.1	11000	1120	1.62	50.0	399	40.7	10300	1050	1.69	3	-	6130	- 35	B-102	B-118	B-137
			11000	1120	1.87				10300	1050	1.93	3	-	6135	- 35	B-102	B-118	B-137
			16000	1630	2.37				15200	1550	2.37	3	-	6140	- 35	B-102	B-118	B-137
			16000	1630	2.85				15200	1550	3.42	3	-	6145	- 35	B-102	B-118	B-137
			9810	**1000**	**1.06**				**9380**	**956**	**1.08**	**3**	**-**	**6125**	**- 43**	**B-101**	**B-117**	**B-136**
			11800	1200	1.32				11100	1130	1.36	3	-	6130	- 43	B-102	B-118	B-137
			11800	1200	1.52				11100	1130	1.71	3	-	6135	- 43	B-102	B-118	B-137
33.7	592	60.3	16000	1630	1.79	40.7	490	50.0	15900	1620	1.79	3	-	6140	- 43	B-102	B-118	B-137
			16000	1630	2.12				15900	1620	2.45	3	-	6145	- 43	B-102	B-118	B-137
			20600	2100	2.93				19300	1970	3.39	3	-	6160	- 43	B-103	B-119	B-138
			9810	1000	0.90				9760	995	1.04	3	-	6125	- 51	B-101	B-117	B-136
			12200	**1250**	**1.11**				**11500**	**1180**	**1.15**	**3**	**-**	**6130**	**- 51**	**B-102**	**B-118**	**B-137**
			12200	1250	1.16				11500	1180	1.33	3	-	6135	- 51	B-102	B-118	B-137
28.4	702	71.6	16000	1630	1.56	34.3	582	59.3	16000	1630	1.56	3	-	6140	- 51	B-102	B-118	B-137
			16000	1630	1.68				16000	1630	1.92	3	-	6145	- 51	B-102	B-118	B-137
			21300	2180	2.50				20100	2050	2.61	3	-	6160	- 51	B-103	B-119	B-138
			21300	2180	2.99				20100	2050	3.42	3	-	6165	- 51	B-103	B-119	B-138
			12800	**1300**	**1.11**				**12100**	**1230**	**1.15**	**3**	**-**	**6135**	**- 59**	**B-102**	**B-118**	**B-137**
			16000	1630	1.35				16000	1630	1.35	3	-	6140	- 59	B-102	B-118	B-137
24.6	812	82.8	16000	1630	1.45	29.7	673	68.6	16000	1630	1.66	3	-	6145	- 59	B-102	B-118	B-137
			22100	2250	2.01				22100	2250	2.01	3	-	6160	- 59	B-103	B-119	B-138
			22100	2250	2.59				22100	2250	2.61	3	-	6165	- 59	B-103	B-119	B-138
			13500	1380	0.92				12800	1300	0.98	3	-	6135	- 71	B-102	B-118	B-137
			16000	**1630**	**1.10**				**16000**	**1630**	**1.10**	**3**	**-**	**6140**	**- 71**	**B-102**	**B-118**	**B-137**
20.4	977	99.6	16000	1630	1.19	24.6	810	82.5	16000	1630	1.38	3	-	6145	- 71	B-102	B-118	B-137
			22100	2250	1.58				22100	2250	1.58	3	-	6160	- 71	B-103	B-119	B-138
			22100	2250	2.15				22100	2250	2.57	3	-	6165	- 71	B-103	B-119	B-138
			16000	1630	0.98				16000	1630	1.13	3	-	6145	- 87	B-102	B-118	B-137
16.7	1200	122	22100	2250	1.46	20.1	992	101	22100	2250	1.58	3	-	6160	- 87	B-103	B-119	B-138
			22100	2250	1.71				22100	2250	1.77	3	-	6165	- 87	B-103	B-119	B-138
	780	79.5	14700	1500	*1		780	79.5	14700	1500	*1	3	-	6130DC	- 104	B-109	B-125	B-144
	940	95.8	14700	1500	*1		940	95.8	14700	1500	*1	3	-	6135DC	- 104	B-109	B-125	B-144
			16000	**1630**	**1.01**				**16000**	**1630**	**1.22**	**3**	**-**	**6145DC**	**- 104**	**B-109**	**B-125**	**B-144**
			22100	2250	1.29				22100	2250	1.53	3	-	6160DB	- 104	B-110	B-126	B-145
			22100	2250	1.29				22100	2250	1.56	3	-	6160DC	- 104	B-111	B-127	B-146
13.9	1360	138	22100	2250	1.53	16.8	1120	115	22100	2250	1.53	3	-	6165DB	- 104	B-110	B-126	B-145
			22100	2250	1.55				22100	2250	1.87	3	-	6165DC	- 104	B-111	B-127	B-146
			29500	3010	1.86				29400	3000	2.25	3	-	6170DC	- 104	B-111	B-127	B-146
			29500	3010	2.32				29400	3000	2.80	3	-	6175DC	- 104	B-111	B-127	B-146
			41300	4210	2.99				38800	3960	3.61	3	-	6180DB	- 104	B-111	B-127	B-146

1. Combinations in **bold** are the recommended models for operations for 10 hours/day with uniform load (service factor is about 1.0 for motor rating at 50Hz).
2. Motor slippage may affect n_1 and n_2. Refer to technical data for details.
3. CNHM, CHHM, CNFM, CHFM, CNVM, and CVVM indicate types. Refer to page B-10 for details.
4. Lubrication method is different for each model. Refer to "Lubrication" section in page F-4~F-5 for details.
5. "6" at the end of "input capacity symbol" indicates models with 6P motor. Other models come with 4P motor.

Selection Tables Gearmotors

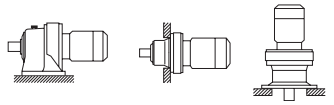

CHHM/CNHM CHFM/CNFM CVVM/CNVM

2.2 kW

n_1: Motor Speed

Hz	50Hz		60Hz	
P	4	6	4	6
n_1 r/min	1450	980	1750	1165

50Hz						60Hz						Nomenclature	Page of Dimension Sheet		
Output Speed n_2 [r/min]	Output Torque Tout [N·m]	[kgf·m]	Allowable Radial Load Pro [N]	[kgf]	SF	Output Speed n_2 [r/min]	Output Torque Tout [N·m]	[kgf·m]	Allowable Radial Load Pro [N]	[kgf]	SF	Input Capacity Symbol - Frame Size - Reduction Ratio	CNHM CHHM	CNFM CHFM	CNVM CVVM
12.0	940	95.8	14700	1500	*1	14.5	940	95.8	14700	1500	*1	3 - 6135DC - 121	B-109	B-125	B-144
	1230	125	16000	1630	*1		1230	125	16000	1630	*1	3 - 6140DC - 121	B-109	B-125	B-144
	1290	132	16000	1630	*1		1290	132	16000	1630	*1	3 - 6145DC - 121	B-109	B-125	B-144
	1580	161	15300	1560	0.82		1310	133	16000	1630	0.98	3 - 6145DC - 121	B-109	B-125	B-144
			22100	2250	1.11				22100	2250	1.34	3 - 6160DB - 121	B-110	B-126	B-145
			22100	2250	1.11				22100	2250	1.34	3 - 6160DC - 121	B-111	B-127	B-146
			22100	2250	1.33				22100	2250	1.53	3 - 6165DB - 121	B-110	B-126	B-145
			22100	2250	1.33				22100	2250	1.61	3 - 6165DC - 121	B-111	B-127	B-146
			29500	3010	1.53				29500	3010	1.53	3 - 6170DB - 121	B-110	B-126	B-145
			29500	3010	1.60				29500	3010	1.94	3 - 6170DC - 121	B-111	B-127	B-146
			29500	3010	2.00				29500	3010	2.41	3 - 6175DC - 121	B-111	B-127	B-146
			41700	4250	2.57				41300	4210	3.11	3 - 6180DB - 121	B-111	B-127	B-146
10.1	1230	125	16000	1630	*1	12.2	1230	125	16000	1630	*1	3 - 6140DC - 143	B-109	B-125	B-144
	1370	140	15900	1620	*1		1370	140	15900	1620	*1	3 - 6145DC - 143	B-109	B-125	B-144
	1860	190	22100	2250	1.13		1550	158	22100	2250	1.36	3 - 6165DB - 143	B-110	B-126	B-145
			29500	3010	1.35				29500	3010	1.53	3 - 6170DB - 143	B-110	B-126	B-145
			29500	3010	1.35				29500	3010	1.64	3 - 6170DC - 143	B-111	B-127	B-146
			29500	3010	1.53				29500	3010	1.53	3 - 6175DB - 143	B-110	B-126	B-145
			29500	3010	1.69				29500	3010	2.04	3 - 6175DC - 143	B-111	B-127	B-146
			41700	4250	2.18				41700	4250	2.63	3 - 6180DB - 143	B-111	B-127	B-146
			41700	4250	2.63				41700	4250	3.17	3 - 6185DB - 143	B-111	B-127	B-146
			59000	6010	2.84				59000	6010	2.84	3 - 6190DA - 143	B-111	B-128	B-147
8.79	1230	125	16000	1630	*1	10.6	1230	125	16000	1630	*1	3 - 6140DC - 165	B-109	B-125	B-144
	1360	138	16000	1630	*1		1360	138	16000	1630	*1	3 - 6145DC - 165	B-109	B-125	B-144
	1760	179	22100	2250	*1		1760	179	22100	2250	*1	3 - 6160DB - 165	B-110	B-126	B-145
	2150	219	22100	2250	0.98		1780	182	22100	2250	1.18	3 - 6165DB - 165	B-110	B-126	B-145
			29500	3010	1.18				29500	3010	1.42	3 - 6170DB - 165	B-110	B-126	B-145
			29500	3010	1.46				29500	3010	1.53	3 - 6175DB - 165	B-110	B-126	B-145
			29500	3010	1.46				29500	3010	1.77	3 - 6175DC - 165	B-111	B-127	B-146
			41700	4250	1.53				41700	4250	1.53	3 - 6180DA - 165	B-110	B-126	B-145
			41700	4250	1.89				41700	4250	2.28	3 - 6180DB - 165	B-111	B-127	B-146
			41700	4250	2.29				41700	4250	2.76	3 - 6185DB - 165	B-111	B-127	B-146
			59000	6010	2.84				59000	6010	2.84	3 - 6190DA - 165	B-111	B-128	B-147
			59000	6010	2.97				59000	6010	3.58	3 - 6190DB - 165	B-112	B-128	B-147
7.44	1760	179	22100	2250	*1	8.97	1760	179	22100	2250	*1	3 - 6160DB - 195	B-110	B-126	B-145
	2100	214	22100	2250	*1		2100	214	22100	2250	*1	3 - 6165DB - 195	B-110	B-126	B-145
	2540	259	22100	2250	0.83		2110	215	22100	2250	1.00	3 - 6165DB - 195	B-110	B-126	B-145
			29500	3010	0.98				29500	3010	1.20	3 - 6170DB - 195	B-110	B-126	B-145
			29500	3010	1.24				29500	3010	1.50	3 - 6175DB - 195	B-110	B-126	B-145
			41700	4250	1.53				41700	4250	1.53	3 - 6180DA - 195	B-110	B-126	B-145
			41700	4250	1.60				41700	4250	1.93	3 - 6180DB - 195	B-111	B-127	B-146
			41700	4250	1.94				41700	4250	2.34	3 - 6185DB - 195	B-111	B-127	B-146
			59000	6010	2.51				59000	6010	2.84	3 - 6190DA - 195	B-111	B-128	B-147
			59000	6010	2.51				59000	6010	3.03	3 - 6190DB - 195	B-112	B-128	B-147
			59000	6010	2.56				59000	6010	2.84	3 - 6195DA - 195	B-111	B-128	B-147
			84100	8570	2.84				84100	8570	2.84	3 - 6205DA - 195	B-112	B-129	B-148

6. "*2" indicate models manufactured with reducer and motor separately mounted on a common baseplate (horizontal shaft direction) or on an adaptor (vertical shaft direction). Consult us for details, including dimensions.
7. Allowable radial load (Pro) is the value at the midpoint of the slow speed shaft.
8. "*3" indicate models with reduction ratios equal to nominal ratio. Refer to Table A-3 "6000SK Series (Actual Reduction Ratio)" on page A-4 for actual reduction ratio. Indicated reduction ratio is the same as actual reduction ratio for other models.
9. Maintain torque load during operation within "Output torque" in the table for models with "*1" in the SF column. They cannot be operated with 100% motor rating.

Selection Tables Gearmotors

n_1: Motor Speed

2.2 kW	Hz		50Hz		60Hz	
	P		4	6	4	6
	n_1	r/min	1450	980	1750	1165

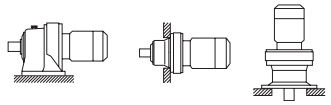

CHHM/CNHM CHFM/CNFM CVVM/CNVM

50Hz						60Hz						Nomenclature	Page of Dimension Sheet		
Output Speed n_2 [r/min]	Output Torque Tout [N·m]	[kgf·m]	Allowable Radial Load Pro [N]	[kgf]	SF	Output Speed n_2 [r/min]	Output Torque Tout [N·m]	[kgf·m]	Allowable Radial Load Pro [N]	[kgf]	SF	Input Capacity Symbol - Frame Size - Reduction Ratio	CNHM CHHM	CNFM CHFM	CNVM CVVM
	1760	179	22100	2250	*1		1760	179	22100	2250	*1	3 - 6160DB - 231	B-110	B-126	B-145
	2100	214	22100	2250	*1		2100	214	22100	2250	*1	3 - 6165DB - 231	B-110	B-126	B-145
			29500	**3010**	**1.05**				**29500**	**3010**	**1.26**	**3 - 6175DB - 231**	**B-110**	**B-126**	**B-145**
			41700	4250	1.34				41700	4250	1.53	3 - 6180DA - 231	B-110	B-126	B-145
			41700	4250	1.34				41700	4250	1.62	3 - 6180DB - 231	B-111	B-127	B-146
6.28			41700	4250	1.53	7.58			41700	4250	1.53	3 - 6185DA - 231	B-110	B-126	B-145
	3010	307	41700	4250	1.66		2500	254	41700	4250	2.00	3 - 6185DB - 231	B-111	B-127	B-146
			59000	6010	2.12				59000	6010	2.56	3 - 6190DA - 231	B-111	B-128	B-147
			59000	6010	2.64				59000	6010	2.84	3 - 6195DA - 231	B-111	B-128	B-147
			59000	6010	2.64				59000	6010	3.19	3 - 6195DB - 231	B-112	B-128	B-147
	2100	214	22100	2250	*1		2100	214	22100	2250	*1	3 - 6165DB - 273	B-110	B-126	B-145
	2530	258	29500	3010	*1		2530	258	29500	3010	*1	3 - 6170DB - 273	B-110	B-126	B-145
			29500	3010	0.88				29500	3010	1.07	3 - 6175DB - 273	B-110	B-126	B-145
			41700	4250	1.14				41700	4250	1.37	3 - 6180DA - 273	B-110	B-126	B-145
5.31			41700	4250	1.40	6.41			41700	4250	1.53	3 - 6185DA - 273	B-110	B-126	B-145
	3560	363	41700	4250	1.40		2950	301	41700	4250	1.70	3 - 6185DB - 273	B-111	B-127	B-146
			59000	6010	1.79				59000	6010	2.16	3 - 6190DA - 273	B-111	B-128	B-147
			59000	6010	2.24				59000	6010	2.70	3 - 6195DA - 273	B-111	B-128	B-147
			84100	8570	2.35				84100	8570	2.66	3 - 6205DA - 273	B-112	B-129	B-148
			84100	8570	2.61				84100	8570	3.14	3 - 6205DB - 273	B-112	B-129	B-148
	2530	258	29500	3010	*1		2530	258	29500	3010	*1	3 - 6170DB - 319	B-110	B-126	B-145
	3150	321	29500	3010	*1		3150	321	29500	3010	*1	3 - 6175DB - 319	B-110	B-126	B-145
			41700	4250	1.20				41700	4250	1.45	3 - 6185DA - 319	B-110	B-126	B-145
4.55			59000	6010	1.53	5.49			59000	6010	1.85	3 - 6190DA - 319	B-111	B-128	B-147
	4160	424	59000	6010	1.91		3450	351	59000	6010	2.31	3 - 6195DA - 319	B-111	B-128	B-147
			84100	8570	1.94				84100	8570	2.20	3 - 6205DA - 319	B-112	B-129	B-148
			84100	8570	2.22				84100	8570	2.68	3 - 6205DB - 319	B-112	B-129	B-148
	3150	321	29500	3010	*1		3150	321	29500	3010	*1	3 - 6175DB - 377	B-110	B-126	B-145
	4050	413	41700	4250	*1		4050	413	41700	4250	*1	3 - 6180DA - 377	B-110	B-126	B-145
			41700	**4250**	**1.02**				**41700**	**4250**	**1.23**	**3 - 6185DA - 377**	**B-110**	**B-126**	**B-145**
3.85			59000	6010	1.30	4.64			59000	6010	1.57	3 - 6190DA - 377	B-111	B-128	B-147
	4920	501	59000	6010	1.62		4070	415	59000	6010	1.95	3 - 6195DA - 377	B-111	B-128	B-147
			84100	8570	1.74				84100	8570	1.97	3 - 6205DA - 377	B-112	B-129	B-148
			84100	8570	1.88				84100	8570	2.27	3 - 6205DB - 377	B-112	B-129	B-148
			104000	10600	2.57				104000	10600	3.11	3 - 6215DA - 377	B-112	B-129	B-148
	4060	414	41700	4250	*1		4060	414	41700	4250	*1	3 - 6180DA - 473	B-110	B-126	B-145
	5000	510	41700	4250	*1		5000	510	41700	4250	*1	3 - 6185DA - 473	B-110	B-126	B-145
			41700	4250	0.81				41700	4250	0.98	3 - 6185DA - 473	B-110	B-126	B-145
			59000	**6010**	**1.03**				**59000**	**6010**	**1.25**	**3 - 6190DA - 473**	**B-111**	**B-128**	**B-147**
3.07			59000	6010	1.29	3.70			59000	6010	1.56	3 - 6195DA - 473	B-111	B-128	B-147
	6170	629	84100	8570	1.34		5110	521	84100	8570	1.52	3 - 6205DA - 473	B-112	B-129	B-148
			84100	8570	1.51				84100	8570	1.82	3 - 6205DB - 473	B-112	B-129	B-148
			104000	10600	2.05				104000	10600	2.48	3 - 6215DA - 473	B-112	B-129	B-148
			145000	14800	2.59				145000	14800	3.13	3 - 6225DA - 473	B-113	B-130	B-149
	5000	510	41700	4250	*1		5000	510	41700	4250	*1	3 - 6185DA - 559	B-110	B-126	B-145
			59000	6010	1.09				59000	6010	1.32	3 - 6195DA - 559	B-111	B-128	B-147
			84100	8570	1.20				84100	8570	1.36	3 - 6205DA - 559	B-112	B-129	B-148
2.59	7290	743	84100	8570	1.28	3.13	6040	616	84100	8570	1.54	3 - 6205DB - 559	B-112	B-129	B-148
			104000	10600	1.74				104000	10600	2.09	3 - 6215DA - 559	B-112	B-129	B-148
			145000	14800	2.19				145000	14800	2.65	3 - 6225DA - 559	B-113	B-130	B-149
			179000	18200	2.81				179000	18200	3.39	3 - 6235DA - 559	B-114	B-131	B-150

1. Combinations in **bold** are the recommended models for operations for 10 hours/day with uniform load (service factor is about 1.0 for motor rating at 50Hz).
2. Motor slippage may affect n_1 and n_2. Refer to technical data for details.
3. CNHM, CHHM, CNFM, CHFM, CNVM, and CVVM indicate types. Refer to page B-10 for details.
4. Lubrication method is different for each model. Refer to "Lubrication" section in page F-4~F-5 for details.
5. "6" at the end of "input capacity symbol" indicates models with 6P motor. Other models come with 4P motor.

Selection Tables Gearmotors

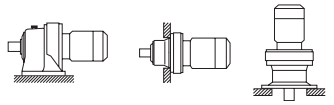

2.2 kW

n_1: Motor Speed

Hz	50Hz		60Hz	
P	4	6	4	6
n_1 r/min	1450	980	1750	1165

50Hz						60Hz						Nomenclature	Page of Dimension Sheet		
Output Speed n_2 [r/min]	Output Torque Tout [N·m]	[kgf·m]	Allowable Radial Load Pro [N]	[kgf]	SF	Output Speed n_2 [r/min]	Output Torque Tout [N·m]	[kgf·m]	Allowable Radial Load Pro [N]	[kgf]	SF	Input Capacity Symbol - Frame Size - Reduction Ratio	CNHM CHHM	CNFM CHFM	CNVM CVVM
2.23	5000	510	41600	4240	*1	2.70	5000	510	41600	4240	*1	3 - 6185DA - 649	B-110	B-126	B-145
	6380	650	58600	5970	*1		6380	650	58600	5970	*1	3 - 6190DA - 649	B-111	B-128	B-147
	8460	863	58000	5910	0.94		7010	715	58400	5950	1.14	3 - 6195DA - 649	B-111	B-128	B-147
			84100	8570	0.98				84100	8570	1.11	3 - 6205DA - 649	B-112	B-129	B-148
			84100	8570	1.10				84100	8570	1.33	3 - 6205DB - 649	B-112	B-129	B-148
			104000	10600	1.49				104000	10600	1.80	3 - 6215DA - 649	B-112	B-129	B-148
			145000	14800	1.88				145000	14800	2.26	3 - 6225DA - 649	B-113	B-130	B-149
			179000	18200	2.42				179000	18200	2.92	3 - 6235DA - 649	B-114	B-131	B-150
1.98	6380	650	59000	6010	*1	2.39	6380	650	59000	6010	*1	3 - 6190DA - 731	B-111	B-128	B-147
	9530	972	58500	5970	0.84		7900	805	59000	6010	1.01	3 - 6195DA - 731	B-111	B-128	B-147
			84100	8570	0.98				84100	8570	1.15	3 - 6205DA - 731	B-112	B-129	B-148
			84100	8570	0.98				84100	8570	1.18	3 - 6205DB - 731	B-112	B-129	B-148
			104000	10600	1.33				104000	10600	1.60	3 - 6215DA - 731	B-112	B-129	B-148
			145000	14800	1.68				145000	14800	2.03	3 - 6225DA - 731	B-113	B-130	B-149
			179000	18200	2.15				179000	18200	2.60	3 - 6235DA - 731	B-114	B-131	B-150
			208000	21200	2.71				208000	21200	3.27	3 - 6245DA - 731	B-114	B-131	B-150
1.72	6380	650	59000	6010	*1	2.08	6380	650	59000	6010	*1	3 - 6190DA - 841	B-111	B-128	B-147
	11000	1120	59000	6010	*1		9090	926	59000	6010	*1	3 - 6195DA - 841	B-111	B-128	B-147
			84100	8570	0.84				84100	8570	1.02	3 - 6205DA - 841	B-112	B-129	B-148
			104000	10600	1.15				104000	10600	1.39	3 - 6215DA - 841	B-112	B-129	B-148
			145000	14800	1.37				145000	14800	1.65	3 - 6225DA - 841	B-113	B-130	B-149
			179000	18200	1.72				179000	18200	2.08	3 - 6235DA - 841	B-114	B-131	B-150
			208000	21200	2.35				208000	21200	2.84	3 - 6245DA - 841	B-114	B-131	B-150
1.45	7960	811	58100	5930	*1	1.74	7960	811	58100	5930	*1	3 - 6195DA - 1003	B-111	B-128	B-147
	13100	1330	84100	8570	*1		10800	1100	84100	8570	*1	3 - 6205DA - 1003	B-112	B-129	B-148
			104000	10600	0.97				104000	10600	1.17	3 - 6215DA - 1003	B-112	B-129	B-148
			145000	14800	1.21				145000	14800	1.46	3 - 6225DA - 1003	B-113	B-130	B-149
			179000	18200	1.57				179000	18200	1.89	3 - 6235DA - 1003	B-114	B-131	B-150
			208000	21200	1.97				208000	21200	2.38	3 - 6245DA - 1003	B-114	B-131	B-150
1.16	9300	948	84100	8570	*1	1.40	9300	948	84100	8570	*1	3 - 6205DA - 1247	B-112	B-129	B-148
	16300	1660	104000	10600	*1		13500	1370	104000	10600	*1	3 - 6215DA - 1247	B-112	B-129	B-148
			145000	14800	0.98				145000	14800	1.19	3 - 6225DA - 1247	B-113	B-130	B-149
			179000	18200	1.26				179000	18200	1.52	3 - 6235DA - 1247	B-114	B-131	B-150
			208000	21200	1.59				208000	21200	1.91	3 - 6245DA - 1247	B-114	B-131	B-150
0.980	11300	1150	104000	10600	*1	1.18	11300	1150	104000	10600	*1	3 - 6215DA - 1479	B-112	B-129	B-148
	19300	1970	145000	14800	*1		16000	1630	145000	14800	*1	3 - 6225DA - 1479	B-113	B-130	B-149
			179000	18200	0.89				179000	18200	1.07	3 - 6235DA - 1479	B-114	B-131	B-150
			208000	21200	1.17				208000	21200	1.42	3 - 6245DA - 1479	B-114	B-131	B-150
0.784	16000	1630	145000	14800	*1	0.946	16000	1630	145000	14800	*1	3 - 6225DA - 1849	B-113	B-130	B-149
	24100	2460	179000	18200	0.85		20000	2040	179000	18200	1.03	3 - 6235DA - 1849	B-114	B-131	B-150
			208000	**21200**	**1.07**				**208000**	**21200**	**1.29**	**3 - 6245DA - 1849**	**B-114**	**B-131**	**B-150**
0.702	15900	1620	145000	14800	*1	0.847	15900	1620	145000	14800	*1	3 - 6225DA - 2065	B-113	B-130	B-149
	20500	2090	179000	18200	*1		20500	2090	179000	18200	*1	3 - 6235DA - 2065	B-114	B-131	B-150
	26900	2750	208000	21200	0.96		22300	2270	208000	21200	1.16	3 - 6245DA - 2065	B-114	B-131	B-150
0.572	20500	2090	179000	18200	*1	0.690	20500	2090	179000	18200	*1	3 - 6235DA - 2537	B-114	B-131	B-150
	25800	2630	208000	21200	*1		25800	2630	208000	21200	*1	3 - 6245DA - 2537	B-114	B-131	B-150
0.476	17200	1750	179000	18200	*1	0.575	17200	1750	179000	18200	*1	3 - 6235DA - 3045	B-114	B-131	B-150
	22600	2310	208000	21200	*1		22600	2310	208000	21200	*1	3 - 6245DA - 3045	B-114	B-131	B-150
0.417	20500	2090	179000	18200	*1	0.503	20500	2090	179000	18200	*1	3 - 6235DA - 3481	B-114	B-131	B-150
	25800	2630	208000	21200	*1		25800	2630	208000	21200	*1	3 - 6245DA - 3481	B-114	B-131	B-150
0.327	17200	1750	179000	18200	*1	0.394	17200	1750	179000	18200	*1	3 - 6235DA - 4437	B-114	B-131	B-150
	22600	2310	208000	21200	*1		22600	2310	208000	21200	*1	3 - 6245DA - 4437	B-114	B-131	B-150
0.282	20500	2090	179000	18200	*1	0.341	20500	2090	179000	18200	*1	3 - 6235DA - 5133	B-114	B-131	B-150
	25800	2630	208000	21200	*1		25800	2630	208000	21200	*1	3 - 6245DA - 5133	B-114	B-131	B-150
0.235	17200	1750	179000	18200	*1	0.283	17200	1750	179000	18200	*1	3 - 6235DA - 6177	B-114	B-131	B-150
	22600	2310	208000	21200	*1		22600	2310	208000	21200	*1	3 - 6245DA - 6177	B-114	B-131	B-150

6. "*2" indicate models manufactured with reducer and motor separately mounted on a common baseplate (horizontal shaft direction) or on an adaptor (vertical shaft direction). Consult us for details, including dimensions.
7. Allowable radial load (Pro) is the value at the midpoint of the slow speed shaft.
8. "*3" indicate models with reduction ratios equal to nominal ratio. Refer to Table A-3 "6000SK Series (Actual Reduction Ratio)" on page A-4 for actual reduction ratio. Indicated reduction ratio is the same as actual reduction ratio for other models.
9. Maintain torque load during operation within "Output torque" in the table for models with "*1" in the SF column. They cannot be operated with 100% motor rating.

Selection Tables Gearmotors

2.2 kW

n_1: Motor Speed

Hz	50Hz		60Hz	
P	4	6	4	6
n_1 r/min	1450	980	1750	1165

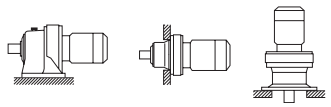

50Hz						60Hz						Nomenclature					Page of Dimension Sheet		
Output Speed n_2 [r/min]	Output Torque Tout [N·m]	[kgf·m]	Allowable Radial Load Pro [N]	[kgf]	SF	Output Speed n_2 [r/min]	Output Torque Tout [N·m]	[kgf·m]	Allowable Radial Load Pro [N]	[kgf]	SF	Input Capacity Symbol	-	Frame Size	-	Reduction Ratio	CNHM CHHM	CNFM CHFM	CNVM CVVM
0.192	17200	1750	179000	18200	*1	0.231	17200	1750	179000	18200	*1	3	-	6235DA	-	7569	B-114	B-131	B-150
	22600	2310	208000	21200	*1		22600	2310	208000	21200	*1	3	-	6245DA	-	7569	B-114	B-131	B-150

3.0 kW

n_1: Motor Speed

Hz	50Hz		60Hz	
P	4	6	4	6
n_1 r/min	1450	980	1750	1165

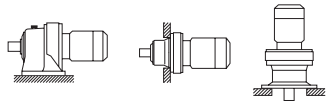

50Hz						60Hz						Nomenclature					Page of Dimension Sheet		
Output Speed n_2 [r/min]	Output Torque Tout [N·m]	[kgf·m]	Allowable Radial Load Pro [N]	[kgf]	SF	Output Speed n_2 [r/min]	Output Torque Tout [N·m]	[kgf·m]	Allowable Radial Load Pro [N]	[kgf]	SF	Input Capacity Symbol	-	Frame Size	-	Reduction Ratio	CNHM CHHM	CNFM CHFM	CNVM CVVM
			1930	**197**	**1.06**				**1870**	**191**	**1.06**	**4**	**-**	**6100SK**	**-**	**2.5 *3**	**B-99**	**-**	**B-134**
			1930	197	1.25				1870	191	1.25	4	-	6105SK	-	2.5 *3	B-99	-	B-134
580	46.9	4.78	2700	275	1.72	700	38.9	3.96	2570	262	1.72	4	-	6110SK	-	2.5 *3	B-99	-	B-134
			2700	275	2.15				2570	262	2.15	4	-	6115SK	-	2.5 *3	B-99	-	B-134
			1980	**202**	**1.10**				**1920**	**196**	**1.10**	**4**	**-**	**6100SK**	**-**	**3 *3**	**B-99**	**-**	**B-134**
			1980	202	1.29				1920	196	1.29	4	-	6105SK	-	3 *3	B-99	-	B-134
483	56.3	5.74	2850	291	1.76	583	46.7	4.76	2730	278	1.76	4	-	6110SK	-	3 *3	B-99	-	B-134
			2850	291	2.20				2730	278	2.20	4	-	6115SK	-	3 *3	B-99	-	B-134
			2130	**217**	**1.07**				**2080**	**212**	**1.07**	**4**	**-**	**6100SK**	**-**	**4 *3**	**B-99**	**-**	**B-134**
			2130	217	1.26				2080	212	1.26	4	-	6105SK	-	4 *3	B-99	-	B-134
363	75.1	7.65	3040	310	1.78	583	62.2	6.34	2900	296	1.78	4	-	6110SK	-	4 *3	B-99	-	B-134
			3040	310	2.23				2900	296	2.23	4	-	6115SK	-	4 *3	B-99	-	B-134
			2210	**225**	**1.23**				**2160**	**220**	**1.23**	**4**	**-**	**6105SK**	**-**	**5 *3**	**B-99**	**-**	**B-134**
290	93.9	9.57	3180	324	1.54	350	77.8	7.93	3040	310	1.26	4	-	6110SK	-	5 *3	B-99	-	B-134
			3180	324	1.92				3040	310	1.78	4	-	6115SK	-	5 *3	B-99	-	B-134
			2190	**223**	**1.05**				**2160**	**220**	**1.05**	**4**	**-**	**6105SK**	**-**	**6 *3**	**B-99**	**-**	**B-134**
			3330	339	1.41				3210	327	1.41	4	-	6110SK	-	6 *3	B-99	-	B-134
			3330	339	1.76				3210	327	1.76	4	-	6115SK	-	6 *3	B-99	-	B-134
242	113	11.5	4610	470	1.18	292	93.3	9.51	4340	443	1.18	4	-	6110	-	6	B-101	B-117	B-136
			4610	470	1.31				4340	443	1.31	4	-	6115	-	6	B-101	B-117	B-136
			5230	534	1.69				4930	502	1.69	4	-	6120	-	6	B-101	B-117	B-136
			5230	534	2.32				4930	502	1.94	4	-	6125	-	6	B-101	B-117	B-136
			2170	221	0.83				2190	223	0.83	4	-	6105SK	-	8 *3	B-99	-	B-134
			3470	**354**	**1.23**				**3370**	**344**	**1.23**	**4**	**-**	**6110SK**	**-**	**8 *3**	**B-99**	**-**	**B-134**
			3470	354	1.54				3370	344	1.54	4	-	6115SK	-	8 *3	B-99	-	B-134
181	150	15.3	5130	523	1.18	219	124	12.7	4830	493	1.18	4	-	6110	-	8	B-101	B-117	B-136
			5130	523	1.31				4830	493	1.31	4	-	6115	-	8	B-101	B-117	B-136
			5830	595	1.69				5490	560	1.69	4	-	6120	-	8	B-101	B-117	B-136
			5830	595	2.32				5490	560	2.32	4	-	6125	-	8	B-101	B-117	B-136
145	188	19.1	**3650**	**372**	**1.02**	175	156	15.9	**3550**	**362**	**1.02**	**4**	**-**	**6110SK**	**-**	**10 *3**	**B-99**	**-**	**B-134**
			3650	372	1.27				3550	362	1.27	4	-	6115SK	-	10 *3	B-99	-	B-134
			5840	**595**	**1.18**				**5510**	**561**	**1.18**	**4**	**-**	**6110**	**-**	**11**	**B-101**	**B-117**	**B-136**
			5840	595	1.31				5510	561	1.31	4	-	6115	-	11	B-101	B-117	B-136
132	206	21.0	6620	675	1.69	159	171	17.4	6240	636	1.69	4	-	6120	-	11	B-101	B-117	B-136
			6620	675	1.97				6240	636	1.97	4	-	6125	-	11	B-101	B-117	B-136

1. Combinations in **bold** are the recommended models for operations for 10 hours/day with uniform load (service factor is about 1.0 for motor rating at 50Hz).
2. Motor slippage may affect n_1 and n_2. Refer to technical data for details.
3. CNHM, CHHM, CNFM, CHFM, CNVM, and CVVM indicate types. Refer to page B-10 for details.
4. Lubrication method is different for each model. Refer to "Lubrication" section in page F-4~F-5 for details.
5. "6" at the end of "input capacity symbol" indicates models with 6P motor. Other models come with 4P motor.

Selection Tables Gearmotors

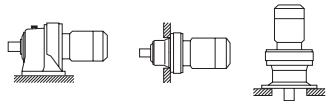

CHHM/CNHM CHFM/CNFM CVVM/CNVM

n_1: Motor Speed

3.0 kW	Hz	50Hz		60Hz	
	P	4	6	4	6
	n_1 r/min	1450	980	1750	1165

50Hz						60Hz						Nomenclature				Page of Dimension Sheet		
Output Speed n_2 [r/min]	Output Torque Tout [N·m]	Output Torque Tout [kgf·m]	Allowable Radial Load Pro [N]	Allowable Radial Load Pro [kgf]	SF	Output Speed n_2 [r/min]	Output Torque Tout [N·m]	Output Torque Tout [kgf·m]	Allowable Radial Load Pro [N]	Allowable Radial Load Pro [kgf]	SF	Input Capacity Symbol	- Frame Size	- Reduction Ratio		CNHM CHHM	CNFM CHFM	CNVM CVVM
112	244	24.9	**6020**	**614**	**1.18**	135	202	20.6	**5690**	**580**	**1.18**	**4**	**- 6110**	**- 13**		**B-101**	**B-117**	**B-136**
			6020	614	1.30				5690	580	1.30	4	- 6115	- 13		B-101	B-117	B-136
			6830	696	1.69				6440	657	1.69	4	- 6120	- 13		B-101	B-117	B-136
			6830	696	1.97				6440	657	1.97	4	- 6125	- 13		B-101	B-117	B-136
96.7	282	28.7	**6410**	**653**	**1.18**	117	233	23.8	**6050**	**617**	**1.18**	**4**	**- 6110**	**- 15**		**B-101**	**B-117**	**B-136**
			6410	653	1.30				6050	617	1.30	4	- 6115	- 15		B-101	B-117	B-136
			7320	747	1.69				6910	704	1.69	4	- 6120	- 15		B-101	B-117	B-136
			7320	747	1.97				6910	704	1.97	4	- 6125	- 15		B-101	B-117	B-136
			8290	845	2.59				7810	796	2.59	4	- 6130	- 15		B-102	B-118	B-137
			8290	845	2.99				7810	796	2.99	4	- 6135	- 15		B-102	B-118	B-137
85.3	319	32.5	**6460**	**659**	**1.06**	103	264	27.0	**6110**	**622**	**1.06**	**4**	**- 6110**	**- 17**		**B-101**	**B-117**	**B-136**
			6460	659	1.30				6110	622	1.30	4	- 6115	- 17		B-101	B-117	B-136
			7390	753	1.63				6970	710	1.69	4	- 6120	- 17		B-101	B-117	B-136
			7390	753	1.89				6970	710	1.89	4	- 6125	- 17		B-101	B-117	B-136
			8900	907	2.42				8380	854	2.42	4	- 6130	- 17		B-102	B-118	B-137
			8900	907	2.76				8380	854	2.76	4	- 6135	- 17		B-102	B-118	B-137
69.0	394	40.2	**6800**	**693**	**1.04**	83.3	327	33.3	**6440**	**657**	**1.04**	**4**	**- 6115**	**- 21**		**B-101**	**B-117**	**B-136**
			8090	825	1.32				7640	779	1.32	4	- 6120	- 21		B-101	B-117	B-136
			8090	825	1.60				7640	779	1.63	4	- 6125	- 21		B-101	B-117	B-136
			9500	969	1.98				8960	913	2.05	4	- 6130	- 21		B-102	B-118	B-137
			9500	969	2.24				8960	913	2.51	4	- 6135	- 21		B-102	B-118	B-137
			14000	1430	2.89				13200	1350	2.89	4	- 6140	- 21		B-102	B-118	B-137
58.0	469	47.8	**8450**	**861**	**1.03**	70.0	389	39.6	**7980**	**814**	**1.03**	**4**	**- 6120**	**- 25**		**B-101**	**B-117**	**B-136**
			8450	861	1.32				7980	814	1.32	4	- 6125	- 25		B-101	B-117	B-136
			9860	1010	1.66				9300	948	1.72	4	- 6130	- 25		B-102	B-118	B-137
			9860	1010	1.92				9300	948	1.98	4	- 6135	- 25		B-102	B-118	B-137
			14700	1490	2.30				13900	1410	2.30	4	- 6140	- 25		B-102	B-118	B-137
			14700	1490	2.64				13900	1410	2.64	4	- 6145	- 25		B-102	B-118	B-137
50.0	544	55.5	**8750**	**892**	**1.16**	60.3	451	46.0	**8280**	**844**	**1.26**	**4**	**- 6125**	**- 29**		**B-101**	**B-117**	**B-136**
			10400	1060	1.43				9770	996	1.49	4	- 6130	- 29		B-102	B-118	B-137
			10400	1060	1.63				9770	996	1.88	4	- 6135	- 29		B-102	B-118	B-137
			15000	1530	1.98				14200	1450	1.98	4	- 6140	- 29		B-102	B-118	B-137
			15000	1530	2.51				14200	1450	2.51	4	- 6145	- 29		B-102	B-118	B-137
41.4	657	67.0	9190	937	0.96	50.0	544	55.5	8700	887	1.06	4	- 6125	- 35		B-101	B-117	B-136
			10900	**1110**	**1.19**				**10300**	**1050**	**1.24**	**4**	**- 6130**	**- 35**		**B-102**	**B-118**	**B-137**
			10900	1110	1.37				10300	1050	1.42	4	- 6135	- 35		B-102	B-118	B-137
			16000	1630	1.74				15200	1550	1.74	4	- 6140	- 35		B-102	B-118	B-137
			16000	1630	2.09				15200	1550	2.51	4	- 6145	- 35		B-102	B-118	B-137
			19100	1950	2.67				18000	1840	3.22	4	- 6160	- 35		B-103	B-119	B-138
33.7	807	82.3	**11600**	**1180**	**1.12**	40.7	669	68.2	**11000**	**1120**	**1.26**	**4**	**- 6135**	**- 43**		**B-102**	**B-118**	**B-137**
			16000	1630	1.31				15800	1610	1.31	4	- 6140	- 43		B-102	B-118	B-137
			16000	1630	1.56				15800	1610	1.80	4	- 6145	- 43		B-102	B-118	B-137
			20400	2080	2.15				19200	1960	2.48	4	- 6160	- 43		B-103	B-119	B-138
			20400	2080	2.60				19200	1960	2.64	4	- 6165	- 43		B-103	B-119	B-138
28.4	957	97.6	12000	1220	0.85	34.3	793	80.9	11400	1160	0.98	4	- 6135	- 51		B-102	B-118	B-137
			16000	**1630**	**1.14**				**16000**	**1630**	**1.14**	**4**	**- 6140**	**- 51**		**B-102**	**B-118**	**B-137**
			16000	1630	1.23				16000	1630	1.41	4	- 6145	- 51		B-102	B-118	B-137
			21200	2160	1.83				20000	2040	1.92	4	- 6160	- 51		B-103	B-119	B-138
			21200	2160	2.19				20000	2040	2.51	4	- 6165	- 51		B-103	B-119	B-138
			24100	2450	2.55				22700	2310	2.80	4	- 6170	- 51		B-103	B-119	B-138

6. "*2" indicate models manufactured with reducer and motor separately mounted on a common baseplate (horizontal shaft direction) or on an adaptor (vertical shaft direction). Consult us for details, including dimensions.
7. Allowable radial load (Pro) is the value at the midpoint of the slow speed shaft.
8. "*3" indicate models with reduction ratios equal to nominal ratio. Refer to Table A-3 "6000SK Series (Actual Reduction Ratio)" on page A-4 for actual reduction ratio. Indicated reduction ratio is the same as actual reduction ratio for other models.
9. Maintain torque load during operation within "Output torque" in the table for models with "*1" in the SF column. They cannot be operated with 100% motor rating.

Selection Tables Gearmotors

n_1: Motor Speed

3.0 kW	Hz		50Hz		60Hz	
	P		4	6	4	6
	n_1	r/min	1450	980	1750	1165

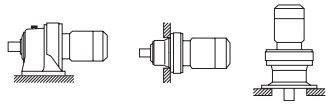

CHHM/CNHM CHFM/CNFM CVVM/CNVM

50Hz						60Hz						Nomenclature						Page of Dimension Sheet		
Output Speed n_2 [r/min]	Output Torque Tout [N·m]	[kgf·m]	Allowable Radial Load Pro [N]	[kgf]	SF	Output Speed n_2 [r/min]	Output Torque Tout [N·m]	[kgf·m]	Allowable Radial Load Pro [N]	[kgf]	SF	Input Capacity Symbol	-	Frame Size	-	Reduction Ratio		CNHM CHHM	CNFM CHFM	CNVM CVVM
			12600	1280	0.81				11900	1210	0.84	4	-	6135	-	59		B-102	B-118	B-137
			16000	1630	0.98				16000	1630	0.98	4	-	6140	-	59		B-102	B-118	B-137
			16000	**1630**	**1.06**				**16000**	**1630**	**1.22**	**4**	**-**	**6145**	**-**	**59**		**B-102**	**B-118**	**B-137**
24.6	1110	113	22100	2250	1.47	29.7	918	93.5	22100	2250	1.47	4	-	6160	-	59		B-103	B-119	B-138
			22100	2250	1.90				22100	2250	1.92	4	-	6165	-	59		B-103	B-119	B-138
			25200	2570	2.21				23800	2420	2.38	4	-	6170	-	59		B-103	B-119	B-138
			25200	2570	2.76				23800	2420	2.76	4	-	6175	-	59		B-103	B-119	B-138
			16000	1630	0.87				16000	1630	1.01	4	-	6145	-	71		B-102	B-118	B-137
			22100	**2250**	**1.16**				**22100**	**2250**	**1.16**	**4**	**-**	**6160**	**-**	**71**		**B-103**	**B-119**	**B-138**
			22100	2250	1.58				22100	2250	1.88	4	-	6165	-	71		B-103	B-119	B-138
20.4	1330	136	26700	2720	1.83	24.6	1100	113	25100	2560	1.97	4	-	6170	-	71		B-103	B-119	B-138
			26700	2720	2.33				25100	2560	2.38	4	-	6175	-	71		B-103	B-119	B-138
			35900	3650	2.93				33700	3440	2.93	4	-	6180	-	71		B-104	B-120	B-139
			22100	**2250**	**1.07**				**21900**	**2230**	**1.16**	**4**	**-**	**6160**	**-**	**87**		**B-103**	**B-119**	**B-138**
			22100	2250	1.26				21900	2230	1.30	4	-	6165	-	87		B-103	B-119	B-138
			28600	2910	1.52				26900	2750	1.60	4	-	6170	-	87		B-103	B-119	B-138
16.7	1630	166	28600	2910	1.87	20.1	1350	138	26900	2750	1.87	4	-	6175	-	87		B-103	B-119	B-138
			38600	3930	2.38				36300	3700	2.38	4	-	6180	-	87		B-104	B-120	B-139
			38600	3930	2.86				36300	3700	2.86	4	-	6185	-	87		B-104	B-120	B-139
			22100	2250	1.14				22100	2250	1.37	4	-	6165DC	-	104		B-111	B-127	B-146
			29500	3010	1.37				29200	2970	1.65	4	-	6170DC	-	104		B-111	B-127	B-146
			29500	3010	1.70				29200	2970	2.06	4	-	6175DC	-	104		B-111	B-127	B-146
13.9	1850	189	41100	4190	2.20	16.8	1530	156	38700	3940	2.65	4	-	6180DB	-	104		B-111	B-127	B-146
			41100	4190	2.65				38700	3940	3.20	4	-	6185DB	-	104		B-111	B-127	B-146
			57400	5850	2.44				53900	5500	2.44	4	-	6190DA	-	104		B-111	B-128	B-147
			57400	5850	2.44				53900	5500	2.44	4	-	6195DA	-	104		B-111	B-128	B-147
	1760	179	22100	2250	*1		1760	179	22100	2250	*1	4	-	6160DC	-	121		B-111	B-127	B-146
			22100	2250	0.98				22100	2250	1.18	4	-	6165DC	-	121		B-111	B-127	B-146
			29500	3010	1.18				29500	3010	1.42	4	-	6170DC	-	121		B-111	B-127	B-146
12.0	2150	219	29500	3010	1.46	14.5	1780	182	29500	3010	1.77	4	-	6175DC	-	121		B-111	B-127	B-146
			41700	4250	1.89				41200	4200	2.28	4	-	6180DB	-	121		B-111	B-127	B-146
			41700	4250	2.23				41200	4200	2.70	4	-	6185DB	-	121		B-111	B-127	B-146
			59000	6010	2.97				57500	5860	3.58	4	-	6190DB	-	121		B-112	B-128	B-147
	1760	179	22100	2250	*1		1760	179	22100	2250	*1	4	-	6160DC	-	143		B-111	B-127	B-146
	2100	214	22100	2250	*1		2100	214	22100	2250	*1	4	-	6165DC	-	143		B-111	B-127	B-146
			22100	2250	0.83				22100	2250	1.00	4	-	6165DC	-	143		B-111	B-127	B-146
			29500	3010	0.98				29500	3010	1.20	4	-	6170DC	-	143		B-111	B-127	B-146
			29500	3010	1.24				29500	3010	1.50	4	-	6175DC	-	143		B-111	B-127	B-146
10.1	2540	259	41700	4250	1.60	12.2	2110	215	41700	4250	1.93	4	-	6180DB	-	143		B-111	B-127	B-146
			41700	4250	1.93				41700	4250	2.33	4	-	6185DB	-	143		B-111	B-127	B-146
			59000	6010	2.08				59000	6010	2.08	4	-	6190DA	-	143		B-111	B-128	B-147
			59000	6010	2.51				59000	6010	3.03	4	-	6190DB	-	143		B-112	B-128	B-147
			59000	6010	3.00				59000	6010	3.62	4	-	6195DB	-	143		B-112	B-128	B-147

1. Combinations in **bold** are the recommended models for operations for 10 hours/day with uniform load (service factor is about 1.0 for motor rating at 50Hz).
2. Motor slippage may affect n_1 and n_2. Refer to technical data for details.
3. CNHM, CHHM, CNFM, CHFM, CNVM, and CVVM indicate types. Refer to page B-10 for details.
4. Lubrication method is different for each model. Refer to "Lubrication" section in page F-4~F-5 for details.
5. "6" at the end of "input capacity symbol" indicates models with 6P motor. Other models come with 4P motor.

Selection Tables Gearmotors

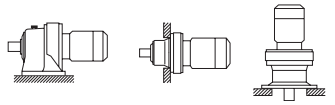

CHHM/CNHM CHFM/CNFM CVVM/CNVM

n1: Motor Speed

3.0 kW	Hz	50Hz		60Hz	
	P	4	6	4	6
	n1 r/min	1450	980	1750	1165

50Hz						60Hz						Nomenclature	Page of Dimension Sheet		
Output Speed n2 [r/min]	Output Torque Tout [N·m]	[kgf·m]	Allowable Radial Load Pro [N]	[kgf]	SF	Output Speed n2 [r/min]	Output Torque Tout [N·m]	[kgf·m]	Allowable Radial Load Pro [N]	[kgf]	SF	Input Capacity Symbol - Frame Size - Reduction Ratio	CNHM CHHM	CNFM CHFM	CNVM CVVM
8.79	2100	214	22100	2250	*1	10.6	2100	214	22100	2250	*1	4 - 6165DC - 165	B-111	B-127	B-146
	2930	299	29500	3010	1.07		2430	248	29500	3010	1.30	4 - 6175DC - 165	B-111	B-127	B-146
			41700	4250	1.38				41700	4250	1.67	4 - 6180DB - 165	B-111	B-127	B-146
			41700	4250	1.68				41700	4250	2.02	4 - 6185DB - 165	B-111	B-127	B-146
			59000	6010	2.08				59000	6010	2.08	4 - 6190DA - 165	B-111	B-128	B-147
			59000	6010	2.17				59000	6010	2.62	4 - 6190DB - 165	B-112	B-128	B-147
			59000	6010	2.70				59000	6010	3.25	4 - 6195DB - 165	B-112	B-128	B-147
7.44	2530	258	29500	3010	*1	8.97	2530	258	29500	3010	*1	4 - 6170DC - 195	B-111	B-127	B-146
	3470	353	29500	3010	0.91		2870	293	29500	3010	1.10	4 - 6175DC - 195	B-111	B-127	B-146
			41700	4250	1.17				41700	4250	1.41	4 - 6180DB - 195	B-111	B-127	B-146
			41700	4250	1.42				41700	4250	1.71	4 - 6185DB - 195	B-111	B-127	B-146
			59000	6010	1.84				59000	6010	2.08	4 - 6190DA - 195	B-111	B-128	B-147
			59000	6010	1.84				59000	6010	2.22	4 - 6190DB - 195	B-112	B-128	B-147
			59000	6010	1.88				59000	6010	2.08	4 - 6195DA - 195	B-111	B-128	B-147
			59000	6010	2.28				59000	6010	2.75	4 - 6195DB - 195	B-112	B-128	B-147
			84100	8570	2.67				84100	8570	3.23	4 - 6205DB - 195	B-112	B-129	B-148
6.28	2530	258	29500	3010	*1	7.58	2530	258	29500	3010	*1	4 - 6170DC - 231	B-111	B-127	B-146
	3150	321	29500	3010	*1		3150	321	29500	3010	*1	4 - 6175DC - 231	B-111	B-127	B-146
	4110	419	41700	4250	1.22		3400	347	41700	4250	1.47	4 - 6185DB - 231	B-111	B-127	B-146
			59000	6010	1.55				59000	6010	1.87	4 - 6190DA - 231	B-111	B-128	B-147
			59000	6010	1.94				59000	6010	2.08	4 - 6195DA - 231	B-111	B-128	B-147
			59000	6010	1.94				59000	6010	2.34	4 - 6195DB - 231	B-112	B-128	B-147
			84100	8570	2.26				84100	8570	2.72	4 - 6205DB - 231	B-112	B-129	B-148
5.31	3150	321	29500	3010	*1	6.41	3150	321	29500	3010	*1	4 - 6175DC - 273	B-111	B-127	B-146
	4850	495	**41700**	**4250**	**1.03**		4020	410	**41700**	**4250**	**1.24**	**4 - 6185DB - 273**	**B-111**	**B-127**	**B-146**
			59000	6010	1.31				59000	6010	1.59	4 - 6190DA - 273	B-111	B-128	B-147
			59000	6010	1.64				59000	6010	1.98	4 - 6195DA - 273	B-111	B-128	B-147
			84100	8570	1.72				84100	8570	1.95	4 - 6205DA - 273	B-112	B-129	B-148
			84100	8570	1.91				84100	8570	2.31	4 - 6205DB - 273	B-112	B-129	B-148
			104000	10600	2.57				104000	10600	3.11	4 - 6215DA - 273	B-112	B-129	B-148
4.55	4050	413	41700	4250	*1	5.49	4050	413	41700	4250	*1	4 - 6180DB - 319	B-111	B-127	B-146
	5670	578	41700	4250	0.88		4700	479	41700	4250	1.06	4 - 6185DB - 319	B-111	B-127	B-146
			59000	6010	1.12				59000	6010	1.36	4 - 6190DA - 319	B-111	B-128	B-147
			59000	6010	1.40				59000	6010	1.69	4 - 6195DA - 319	B-111	B-128	B-147
			84100	8570	1.42				84100	8570	1.61	4 - 6205DA - 319	B-112	B-129	B-148
			84100	8570	1.63				84100	8570	1.96	4 - 6205DB - 319	B-112	B-129	B-148
			104000	10600	2.23				104000	10600	2.69	4 - 6215DA - 319	B-112	B-129	B-148
			145000	14800	2.65				144000	14700	3.20	4 - 6225DA - 319	B-113	B-130	B-149
3.85	5000	510	41700	4250	*1	4.64	5000	510	41700	4250	*1	4 - 6185DB - 377	B-111	B-127	B-146
	6700	683	59000	6010	1.19		5550	566	59000	6010	1.43	4 - 6195DA - 377	B-111	B-128	B-147
			84100	8570	1.28				84100	8570	1.45	4 - 6205DA - 377	B-112	B-129	B-148
			84100	8570	1.38				84100	8570	1.66	4 - 6205DB - 377	B-112	B-129	B-148
			104000	10600	1.89				104000	10600	2.28	4 - 6215DA - 377	B-112	B-129	B-148
			145000	14800	2.24				145000	14800	2.71	4 - 6225DA - 377	B-113	B-130	B-149
			179000	18200	2.82				179000	18200	3.40	4 - 6235DA - 377	B-114	B-131	B-150
3.07	6380	650	59000	6010	*1	3.70	6380	650	59000	6010	*1	4 - 6190DA - 473	B-111	B-128	B-147
	8410	857	58800	6000	0.95		6970	710	59000	6010	1.14	4 - 6195DA - 473	B-111	B-128	B-147
			84100	8570	0.98				84100	8570	1.12	4 - 6205DA - 473	B-112	B-129	B-148
			84100	8570	1.11				84100	8570	1.33	4 - 6205DB - 473	B-112	B-129	B-148
			104000	10600	1.50				104000	10600	1.82	4 - 6215DA - 473	B-112	B-129	B-148
			145000	14800	1.90				145000	14800	2.30	4 - 6225DA - 473	B-113	B-130	B-149
			179000	18200	2.44				179000	18200	2.94	4 - 6235DA - 473	B-114	B-131	B-150

6. "*2" indicate models manufactured with reducer and motor separately mounted on a common baseplate (horizontal shaft direction) or on an adaptor (vertical shaft direction). Consult us for details, including dimensions.
7. Allowable radial load (Pro) is the value at the midpoint of the slow speed shaft.
8. "*3" indicate models with reduction ratios equal to nominal ratio. Refer to Table A-3 "6000SK Series (Actual Reduction Ratio)" on page A-4 for actual reduction ratio. Indicated reduction ratio is the same as actual reduction ratio for other models.
9. Maintain torque load during operation within "Output torque" in the table for models with "*1" in the SF column. They cannot be operated with 100% motor rating.

Selection Tables Gearmotors

n_1: Motor Speed

3.0 kW	Hz		50Hz		60Hz	
	P		4	6	4	6
	n_1	r/min	1450	980	1750	1165

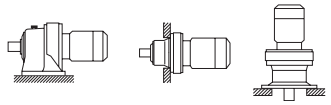

CHHM/CNHM CHFM/CNFM CVVM/CNVM

50Hz						60Hz						Nomenclature				Page of Dimension Sheet		
Output Speed n_2 [r/min]	Output Torque Tout [N·m]	[kgf·m]	Allowable Radial Load Pro [N]	[kgf]	SF	Output Speed n_2 [r/min]	Output Torque Tout [N·m]	[kgf·m]	Allowable Radial Load Pro [N]	[kgf]	SF	Input Capacity Symbol	-	Frame Size	- Reduction Ratio	CNHM CHHM	CNFM CHFM	CNVM CVVM
2.59	6380	650	59000	6010	*1	3.13	6380	650	59000	6010	*1	4	-	6190DA	- 559	B-111	B-128	B-147
	7960	811	59000	6010	*1		7960	811	59000	6010	*1	4	-	6195DA	- 559	B-111	B-128	B-147
	8760	893	84100	8570	*1		8230	839	84100	8570	*1	4	-	6205DA	- 559	B-112	B-129	B-148
	9940	1010	58400	5950	0.80		8240	840	58900	6000	0.97	4	-	6195DA	- 559	B-111	B-128	B-147
			84100	8570	0.88				84100	8570	1.00	4	-	6205DA	- 559	B-112	B-129	B-148
			84100	8570	0.94				84100	8570	1.13	4	-	6205DB	- 559	B-112	B-129	B-148
			104000	10600	1.27				104000	10600	1.54	4	-	6215DA	- 559	B-112	B-129	B-148
			145000	14800	1.61				145000	14800	1.94	4	-	6225DA	- 559	B-113	B-130	B-149
			179000	18200	2.06				179000	18200	2.49	4	-	6235DA	- 559	B-114	B-131	B-150
			208000	21200	2.60				208000	21200	3.13	4	-	6245DA	- 559	B-114	B-131	B-150
2.23	7960	811	58100	5930	*1	2.70	7960	811	58100	5930	*1	4	-	6195DA	- 649	B-111	B-128	B-147
	8300	846	84100	8570	*1		7790	794	84100	8570	*1	4	-	6205DA	- 649	B-112	B-129	B-148
	11500	1180	84100	8570	0.81		9560	975	84100	8570	0.97	4	-	6205DB	- 649	B-112	B-129	B-148
			104000	10600	1.10				104000	10600	1.32	4	-	6215DA	- 649	B-112	B-129	B-148
			145000	14800	1.38				145000	14800	1.66	4	-	6225DA	- 649	B-113	B-130	B-149
			179000	18200	1.78				179000	18200	2.14	4	-	6235DA	- 649	B-114	B-131	B-150
			208000	21200	2.24				208000	21200	2.70	4	-	6245DA	- 649	B-114	B-131	B-150
1.98	7960	811	59000	6010	*1	2.39	7960	811	59000	6010	*1	4	-	6195DA	- 731	B-111	B-128	B-147
	9300	948	84100	8570	*1		9060	923	84100	8570	*1	4	-	6205DA	- 731	B-112	B-129	B-148
	13000	1330	104000	10600	0.97		10800	1100	104000	10600	1.17	4	-	6215DA	- 731	B-112	B-129	B-148
			145000	14800	1.23				145000	14800	1.49	4	-	6225DA	- 731	B-113	B-130	B-149
			179000	18200	1.58				179000	18200	1.90	4	-	6235DA	- 731	B-114	B-131	B-150
			208000	21200	1.98				208000	21200	2.40	4	-	6245DA	- 731	B-114	B-131	B-150
1.72	9230	941	84100	8570	*1	2.08	9230	941	84100	8570	*1	4	-	6205DA	- 841	B-112	B-129	B-148
	15000	1520	104000	10600	0.85		12400	1260	104000	10600	1.02	4	-	6215DA	- 841	B-112	B-129	B-148
			145000	**14800**	**1.01**				**145000**	**14800**	**1.21**	**4**	**-**	**6225DA**	**- 841**	**B-113**	**B-130**	**B-149**
			179000	18200	1.26				179000	18200	1.53	4	-	6235DA	- 841	B-114	B-131	B-150
			208000	21200	1.73				208000	21200	2.08	4	-	6245DA	- 841	B-114	B-131	B-150
1.45	12700	1290	104000	10600	*1	1.74	12700	1290	104000	10600	*1	4	-	6215DA	- 1003	B-112	B-129	B-148
	17800	1820	145000	14800	0.89		14800	1510	145000	14800	1.07	4	-	6225DA	- 1003	B-113	B-130	B-149
			179000	18200	1.15				179000	18200	1.39	4	-	6235DA	- 1003	B-114	B-131	B-150
			208000	21200	1.45				208000	21200	1.75	4	-	6245DA	- 1003	B-114	B-131	B-150
1.16	16000	1630	145000	14800	*1	1.40	16000	1630	145000	14800	*1	4	-	6225DA	- 1247	B-113	B-130	B-149
	22200	2260	179000	18200	0.92		18400	1870	179000	18200	1.12	4	-	6235DA	- 1247	B-114	B-131	B-150
			208000	21200	1.16				208000	21200	1.40	4	-	6245DA	- 1247	B-114	B-131	B-150
0.980	17200	1750	179000	18200	*1	1.18	17200	1750	179000	18200	*1	4	-	6235DA	- 1479	B-114	B-131	B-150
	26300	2680	208000	21200	0.86		21800	2220	208000	21200	1.04	4	-	6245DA	- 1479	B-114	B-131	B-150
0.784	20500	2090	179000	18200	*1	0.946	20500	2090	179000	18200	*1	4	-	6235DA	- 1849	B-114	B-131	B-150
	25800	2630	208000	21200	*1		25800	2630	208000	21200	*1	4	-	6245DA	- 1849	B-114	B-131	B-150
0.702	25800	2630	208000	21200	*1	0.847	25800	2630	208000	21200	*1	4	-	6245DA	- 2065	B-114	B-131	B-150

1. Combinations in **bold** are the recommended models for operations for 10 hours/day with uniform load (service factor is about 1.0 for motor rating at 50Hz).
2. Motor slippage may affect n_1 and n_2. Refer to technical data for details.
3. CNHM, CHHM, CNFM, CHFM, CNVM, and CVVM indicate types. Refer to page B-10 for details.
4. Lubrication method is different for each model. Refer to "Lubrication" section in page F-4~F-5 for details.
5. "6" at the end of "input capacity symbol" indicates models with 6P motor. Other models come with 4P motor.

Selection Tables Gearmotors

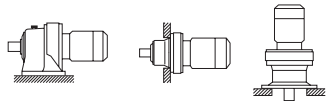

CHHM/CNHM CHFM/CNFM CVVM/CNVM

3.7 kW

n_1: Motor Speed

Hz	50Hz		60Hz	
P	4	6	4	6
n_1 r/min	1450	980	1750	1165

50Hz						60Hz						Nomenclature				Page of Dimension Sheet		
Output Speed n_2 [r/min]	Output Torque Tout [N·m]	Output Torque Tout [kgf·m]	Allowable Radial Load Pro [N]	Allowable Radial Load Pro [kgf]	SF	Output Speed n_2 [r/min]	Output Torque Tout [N·m]	Output Torque Tout [kgf·m]	Allowable Radial Load Pro [N]	Allowable Radial Load Pro [kgf]	SF	Input Capacity Symbol	Frame Size	Reduction Ratio		CNHM CHHM	CNFM CHFM	CNVM CVVM
			1820	**186**	**1.01**				**1790**	**182**	**1.01**	**5 -**	**6105SK**	**- 2.5 *3**		**B-99**	**-**	**B-134**
580	57.9	5.90	2620	267	1.39	700	48.0	4.89	2500	255	1.39	5 -	6110SK	- 2.5 *3		B-99	-	B-134
			2620	267	1.74				2500	255	1.74	5 -	6115SK	- 2.5 *3		B-99	-	B-134
			1850	**189**	**1.05**				**1810**	**185**	**1.05**	**5 -**	**6105SK**	**- 3 *3**		**B-99**	**-**	**B-134**
483	69.5	7.08	2770	282	1.43	583	57.5	5.87	2650	270	1.43	5 -	6110SK	- 3 *3		B-99	-	B-134
			2770	282	1.78				2650	270	1.78	5 -	6115SK	- 3 *3		B-99	-	B-134
			1960	**200**	**1.02**				**1940**	**198**	**1.02**	**5 -**	**6105SK**	**- 4 *3**		**B-99**	**-**	**B-134**
363	92.6	9.44	2920	298	1.45	438	76.7	7.82	2820	287	1.45	5 -	6110SK	- 4 *3		B-99	-	B-134
			2920	298	1.81				2820	287	1.81	5 -	6115SK	- 4 *3		B-99	-	B-134
			2010	**205**	**1.00**				**2000**	**204**	**1.00**	**5 -**	**6105SK**	**- 5 *3**		**B-99**	**-**	**B-134**
290	116	11.8	3040	310	1.25	350	95.9	9.78	2930	299	1.25	5 -	6110SK	- 5 *3		B-99	-	B-134
			3040	310	1.56				2930	299	1.56	5 -	6115SK	- 5 *3		B-99	-	B-134
			1960	200	0.85				1970	201	0.85	5 -	6105SK	- 6 *3		B-99	-	B-134
			3160	**322**	**1.14**				**3060**	**312**	**1.14**	**5 -**	**6110SK**	**- 6 *3**		**B-99**	**-**	**B-134**
			3160	322	1.43				3060	312	1.43	5 -	6115SK	- 6 *3		B-99	-	B-134
242	139	14.2	**4580**	**467**	**1.06**	292	115	11.7	**4320**	**440**	**1.06**	**5 -**	**6115**	**- 6**		**B-101**	**B-117**	**B-136**
			5210	531	1.37				4910	500	1.37	5 -	6120	- 6		B-101	B-117	B-136
			5210	531	1.88				4910	500	1.57	5 -	6125	- 6		B-101	B-117	B-136
			6120	624	2.54				5760	587	2.54	5 -	6130	- 6		B-102	B-118	B-137
			3260	**332**	**1.00**				**3190**	**325**	**1.00**	**5 -**	**6110SK**	**- 8 *3**		**B-99**	**-**	**B-134**
			3260	332	1.25				3190	325	1.25	5 -	6115SK	- 8 *3		B-99	-	B-134
181	185	18.9	**5090**	**519**	**1.06**	219	153	15.6	**4800**	**489**	**1.06**	**5 -**	**6115**	**- 8**		**B-101**	**B-117**	**B-136**
			5800	591	1.37				5470	557	1.37	5 -	6120	- 8		B-101	B-117	B-136
			5800	591	1.88				5470	557	1.88	5 -	6125	- 8		B-101	B-117	B-136
			6820	695	2.54				6420	655	2.54	5 -	6130	- 8		B-102	B-118	B-137
145	232	23.6	**3360**	**343**	**1.03**	175	192	19.6	**3330**	**339**	**1.03**	**5 -**	**6115SK**	**- 10 *3**		**B-99**	**-**	**B-134**
			5780	**589**	**1.06**				**5460**	**557**	**1.06**	**5 -**	**6115**	**- 11**		**B-101**	**B-117**	**B-136**
132	255	26.0	6580	670	1.37	159	211	21.5	6200	632	1.37	5 -	6120	- 11		B-101	B-117	B-136
			6580	670	1.60				6200	632	1.60	5 -	6125	- 11		B-101	B-117	B-136
			7770	792	2.54				7320	746	2.54	5 -	6130	- 11		B-102	B-118	B-137
			5960	**608**	**1.05**				**5640**	**574**	**1.05**	**5 -**	**6115**	**- 13**		**B-101**	**B-117**	**B-136**
			6780	691	1.37				6400	652	1.37	5 -	6120	- 13		B-101	B-117	B-136
112	301	30.7	6780	691	1.60	135	249	25.4	6400	652	1.60	5 -	6125	- 13		B-101	B-117	B-136
			8080	824	2.54				7620	776	2.54	5 -	6130	- 13		B-102	B-118	B-137
			8080	824	2.76				7620	776	3.05	5 -	6135	- 13		B-102	B-118	B-137
			6330	**646**	**1.05**				**5990**	**611**	**1.05**	**5 -**	**6115**	**- 15**		**B-101**	**B-117**	**B-136**
			7260	741	1.37				6860	699	1.37	5 -	6120	- 15		B-101	B-117	B-136
96.7	347	35.4	7260	741	1.60	117	288	29.3	6860	699	1.60	5 -	6125	- 15		B-101	B-117	B-136
			8250	841	2.10				7770	792	2.10	5 -	6130	- 15		B-102	B-118	B-137
			8250	841	2.42				7770	792	2.42	5 -	6135	- 15		B-102	B-118	B-137
			6380	**650**	**1.05**				**6040**	**616**	**1.05**	**5 -**	**6115**	**- 17**		**B-101**	**B-117**	**B-136**
			7320	747	1.32				6920	705	1.37	5 -	6120	- 17		B-101	B-117	B-136
85.3	394	40.1	7320	747	1.53	103	326	33.2	6920	705	1.53	5 -	6125	- 17		B-101	B-117	B-136
			8850	902	1.96				8340	850	1.96	5 -	6130	- 17		B-102	B-118	B-137
			8850	902	2.24				8340	850	2.24	5 -	6135	- 17		B-102	B-118	B-137
			13100	1330	2.73				12300	1260	2.73	5 -	6140	- 17		B-102	B-118	B-137
			5010	511	0.84				6350	647	0.84	5 -	6115	- 21		B-101	B-117	B-136
			8010	**816**	**1.07**				**7570**	**772**	**1.07**	**5 -**	**6120**	**- 21**		**B-101**	**B-117**	**B-136**
			8010	816	1.29				7570	772	1.32	5 -	6125	- 21		B-101	B-117	B-136
69.0	486	49.6	9440	962	1.61	83.3	403	41.1	8900	908	1.66	5 -	6130	- 21		B-102	B-118	B-137
			9440	962	1.82				8900	908	2.04	5 -	6135	- 21		B-102	B-118	B-137
			14000	1420	2.34				13200	1350	2.34	5 -	6140	- 21		B-102	B-118	B-137
			14000	1420	2.56				13200	1350	2.97	5 -	6145	- 21		B-102	B-118	B-137

6. "*2" indicate models manufactured with reducer and motor separately mounted on a common baseplate (horizontal shaft direction) or on an adaptor (vertical shaft direction). Consult us for details, including dimensions.
7. Allowable radial load (Pro) is the value at the midpoint of the slow speed shaft.
8. "*3" indicate models with reduction ratios equal to nominal ratio. Refer to Table A-3 "6000 SK Series (Actual Reduction Ratio)" on page A-4 for actual reduction ratio. Indicated reduction ratio is the same as actual reduction ratio for other models.
9. Maintain torque load during operation within "Output torque" in the table for models with "*1" in the SF column. They cannot be operated with 100% motor rating.

Selection Tables Gearmotors

n_1: Motor Speed

3.7 kW	Hz		50Hz		60Hz	
	P		4	6	4	6
	n_1	r/min	1450	980	1750	1165

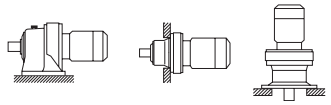

50Hz						60Hz						Nomenclature				Page of Dimension Sheet		
Output Speed n_2 [r/min]	Output Torque Tout [N·m]	[kgf·m]	Allowable Radial Load Pro [N]	[kgf]	SF	Output Speed n_2 [r/min]	Output Torque Tout [N·m]	[kgf·m]	Allowable Radial Load Pro [N]	[kgf]	SF	Input Capacity Symbol	-	Frame Size	- Reduction Ratio	CNHM CHHM	CNFM CHFM	CNVM CVVM
			8350	**851**	**1.07**				**7900**	**806**	**1.07**	**5**	**-**	**6125**	**- 25**	**B-101**	**B-117**	**B-136**
			9790	998	1.35				9240	942	1.39	5	-	6130	- 25	B-102	B-118	B-137
			9790	998	1.55				9240	942	1.61	5	-	6135	- 25	B-102	B-118	B-137
58.0	579	59.0	14600	1490	1.86	70.0	480	48.9	13800	1410	1.86	5	-	6140	- 25	B-102	B-118	B-137
			14600	1490	2.14				13800	1410	2.14	5	-	6145	- 25	B-102	B-118	B-137
			17200	1760	2.66				16200	1650	2.66	5	-	6160	- 25	B-103	B-119	B-138
			8640	880	0.94				8180	834	1.02	5	-	6125	- 29	B-101	B-117	B-136
			10300	**1050**	**1.16**				**9700**	**989**	**1.21**	**5**	**-**	**6130**	**- 29**	**B-102**	**B-118**	**B-137**
			10300	1050	1.32				9700	989	1.52	5	-	6135	- 29	B-102	B-118	B-137
50.0	671	68.4	14900	1520	1.61	60.3	556	56.7	14200	1440	1.61	5	-	6140	- 29	B-102	B-118	B-137
			14900	1520	2.04				14200	1440	2.04	5	-	6145	- 29	B-102	B-118	B-137
			18000	1830	2.58				16900	1730	2.84	5	-	6160	- 29	B-103	B-119	B-138
			10800	**1100**	**1.11**				**10200**	**1040**	**1.15**	**5**	**-**	**6135**	**- 35**	**B-102**	**B-118**	**B-137**
			16000	1630	1.41				15100	1540	1.41	5	-	6140	- 35	B-102	B-118	B-137
41.4	810	82.6	16000	1630	1.69	50.0	671	68.4	15100	1540	2.04	5	-	6145	- 35	B-102	B-118	B-137
			19100	1940	2.16				17900	1830	2.61	5	-	6160	- 35	B-103	B-119	B-138
			19100	1940	2.59				17900	1830	3.08	5	-	6165	- 35	B-103	B-119	B-138
			11500	1170	0.91				10900	1110	1.02	5	-	6135	- 43	B-102	B-118	B-137
			16000	**1630**	**1.06**				**15800**	**1610**	**1.06**	**5**	**-**	**6140**	**- 43**	**B-102**	**B-118**	**B-137**
			16000	1630	1.26				15800	1610	1.46	5	-	6145	- 43	B-102	B-118	B-137
33.7	995	101	20300	2070	1.74	40.7	825	84.1	19200	1950	2.01	5	-	6160	- 43	B-103	B-119	B-138
			20300	2070	2.11				19200	1950	2.14	5	-	6165	- 43	B-103	B-119	B-138
			23000	2350	2.45				21700	2210	2.64	5	-	6170	- 43	B-103	B-119	B-138
			16000	**1630**	**1.00**				**16000**	**1630**	**1.14**	**5**	**-**	**6145**	**- 51**	**B-102**	**B-118**	**B-137**
			21100	2150	1.49				19900	2030	1.55	5	-	6160	- 51	B-103	B-119	B-138
28.4	1180	120	21100	2150	1.78	34.3	978	99.7	19900	2030	2.04	5	-	6165	- 51	B-103	B-119	B-138
			24000	2440	2.07				22600	2300	2.27	5	-	6170	- 51	B-103	B-119	B-138
			24000	2440	2.67				22600	2300	3.05	5	-	6175	- 51	B-103	B-119	B-138
			16000	1630	0.86				16000	1630	0.98	5	-	6145	- 59	B-102	B-118	B-137
			22100	**2250**	**1.19**				**22100**	**2250**	**1.19**	**5**	**-**	**6160**	**- 59**	**B-103**	**B-119**	**B-138**
			22100	2250	1.54				22100	2250	1.55	5	-	6165	- 59	B-103	B-119	B-138
24.6	1370	139	25100	2560	1.79	29.7	1130	115	23700	2410	1.93	5	-	6170	- 59	B-103	B-119	B-138
			25100	2560	2.24				23700	2410	2.24	5	-	6175	- 59	B-103	B-119	B-138
			33600	3430	2.64				31600	3220	2.64	5	-	6180	- 59	B-104	B-120	B-139
			22100	2250	1.28				21900	2240	1.53	5	-	6165	- 71	B-103	B-119	B-138
			26500	2710	1.49				25000	2550	1.60	5	-	6170	- 71	B-103	B-119	B-138
20.4	1640	168	26500	2710	1.89	24.6	1360	139	25000	2550	1.93	5	-	6175	- 71	B-103	B-119	B-138
			35700	3640	2.38				33600	3430	2.38	5	-	6180	- 71	B-104	B-120	B-139
			35700	3640	2.65				33600	3430	2.65	5	-	6185	- 71	B-104	B-120	B-139
			21800	**2230**	**1.02**				**21800**	**2220**	**1.05**	**5**	**-**	**6165**	**- 87**	**B-103**	**B-119**	**B-138**
			28400	2890	1.24				26800	2730	1.30	5	-	6170	- 87	B-103	B-119	B-138
16.7	2010	205	28400	2890	1.52	20.1	1670	170	26800	2730	1.52	5	-	6175	- 87	B-103	B-119	B-138
			38400	3920	1.93				36200	3690	1.93	5	-	6180	- 87	B-104	B-120	B-139
			38400	3920	2.32				36200	3690	2.32	5	-	6185	- 87	B-104	B-120	B-139
	1760	179	22100	2250	*1		1760	179	22100	2250	*1	5	-	6160DC	- 104	B-111	B-127	B-146
			22100	2250	0.92				22100	2250	1.11	5	-	6165DC	- 104	B-111	B-127	B-146
			29500	3010	1.11				29000	2960	1.34	5	-	6170DC	- 104	B-111	B-127	B-146
13.9	2280	233	29500	3010	1.38	16.8	1890	193	29000	2960	1.67	5	-	6175DC	- 104	B-111	B-127	B-146
			40900	4170	1.78				38500	3930	2.15	5	-	6180DB	- 104	B-111	B-127	B-146
			40900	4170	2.15				38500	3930	2.59	5	-	6185DB	- 104	B-111	B-127	B-146
			57200	5830	2.80				53800	5490	3.22	5	-	6190DB	- 104	B-112	B-128	B-147

1. Combinations in **bold** are the recommended models for operations for 10 hours/day with uniform load (service factor is about 1.0 for motor rating at 50Hz).
2. Motor slippage may affect n_1 and n_2. Refer to technical data for details.
3. CNHM, CHHM, CNFM, CHFM, CNVM, and CVVM indicate types. Refer to page B-10 for details.
4. Lubrication method is different for each model. Refer to "Lubrication" section in page F-4~F-5 for details.
5. "6" at the end of "input capacity symbol" indicates models with 6P motor. Other models come with 4P motor.

Selection Tables Gearmotors

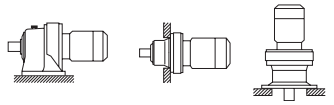

CHHM/CNHM CHFM/CNFM CVVM/CNVM

3.7 kW

n_1: Motor Speed

Hz	50Hz		60Hz	
P	4	6	4	6
n_1 r/min	1450	980	1750	1165

50Hz						60Hz						Nomenclature	Page of Dimension Sheet		
Output Speed n_2 [r/min]	Output Torque Tout [N·m]	[kgf·m]	Allowable Radial Load Pro [N]	[kgf]	SF	Output Speed n_2 [r/min]	Output Torque Tout [N·m]	[kgf·m]	Allowable Radial Load Pro [N]	[kgf]	SF	Input Capacity Symbol - Frame Size - Reduction Ratio	CNHM CHHM	CNFM CHFM	CNVM CVVM
12.0	2100	214	22100	2250	*1	14.5	2100	214	22100	2250	*1	5 - 6165DC - 121	B-111	B-127	B-146
	2650	271	29500	3010	1.19		2200	224	29500	3010	1.43	5 - 6175DC - 121	B-111	B-127	B-146
			41700	4250	1.53				41000	4180	1.85	5 - 6180DB - 121	B-111	B-127	B-146
			41700	4250	1.81				41000	4180	2.19	5 - 6185DB - 121	B-111	B-127	B-146
			59000	6010	2.40				57300	5840	2.90	5 - 6190DB - 121	B-112	B-128	B-147
			59000	6010	2.86				57300	5840	3.22	5 - 6195DB - 121	B-112	B-128	B-147
10.1	2530	258	29500	3010	*1	12.2	2530	258	29500	3010	*1	5 - 6170DC - 143	B-111	B-127	B-146
	3140	320	**29500**	**3010**	**1.00**		2600	265	**29500**	**3010**	**1.21**	**5 - 6175DC - 143**	**B-111**	**B-127**	**B-146**
			41700	4250	1.29				41700	4250	1.56	5 - 6180DB - 143	B-111	B-127	B-146
			41700	4250	1.56				41700	4250	1.89	5 - 6185DB - 143	B-111	B-127	B-146
			59000	6010	1.69				59000	6010	1.69	5 - 6190DA - 143	B-111	B-128	B-147
			59000	6010	2.03				59000	6010	2.46	5 - 6190DB - 143	B-112	B-128	B-147
			59000	6010	2.43				59000	6010	2.94	5 - 6195DB - 143	B-112	B-128	B-147
8.79	2530	258	29500	3010	*1	10.6	2530	258	29500	3010	*1	5 - 6170DC - 165	B-111	B-127	B-146
	3620	369	29500	3010	0.87		3000	306	29500	3010	1.05	5 - 6175DC - 165	B-111	B-127	B-146
			41700	4250	1.12				41700	4250	1.35	5 - 6180DB - 165	B-111	B-127	B-146
			41700	4250	1.36				41700	4250	1.64	5 - 6185DB - 165	B-111	B-127	B-146
			59000	6010	1.69				59000	6010	1.69	5 - 6190DA - 165	B-111	B-128	B-147
			59000	6010	1.76				59000	6010	2.13	5 - 6190DB - 165	B-112	B-128	B-147
			59000	6010	2.19				59000	6010	2.64	5 - 6195DB - 165	B-112	B-128	B-147
			84100	8570	2.56				84100	8570	3.09	5 - 6205DB - 165	B-112	B-129	B-148
7.44	3150	321	29500	3010	*1	8.97	3150	321	29500	3010	*1	5 - 6175DC - 195	B-111	B-127	B-146
	4280	436	41700	4250	1.15		3540	361	41700	4250	1.39	5 - 6185DB - 195	B-111	B-127	B-146
			59000	6010	1.49				59000	6010	1.69	5 - 6190DA - 195	B-111	B-128	B-147
			59000	6010	1.49				59000	6010	1.80	5 - 6190DB - 195	B-112	B-128	B-147
			59000	6010	1.52				59000	6010	1.69	5 - 6195DA - 195	B-111	B-128	B-147
			59000	6010	1.85				59000	6010	2.23	5 - 6195DB - 195	B-112	B-128	B-147
			84100	8570	2.17				84100	8570	2.62	5 - 6205DB - 195	B-112	B-129	B-148
			104000	10600	2.85				104000	10600	3.22	5 - 6215DA - 195	B-112	B-129	B-148
			104000	10600	2.85				104000	10600	3.43	5 - 6215DB - 195	B-113	B-130	B-149
			131000	13400	2.92				124000	12600	3.22	5 - 6225DA - 195	B-113	B-130	B-149
6.28	4050	413	41700	4250	*1	7.58	4050	413	41700	4250	*1	5 - 6180DB - 231	B-111	B-127	B-146
	5070	516	41700	4250	0.98		4200	428	41700	4250	1.19	5 - 6185DB - 231	B-111	B-127	B-146
			59000	6010	1.26				59000	6010	1.52	5 - 6190DA - 231	B-111	B-128	B-147
			59000	6010	1.57				59000	6010	1.69	5 - 6195DA - 231	B-111	B-128	B-147
			59000	6010	1.57				59000	6010	1.90	5 - 6195DB - 231	B-112	B-128	B-147
			84100	8570	1.83				84100	8570	2.21	5 - 6205DB - 231	B-112	B-129	B-148
			104000	10600	2.47				104000	10600	2.98	5 - 6215DA - 231	B-112	B-129	B-148
			140000	14200	2.92				132000	13500	3.22	5 - 6225DA - 231	B-113	B-130	B-149
			140000	14200	2.92				132000	13500	3.53	5 - 6225DB - 231	B-113	B-130	B-149

6. "*2" indicate models manufactured with reducer and motor separately mounted on a common baseplate (horizontal shaft direction) or on an adaptor (vertical shaft direction). Consult us for details, including dimensions.
7. Allowable radial load (Pro) is the value at the midpoint of the slow speed shaft.
8. "*3" indicate models with reduction ratios equal to nominal ratio. Refer to Table A-3 "6000SK Series (Actual Reduction Ratio)" on page A-4 for actual reduction ratio. Indicated reduction ratio is the same as actual reduction ratio for other models.
9. Maintain torque load during operation within "Output torque" in the table for models with "*1" in the SF column. They cannot be operated with 100% motor rating.

Selection Tables Gearmotors

n1: Motor Speed

3.7 kW	Hz	50Hz		60Hz	
	P	4	6	4	6
	n_1 r/min	1450	980	1750	1165

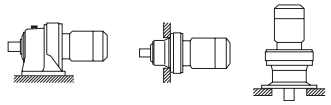

CHHM/CNHM CHFM/CNFM CVVM/CNVM

50Hz						60Hz						Nomenclature	Page of Dimension Sheet		
Output Speed n_2 [r/min]	Output Torque Tout [N·m]	[kgf·m]	Allowable Radial Load Pro [N]	[kgf]	SF	Output Speed n_2 [r/min]	Output Torque Tout [N·m]	[kgf·m]	Allowable Radial Load Pro [N]	[kgf]	SF	Input Capacity Symbol - Frame Size - Reduction Ratio	CNHM CHHM	CNFM CHFM	CNVM CVVM
5.31	4050	413	41700	4250	*1	6.41	4050	413	41700	4250	*1	5 - 6180DB - 273	B-111	B-127	B-146
	5990	610	41700	4250	0.84		4960	506	41700	4250	1.01	5 - 6185DB - 273	B-111	B-127	B-146
			59000	**6010**	**1.07**				**59000**	**6010**	**1.29**	**5 - 6190DA - 273**	**B-111**	**B-128**	**B-147**
			59000	6010	1.33				59000	6010	1.60	5 - 6195DA - 273	B-111	B-128	B-147
			84100	8570	1.40				84100	8570	1.58	5 - 6205DA - 273	B-112	B-129	B-148
			84100	8570	1.55				84100	8570	1.87	5 - 6205DB - 273	B-112	B-129	B-148
			104000	10600	2.09				104000	10600	2.52	5 - 6215DA - 273	B-112	B-129	B-148
			145000	14800	2.47				139000	14100	2.98	5 - 6225DA - 273	B-113	B-130	B-149
4.55	5000	510	41700	4250	*1	5.49	5000	510	41700	4250	*1	5 - 6185DB - 319	B-111	B-127	B-146
	7000	713	59000	6010	1.14		5800	591	59000	6010	1.37	5 - 6195DA - 319	B-111	B-128	B-147
			84100	8570	1.15				84100	8570	1.31	5 - 6205DA - 319	B-112	B-129	B-148
			84100	8570	1.32				84100	8570	1.59	5 - 6205DB - 319	B-112	B-129	B-148
			104000	10600	1.81				104000	10600	2.18	5 - 6215DA - 319	B-112	B-129	B-148
			145000	14800	2.15				144000	14700	2.59	5 - 6225DA - 319	B-113	B-130	B-149
			179000	18200	2.70				179000	18200	3.26	5 - 6235DA - 319	B-114	B-131	B-150
3.85	6380	650	59000	6010	*1	4.64	6380	650	59000	6010	*1	5 - 6190DA - 377	B-111	B-128	B-147
	8270	843	58900	6010	0.96		6850	698	59000	6010	1.16	5 - 6195DA - 377	B-111	B-128	B-147
			84100	**8570**	**1.03**				**84100**	**8570**	**1.17**	**5 - 6205DA - 377**	**B-112**	**B-129**	**B-148**
			84100	8570	1.12				84100	8570	1.35	5 - 6205DB - 377	B-112	B-129	B-148
			104000	10600	1.53				104000	10600	1.85	5 - 6215DA - 377	B-112	B-129	B-148
			145000	14800	1.82				145000	14800	2.20	5 - 6225DA - 377	B-113	B-130	B-149
			179000	18200	2.29				179000	18200	2.76	5 - 6235DA - 377	B-114	B-131	B-150
3.07	7960	811	59000	6010	*1	3.70	7960	811	59000	6010	*1	5 - 6195DA - 473	B-111	B-128	B-147
	8280	844	84100	8570	*1		7780	793	84100	8570	*1	5 - 6205DA - 473	B-112	B-129	B-148
	10400	1060	84100	8570	0.80		8600	876	84100	8570	0.90	5 - 6205DA - 473	B-112	B-129	B-148
			84100	8570	0.90				84100	8570	1.08	5 - 6205DB - 473	B-112	B-129	B-148
			104000	10600	1.22				104000	10600	1.47	5 - 6215DA - 473	B-112	B-129	B-148
			145000	14800	1.54				145000	14800	1.86	5 - 6225DA - 473	B-113	B-130	B-149
			179000	18200	1.98				179000	18200	2.38	5 - 6235DA - 473	B-114	B-131	B-150
			208000	21200	2.49				208000	21200	3.00	5 - 6245DA - 473	B-114	B-131	B-150
2.59	12300	1250	**104000**	**10600**	**1.03**	3.13	10200	1040	**104000**	**10600**	**1.25**	**5 - 6215DA - 559**	**B-112**	**B-129**	**B-148**
			145000	14800	1.31				145000	14800	1.58	5 - 6225DA - 559	B-113	B-130	B-149
			179000	18200	1.67				179000	18200	2.02	5 - 6235DA - 559	B-114	B-131	B-150
			208000	21200	2.10				208000	21200	2.54	5 - 6245DA - 559	B-114	B-131	B-150
			258000	26300	2.81				258000	26300	3.40	5 - 6255DA - 559	B-115	B-132	B-151
2.23	14200	1450	104000	10600	0.89	2.70	11800	1200	104000	10600	1.07	5 - 6215DA - 649	B-112	B-129	B-148
			145000	14800	1.12				145000	14800	1.35	5 - 6225DA - 649	B-113	B-130	B-149
			179000	18200	1.44				179000	18200	1.74	5 - 6235DA - 649	B-114	B-131	B-150
			208000	21200	1.81				208000	21200	2.19	5 - 6245DA - 649	B-114	B-131	B-150
			258000	26300	2.42				258000	26300	2.93	5 - 6255DA - 649	B-115	B-132	B-151
1.98	12700	1290	104000	10600	*1	2.39	12700	1290	104000	10600	*1	5 - 6215DA - 731	B-112	B-129	B-148
	16000	1630	**145000**	**14800**	**1.00**		13300	1350	**145000**	**14800**	**1.20**	**5 - 6225DA - 731**	**B-113**	**B-130**	**B-149**
			179000	18200	1.28				179000	18200	1.54	5 - 6235DA - 731	B-114	B-131	B-150
			208000	21200	1.61				208000	21200	1.94	5 - 6245DA - 731	B-114	B-131	B-150
			258000	26300	2.15				258000	26300	2.60	5 - 6255DA - 731	B-115	B-132	B-151
1.72	12700	1290	104000	10600	*1	2.08	12700	1290	104000	10600	*1	5 - 6215DA - 841	B-112	B-129	B-148
	15000	1530	145000	14800	*1		15000	1530	145000	14800	*1	5 - 6225DA - 841	B-113	B-130	B-149
	18400	1880	145000	14800	0.82		15300	1560	145000	14800	0.98	5 - 6225DA - 841	B-113	B-130	B-149
			179000	**18200**	**1.02**				**179000**	**18200**	**1.24**	**5 - 6235DA - 841**	**B-114**	**B-131**	**B-150**
			208000	21200	1.40				208000	21200	1.69	5 - 6245DA - 841	B-114	B-131	B-150
			258000	26300	1.76				258000	26300	2.13	5 - 6255DA - 841	B-115	B-132	B-151
1.45	15900	1620	145000	14800	*1	1.74	15900	1620	145000	14800	*1	5 - 6225DA - 1003	B-113	B-130	B-149
	22000	2240	179000	18200	0.93		18200	1860	179000	18200	1.12	5 - 6235DA - 1003	B-114	B-131	B-150
			208000	21200	1.17				208000	21200	1.42	5 - 6245DA - 1003	B-114	B-131	B-150
			258000	26300	1.57				258000	26300	1.89	5 - 6255DA - 1003	B-115	B-132	B-151

1. Combinations in **bold** are the recommended models for operations for 10 hours/day with uniform load (service factor is about 1.0 for motor rating at 50Hz).
2. Motor slippage may affect n_1 and n_2. Refer to technical data for details.
3. CNHM, CHHM, CNFM, CHFM, CNVM, and CVVM indicate types. Refer to page B-10 for details.
4. Lubrication method is different for each model. Refer to "Lubrication" section in page F-4~F-5 for details.
5. "6" at the end of "input capacity symbol" indicates models with 6P motor. Other models come with 4P motor.

Selection Tables Gearmotors

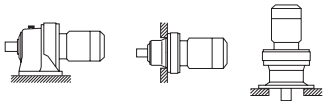

CHHM/CNHM CHFM/CNFM CVVM/CNVM

n_1: Motor Speed

3.7 kW	Hz	50Hz		60Hz	
	P	4	6	4	6
	n_1 r/min	1450	980	1750	1165

50Hz						60Hz						Nomenclature	Page of Dimension Sheet		
Output Speed n_2 [r/min]	Output Torque Tout [N·m]	[kgf·m]	Allowable Radial Load Pro [N]	[kgf]	SF	Output Speed n_2 [r/min]	Output Torque Tout [N·m]	[kgf·m]	Allowable Radial Load Pro [N]	[kgf]	SF	Input Capacity Symbol - Frame Size - Reduction Ratio	CNHM CHHM	CNFM CHFM	CNVM CVVM
1.16	20500	2090	179000	18200	*1	1.40	20500	2090	179000	18200	*1	5 - 6235DA - 1247	B-114	B-131	B-150
	27300	2790	208000	21200	0.94		22700	2310	208000	21200	1.14	5 - 6245DA - 1247	B-114	B-131	B-150
			258000	26300	1.26				258000	26300	1.52	5 - 6255DA - 1247	B-115	B-132	B-151
0.980	22600	2310	208000	21200	*1	1.18	22600	2310	208000	21200	*1	5 - 6245DA - 1479	B-114	B-131	B-150
	32400	3310	258000	26300	0.96		26900	2740	258000	26300	1.15	5 - 6255DA - 1479	B-115	B-132	B-151
0.784	40600	4130	258000	26300	0.85	0.946	33600	3430	258000	26300	1.03	5 - 6255DA - 1849	B-115	B-132	B-151
0.702	34500	3520	258000	26300	*1	0.847	34500	3520	258000	26300	*1	5 - 6255DA - 2065	B-115	B-132	B-151
0.572	34500	3520	258000	26300	*1	0.690	34500	3520	258000	26300	*1	5 - 6255DA - 2537	B-115	B-132	B-151
0.476	31000	3160	258000	26300	*1	0.575	31000	3160	258000	26300	*1	5 - 6255DA - 3045	B-115	B-132	B-151
0.417	34500	3520	258000	26300	*1	0.503	34500	3520	258000	26300	*1	5 - 6255DA - 3481	B-115	B-132	B-151
0.327	31000	3160	258000	26300	*1	0.394	31000	3160	258000	26300	*1	5 - 6255DA - 4437	B-115	B-132	B-151
0.282	34500	3520	258000	26300	*1	0.341	34500	3520	258000	26300	*1	5 - 6255DA - 5133	B-115	B-132	B-151
0.235	31000	3160	258000	26300	*1	0.283	31000	3160	258000	26300	*1	5 - 6255DA - 6177	B-115	B-132	B-151
0.192	31000	3160	258000	26300	*1	0.231	31000	3160	258000	26300	*1	5 - 6255DA - 7569	B-115	B-132	B-151

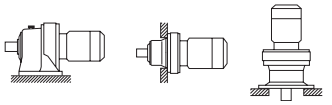

CHHM/CNHM CHFM/CNFM CVVM/CNVM

n_1: Motor Speed

5.5 kW	Hz	50Hz		60Hz	
	P	4	6	4	6
	n_1 r/min	1450	980	1750	1165

50Hz						60Hz						Nomenclature	Page of Dimension Sheet		
Output Speed n_2 [r/min]	Output Torque Tout [N·m]	[kgf·m]	Allowable Radial Load Pro [N]	[kgf]	SF	Output Speed n_2 [r/min]	Output Torque Tout [N·m]	[kgf·m]	Allowable Radial Load Pro [N]	[kgf]	SF	Input Capacity Symbol - Frame Size - Reduction Ratio	CNHM CHHM	CNFM CHFM	CNVM CVVM
580	86.0	8.77	**2410**	**246**	**1.17**	700	71.3	7.27	**2330**	**238**	**1.17**	**8 - 6115SK - 2.5 *3**	**B-99**	**-**	**B-134**
483	103	10.5	**2530**	**258**	**1.20**	583	85.5	8.72	**2450**	**250**	**1.20**	**8 - 6115SK - 3 *3**	**B-99**	**-**	**B-134**
363	138	14.0	**2640**	**269**	**1.22**	11.6	2580	263	**2580**	**263**	**1.22**	**8 - 6115SK - 4 *3**	**B-99**	**-**	**B-134**
290	172	17.5	**2690**	**274**	**1.05**	350	143	14.5	**2640**	**269**	**1.05**	**8 - 6115SK - 5 *3**	**B-99**	**-**	**B-134**
242	206	21.0	2710	276	0.96	292	171	17.4	2700	275	0.96	8 - 6115SK - 6 *3	B-99	-	B-134
			5140	**524**	**1.27**				**4850**	**494**	**1.06**	**8 - 6125 - 6**	**B-101**	**B-117**	**B-136**
			6060	617	1.71				5710	582	1.71	8 - 6130 - 6	B-102	B-118	B-137
			6060	617	2.05				5710	582	2.05	8 - 6135 - 6	B-102	B-118	B-137
			9370	955	2.36				8860	903	2.36	8 - 6140 - 6	B-102	B-118	B-137
			9370	955	2.75				8860	903	2.75	8 - 6145 - 6	B-102	B-118	B-137
181	275	28.1	2680	273	0.84	219	228	23.3	2710	276	0.84	8 - 6115SK - 8 *3	B-99	-	B-134
			5710	**582**	**1.26**				**5400**	**550**	**1.26**	**8 - 6125 - 8**	**B-101**	**B-117**	**B-136**
			6740	687	1.71				6360	648	1.71	8 - 6130 - 8	B-102	B-118	B-137
			6740	687	2.05				6360	648	2.05	8 - 6135 - 8	B-102	B-118	B-137
			10400	1060	2.36				9820	1000	2.36	8 - 6140 - 8	B-102	B-118	B-137
			10400	1060	2.75				9820	1000	2.75	8 - 6145 - 8	B-102	B-118	B-137
132	379	38.6	**6450**	**658**	**1.08**	159	314	32.0	**6100**	**622**	**1.08**	**8 - 6125 - 11**	**B-101**	**B-117**	**B-136**
			7680	783	1.71				7240	739	1.71	8 - 6130 - 11	B-102	B-118	B-137
			7680	783	2.05				7240	739	2.05	8 - 6135 - 11	B-102	B-118	B-137
			11600	1190	2.36				11000	1120	2.36	8 - 6140 - 11	B-102	B-118	B-137
			11600	1190	2.75				11000	1120	2.75	8 - 6145 - 11	B-102	B-118	B-137

6. "*2" indicate models manufactured with reducer and motor separately mounted on a common baseplate (horizontal shaft direction) or on an adaptor (vertical shaft direction). Consult us for details, including dimensions.
7. Allowable radial load (Pro) is the value at the midpoint of the slow speed shaft.
8. "*3" indicate models with reduction ratios equal to nominal ratio. Refer to Table A-3 "6000SK Series (Actual Reduction Ratio)" on page A-4 for actual reduction ratio. Indicated reduction ratio is the same as actual reduction ratio for other models.
9. Maintain torque load during operation within "Output torque" in the table for models with "*1" in the SF column. They cannot be operated with 100% motor rating.

Selection Tables Gearmotors

n_1: Motor Speed

5.5 kW	Hz		50Hz		60Hz	
	P		4	6	4	6
	n_1	r/min	1450	980	1750	1165

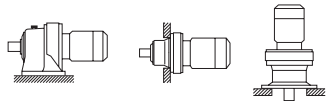

CHHM/CNHM CHFM/CNFM CVVM/CNVM

50Hz						60Hz						Nomenclature				Page of Dimension Sheet		
Output Speed n_2 [r/min]	Output Torque Tout [N·m]	[kgf·m]	Allowable Radial Load Pro [N]	[kgf]	SF	Output Speed n_2 [r/min]	Output Torque Tout [N·m]	[kgf·m]	Allowable Radial Load Pro [N]	[kgf]	SF	Input Capacity Symbol	-	Frame Size	- Reduction Ratio	CNHM CHHM	CNFM CHFM	CNVM CVVM
			6630	**676**	**1.08**				**6280**	**640**	**1.08**	**8**	**-**	**6125**	**- 13**	**B-101**	**B-117**	**B-136**
			7980	814	1.71				7530	768	1.71	8	-	6130	- 13	B-102	B-118	B-137
112	447	45.6	7980	814	1.85	135	371	37.8	7530	768	2.05	8	-	6135	- 13	B-102	B-118	B-137
			11900	1210	2.36				11300	1150	2.36	8	-	6140	- 13	B-102	B-118	B-137
			11900	1210	2.75				11300	1150	2.75	8	-	6145	- 13	B-102	B-118	B-137
			7100	**724**	**1.08**				**6730**	**686**	**1.08**	**8**	**-**	**6125**	**- 15**	**B-101**	**B-117**	**B-136**
			8130	829	1.41				7680	783	1.41	8	-	6130	- 15	B-102	B-118	B-137
96.7	516	52.6	8130	829	1.63	117	428	43.6	7680	783	1.63	8	-	6135	- 15	B-102	B-118	B-137
			12400	1270	2.18				11800	1200	2.18	8	-	6140	- 15	B-102	B-118	B-137
			12400	1270	2.64				11800	1200	2.75	8	-	6145	- 15	B-102	B-118	B-137
			7150	**729**	**1.03**				**6780**	**691**	**1.03**	**8**	**-**	**6125**	**- 17**	**B-101**	**B-117**	**B-136**
			8710	888	1.32				8230	839	1.32	8	-	6130	- 17	B-102	B-118	B-137
			8710	888	1.51				8230	839	1.51	8	-	6135	- 17	B-102	B-118	B-137
85.3	585	59.6	13000	1320	1.84	103	485	49.4	12300	1250	1.84	8	-	6140	- 17	B-102	B-118	B-137
			13000	1320	2.18				12300	1250	2.18	8	-	6145	- 17	B-102	B-118	B-137
			15300	1550	2.38				14400	1460	2.38	8	-	6160	- 17	B-103	B-119	B-138
			7780	793	0.87				7390	753	0.89	8	-	6125	- 21	B-101	B-117	B-136
			9260	**944**	**1.08**				**8760**	**893**	**1.12**	**8**	**-**	**6130**	**- 21**	**B-102**	**B-118**	**B-137**
			9260	944	1.22				8760	893	1.37	8	-	6135	- 21	B-102	B-118	B-137
69.0	723	73.7	13900	1410	1.57	83.3	599	61.0	13100	1340	1.57	8	-	6140	- 21	B-102	B-118	B-137
			13900	1410	1.73				13100	1340	2.00	8	-	6145	- 21	B-102	B-118	B-137
			16400	1670	2.35				15400	1570	2.35	8	-	6160	- 21	B-103	B-119	B-138
			16400	1670	2.91				15400	1570	2.93	8	-	6165	- 21	B-103	B-119	B-138
			9580	**977**	**1.05**				**9070**	**925**	**1.08**	**8**	**-**	**6135**	**- 25**	**B-102**	**B-118**	**B-137**
			14500	1480	1.25				13800	1400	1.25	8	-	6140	- 25	B-102	B-118	B-137
			14500	1480	1.44				13800	1400	1.44	8	-	6145	- 25	B-102	B-118	B-137
58.0	860	87.7	17100	1740	1.79	70.0	713	72.7	16100	1640	1.79	8	-	6160	- 25	B-103	B-119	B-138
			17100	1740	2.44				16100	1640	2.75	8	-	6165	- 25	B-103	B-119	B-138
			19200	1960	2.84				18100	1840	2.87	8	-	6170	- 25	B-103	B-119	B-138
			10000	1020	0.89				9500	968	1.03	8	-	6135	- 29	B-102	B-118	B-137
			14800	**1510**	**1.08**				**14100**	**1430**	**1.08**	**8**	**-**	**6140**	**- 29**	**B-102**	**B-118**	**B-137**
			14800	1510	1.37				14100	1430	1.37	8	-	6145	- 29	B-102	B-118	B-137
50.0	998	102	17800	1810	1.74	60.3	827	84.3	16800	1710	1.91	8	-	6160	- 29	B-103	B-119	B-138
			17800	1810	2.07				16800	1710	2.07	8	-	6165	- 29	B-103	B-119	B-138
			20200	2060	2.45				19100	1940	2.60	8	-	6170	- 29	B-103	B-119	B-138
			15900	1620	1.14				15000	1530	1.37	8	-	6145	- 35	B-102	B-118	B-137
			18800	1920	1.46				17800	1810	1.76	8	-	6160	- 35	B-103	B-119	B-138
41.4	1200	123	18800	1920	1.74	50.0	998	102	17800	1810	2.07	8	-	6165	- 35	B-103	B-119	B-138
			21400	2180	2.04				20200	2060	2.18	8	-	6170	- 35	B-103	B-119	B-138
			21400	2180	2.62				20200	2060	2.75	8	-	6175	- 35	B-103	B-119	B-138
			15100	1540	0.85				15600	1590	0.98	8	-	6145	- 43	B-102	B-118	B-137
			20000	2040	1.17				18900	1930	1.35	8	-	6160	- 43	B-103	B-119	B-138
			20000	2040	1.42				18900	1930	1.44	8	-	6165	- 43	B-103	B-119	B-138
33.7	1480	151	22800	2320	1.65	40.7	1230	125	21500	2190	1.77	8	-	6170	- 43	B-103	B-119	B-138
			22800	2320	2.05				21500	2190	2.05	8	-	6175	- 43	B-103	B-119	B-138
			30900	3150	2.75				29100	2960	2.75	8	-	6180	- 43	B-104	B-120	B-139
			20800	**2120**	**1.00**				**19600**	**2000**	**1.05**	**8**	**-**	**6160**	**- 51**	**B-103**	**B-119**	**B-138**
			20800	2120	1.20				19600	2000	1.37	8	-	6165	- 51	B-103	B-119	B-138
			23700	2420	1.39				22400	2280	1.53	8	-	6170	- 51	B-103	B-119	B-138
28.4	1760	179	23700	2420	1.79	34.3	1450	148	22400	2280	2.05	8	-	6175	- 51	B-103	B-119	B-138
			31900	3260	2.18				30100	3070	2.18	8	-	6180	- 51	B-104	B-120	B-139
			31900	3260	2.75				30100	3070	2.75	8	-	6185	- 51	B-104	B-120	B-139

1. Combinations in **bold** are the recommended models for operations for 10 hours/day with uniform load (service factor is about 1.0 for motor rating at 50Hz).
2. Motor slippage may affect n_1 and n_2. Refer to technical data for details.
3. CNHM, CHHM, CNFM, CHFM, CNVM, and CVVM indicate types. Refer to page B-10 for details.
4. Lubrication method is different for each model. Refer to "Lubrication" section in page F-4~F-5 for details.
5. "6" at the end of "input capacity symbol" indicates models with 6P motor. Other models come with 4P motor.

Selection Tables Gearmotors

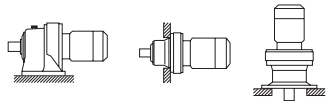

5.5 kW

n_1: Motor Speed

Hz	50Hz		60Hz	
P	4	6	4	6
n_1 r/min	1450	980	1750	1165

50Hz						60Hz						Nomenclature				Page of Dimension Sheet		
Output Speed n_2 [r/min]	Output Torque Tout [N·m]	[kgf·m]	Allowable Radial Load Pro [N]	[kgf]	SF	Output Speed n_2 [r/min]	Output Torque Tout [N·m]	[kgf·m]	Allowable Radial Load Pro [N]	[kgf]	SF	Input Capacity Symbol	- Frame Size	- Reduction Ratio		CNHM CHHM	CNFM CHFM	CNVM CVVM
			22100	**2250**	**1.03**				**21700**	**2220**	**1.05**	**8**	**- 6165**	**- 59**		**B-103**	**B-119**	**B-138**
			24800	2530	1.20				23400	2390	1.30	8	- 6170	- 59		B-103	B-119	B-138
24.6	2030	207	24800	2530	1.51	29.7	1680	171	23400	2390	1.51	8	- 6175	- 59		B-103	B-119	B-138
			33400	3400	1.77				31400	3200	1.77	8	- 6180	- 59		B-104	B-120	B-139
			33400	3400	2.18				31400	3200	2.18	8	- 6185	- 59		B-104	B-120	B-139
			47000	4790	2.78				44200	4500	2.78	8	- 6190	- 59		B-104	B-120	B-139
			22100	2250	0.86				21600	2200	1.03	8	- 6165	- 71		B-103	B-119	B-138
			26200	**2670**	**1.00**				**24700**	**2520**	**1.08**	**8**	**- 6170**	**- 71**		**B-103**	**B-119**	**B-138**
			26200	2670	1.27				24700	2520	1.30	8	- 6175	- 71		B-103	B-119	B-138
20.4	2440	249	35500	3620	1.60	24.6	2020	206	33400	3410	1.60	8	- 6180	- 71		B-104	B-120	B-139
			35500	3620	1.78				33400	3410	1.78	8	- 6185	- 71		B-104	B-120	B-139
			49800	5080	2.45				46900	4780	2.45	8	- 6190	- 71		B-104	B-120	B-139
			49800	5080	2.84				46900	4780	2.84	8	- 6195	- 71		B-104	B-120	B-139
			27900	**2840**	**1.02**				**26400**	**2690**	**1.02**	**8**	**- 6175**	**- 87**		**B-103**	**B-119**	**B-138**
			38100	3880	1.30				35900	3660	1.30	8	- 6180	- 87		B-104	B-120	B-139
16.7	2990	305	38100	3880	1.56	20.1	2480	253	35900	3660	1.56	8	- 6185	- 87		B-104	B-120	B-139
			53600	5470	2.13				50500	5140	2.15	8	- 6190	- 87		B-104	B-120	B-139
			53600	5470	2.47				50500	5140	2.47	8	- 6195	- 87		B-104	B-120	B-139
	2100	214	22100	2250	*1		2100	214	22100	2250	*1	8	- 6165DC	- 104		B-111	B-127	B-146
	2530	258	29500	3010	*1		2530	258	28600	2920	*1	8	- 6170DC	- 104		B-111	B-127	B-146
			29500	3010	0.93				28500	2900	1.12	8	- 6175DC	- 104		B-111	B-127	B-146
13.9			40500	4130	1.20	16.8			38200	3890	1.45	8	- 6180DB	- 104		B-111	B-127	B-146
	3390	346	40500	4130	1.45		2810	286	38200	3890	1.74	8	- 6185DB	- 104		B-111	B-127	B-146
			56800	5790	1.88				53500	5460	2.17	8	- 6190DB	- 104		B-112	B-128	B-147
			56800	5790	2.17				53500	5460	2.17	8	- 6195DB	- 104		B-112	B-128	B-147
	2530	258	29500	3010	*1		2530	258	29500	3010	*1	8	- 6170DC	- 121		B-111	B-127	B-146
	3150	321	29500	3010	*1		3150	321	29500	3010	*1	8	- 6175DC	- 121		B-111	B-127	B-146
			29500	3010	0.80				29500	3010	0.96	8	- 6175DC	- 121		B-111	B-127	B-146
			41700	**4250**	**1.03**				**40600**	**4140**	**1.24**	**8**	**- 6180DB**	**- 121**		**B-111**	**B-127**	**B-146**
12.0			41700	4250	1.22	14.5			40600	4140	1.47	8	- 6185DB	- 121		B-111	B-127	B-146
	3940	402	59000	6010	1.62		3270	333	57000	5810	1.95	8	- 6190DB	- 121		B-112	B-128	B-147
			59000	6010	1.92				57000	5810	2.17	8	- 6195DB	- 121		B-112	B-128	B-147
			84100	8570	2.17				84100	8570	2.17	8	- 6205DB	- 121		B-112	B-129	B-148
			104000	10600	2.88				103000	10500	3.48	8	- 6215DB	- 121		B-113	B-130	B-149
	3150	321	29500	3010	*1		3150	321	29500	3010	*1	8	- 6175DC	- 143		B-111	B-127	B-146
			41700	**4250**	**1.05**				**41700**	**4250**	**1.27**	**8**	**- 6185DB**	**- 143**		**B-111**	**B-127**	**B-146**
10.1	4660	475	59000	6010	1.14	12.2	3860	394	59000	6010	1.14	8	- 6190DA	- 143		B-111	B-128	B-147
			59000	6010	1.37				59000	6010	1.65	8	- 6190DB	- 143		B-112	B-128	B-147
			59000	6010	1.64				59000	6010	1.97	8	- 6195DB	- 143		B-112	B-128	B-147
	3150	321	29500	3010	*1		3150	321	29500	3010	*1	8	- 6175DC	- 165		B-111	B-127	B-146
	4060	414	41700	4250	*1		4060	414	**41700**	4250	*1	8	- 6180DB	- 165		B-111	B-127	B-146
			41700	4250	0.92				41700	4250	1.10	8	- 6185DB	- 165		B-111	B-127	B-146
			59000	**6010**	**1.14**				**59000**	**6010**	**1.14**	**8**	**- 6190DA**	**- 165**		**B-111**	**B-128**	**B-147**
8.79			59000	6010	1.19	10.6			59000	6010	1.43	8	- 6190DB	- 165		B-112	B-128	B-147
	5380	548	59000	6010	1.47		4460	454	59000	6010	1.77	8	- 6195DB	- 165		B-112	B-128	B-147
			84100	8570	1.72				84100	8570	2.08	8	- 6205DB	- 165		B-112	B-129	B-148
			104000	10600	2.17				104000	10600	2.17	8	- 6215DA	- 165		B-112	B-129	B-148
			104000	10600	2.26				104000	10600	2.73	8	- 6215DB	- 165		B-113	B-130	B-149
			124000	12700	2.69				118000	12000	3.25	8	- 6225DB	- 165		B-113	B-130	B-149

6. "*2" indicate models manufactured with reducer and motor separately mounted on a common baseplate (horizontal shaft direction) or on an adaptor (vertical shaft direction). Consult us for details, including dimensions.
7. Allowable radial load (Pro) is the value at the midpoint of the slow speed shaft.
8. "*3" indicate models with reduction ratios equal to nominal ratio. Refer to Table A-3 "6000SK Series (Actual Reduction Ratio)" on page A-4 for actual reduction ratio. Indicated reduction ratio is the same as actual reduction ratio for other models.
9. Maintain torque load during operation within "Output torque" in the table for models with "*1" in the SF column. They cannot be operated with 100% motor rating.

Selection Tables Gearmotors

n_1: Motor Speed

5.5 kW	Hz		50Hz		60Hz	
	P		4	6	4	6
	n_1	r/min	1450	980	1750	1165

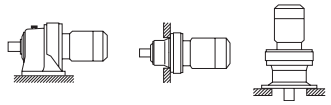

CHHM/CNHM CHFM/CNFM CVVM/CNVM

50Hz						60Hz						Nomenclature				Page of Dimension Sheet		
Output Speed n_2 [r/min]	Output Torque Tout [N·m]	[kgf·m]	Allowable Radial Load Pro [N]	[kgf]	SF	Output Speed n_2 [r/min]	Output Torque Tout [N·m]	[kgf·m]	Allowable Radial Load Pro [N]	[kgf]	SF	Input Capacity Symbol	-	Frame Size	- Reduction Ratio	CNHM CHHM	CNFM CHFM	CNVM CVVM
	4060	414	41700	4250	*1		4060	414	41700	4250	*1	8	-	6180DB	- 195	B-111	B-127	B-146
	4920	502	41700	4250	*1		4920	502	41700	4250	*1	8	-	6185DB	- 195	B-111	B-127	B-146
			58900	**6000**	**1.00**				**59000**	**6010**	**1.14**	**8**	**-**	**6190DA**	**- 195**	**B-111**	**B-128**	**B-147**
			58900	6000	1.00				59000	6010	1.21	8	-	6190DB	- 195	B-112	B-128	B-147
			58900	6000	1.02				59000	6010	1.14	8	-	6195DA	- 195	B-111	B-128	B-147
7.44			58900	6000	1.24	8.97			59000	6010	1.50	8	-	6195DB	- 195	B-112	B-128	B-147
	6360	648	84100	8570	1.46		5270	537	84100	8570	1.76	8	-	6205DB	- 195	B-112	B-129	B-148
			104000	10600	1.91				104000	10600	2.17	8	-	6215DA	- 195	B-112	B-129	B-148
			104000	10600	1.91				104000	10600	2.31	8	-	6215DB	- 195	B-113	B-130	B-149
			131000	13300	1.96				124000	12600	2.17	8	-	6225DA	- 195	B-113	B-130	B-149
			131000	13300	2.28				124000	12600	2.75	8	-	6225DB	- 195	B-113	B-130	B-149
	5000	510	41700	4250	*1		5000	510	41700	4250	*1	8	-	6185DB	- 231	B-111	B-127	B-146
			59000	**6010**	**1.06**				**59000**	**6010**	**1.14**	**8**	**-**	**6195DA**	**- 231**	**B-111**	**B-128**	**B-147**
			59000	6010	1.06				59000	6010	1.28	8	-	6195DB	- 231	B-112	B-128	B-147
			84100	8570	1.23				84100	8570	1.49	8	-	6205DB	- 231	B-112	B-129	B-148
6.28	7530	768	104000	10600	1.66	7.58	6240	636	104000	10600	2.00	8	-	6215DA	- 231	B-112	B-129	B-148
			139000	14200	1.97				132000	13400	2.17	8	-	6225DA	- 231	B-113	B-130	B-149
			139000	14200	1.97				132000	13400	2.37	8	-	6225DB	- 231	B-113	B-130	B-149
			173000	17700	2.51				164000	16700	3.03	8	-	6235DA	- 231	B-114	B-131	B-150
	5000	510	41700	4250	*1		5000	510	41700	4250	*1	8	-	6185DB	- 273	B-111	B-127	B-146
	6380	650	59000	6010	*1		6380	650	59000	6010	*1	8	-	6190DA	- 273	B-111	B-128	B-147
			59000	6010	0.89				59000	6010	1.08	8	-	6195DA	- 273	B-111	B-128	B-147
			84100	8570	0.94				84100	8570	1.07	8	-	6205DA	- 273	B-112	B-129	B-148
5.31			**84100**	**8570**	**1.04**	6.41			**84100**	**8570**	**1.26**	**8**	**-**	**6205DB**	**- 273**	**B-112**	**B-129**	**B-148**
	8900	907	104000	10600	1.40		7370	752	104000	10600	1.70	8	-	6215DA	- 273	B-112	B-129	B-148
			145000	14800	1.66				138000	14100	2.01	8	-	6225DA	- 273	B-113	B-130	B-149
			179000	18200	2.12				172000	17600	2.56	8	-	6235DA	- 273	B-114	B-131	B-150
			203000	20600	2.90				192000	19500	3.50	8	-	6245DA	- 273	B-114	B-131	B-150
	6380	650	59000	6010	*1		6380	650	59000	6010	*1	8	-	6190DA	- 319	B-111	B-128	B-147
	7960	811	59000	6010	*1		7960	811	59000	6010	*1	8	-	6195DA	- 319	B-111	B-128	B-147
	8080	823	84100	8570	*1		7590	773	84100	8570	*1	8	-	6205DA	- 319	B-112	B-129	B-148
			84100	8570	0.89				84100	8570	1.07	8	-	6205DB	- 319	B-112	B-129	B-148
4.55			104000	10600	1.22	5.49			104000	10600	1.47	8	-	6215DA	- 319	B-112	B-129	B-148
	10400	1060	145000	14800	1.45		8620	878	143000	14600	1.75	8	-	6225DA	- 319	B-113	B-130	B-149
			179000	18200	1.82				179000	18200	2.19	8	-	6235DA	- 319	B-114	B-131	B-150
			208000	21200	2.48				200000	20400	2.99	8	-	6245DA	- 319	B-114	B-131	B-150
	7960	811	59000	6010	*1		7960	811	59000	6010	*1	8	-	6195DA	- 377	B-111	B-128	B-147
	8550	872	84100	8570	*1		8030	819	84100	8570	*1	8	-	6205DA	- 377	B-112	B-129	B-148
			104000	**10600**	**1.03**				**104000**	**10600**	**1.24**	**8**	**-**	**6215DA**	**- 377**	**B-112**	**B-129**	**B-148**
3.85			145000	14800	1.22	4.64			145000	14800	1.48	8	-	6225DA	- 377	B-113	B-130	B-149
	12300	1250	179000	18200	1.54		10200	1040	179000	18200	1.86	8	-	6235DA	- 377	B-114	B-131	B-150
			208000	21200	2.10				208000	21200	2.53	8	-	6245DA	- 377	B-114	B-131	B-150
			258000	26300	2.64				258000	26300	3.19	8	-	6255DA	- 377	B-115	B-132	B-151

1. Combinations in **bold** are the recommended models for operations for 10 hours/day with uniform load (service factor is about 1.0 for motor rating at 50Hz).
2. Motor slippage may affect n_1 and n_2. Refer to technical data for details.
3. CNHM, CHHM, CNFM, CHFM, CNVM, and CVVM indicate types. Refer to page B-10 for details.
4. Lubrication method is different for each model. Refer to "Lubrication" section in page F-4~F-5 for details.
5. "6" at the end of "input capacity symbol" indicates models with 6P motor. Other models come with 4P motor.

Selection Tables Gearmotors

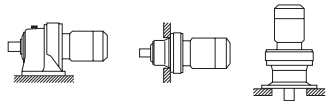

5.5 kW

n_1: Motor Speed

Hz	50Hz		60Hz	
P	4	6	4	6
n_1 r/min	1450	980	1750	1165

50Hz						60Hz						Nomenclature				Page of Dimension Sheet		
Output Speed n_2 [r/min]	Output Torque Tout [N·m]	[kgf·m]	Allowable Radial Load Pro [N]	[kgf]	SF	Output Speed n_2 [r/min]	Output Torque Tout [N·m]	[kgf·m]	Allowable Radial Load Pro [N]	[kgf]	SF	Input Capacity Symbol	- Frame Size	- Reduction Ratio		CNHM CHHM	CNFM CHFM	CNVM CVVM
3.07	12700	1290	104000	10600	*1	3.70	12700	1290	104000	10600	*1	8 -	6215DA	- 473		B-112	B-129	B-148
	15400	1570	104000	10600	0.82		12800	1300	104000	10600	0.98	8 -	6215DA	- 473		B-112	B-129	B-148
			145000	**14800**	**1.04**				**145000**	**14800**	**1.25**	**8 -**	**6225DA**	**- 473**		**B-113**	**B-130**	**B-149**
			179000	18200	1.33				179000	18200	1.60	8 -	6235DA	- 473		B-114	B-131	B-150
			208000	21200	1.67				208000	21200	2.02	8 -	6245DA	- 473		B-114	B-131	B-150
			258000	26300	2.24				258000	26300	2.70	8 -	6255DA	- 473		B-115	B-132	B-151
			276000	28100	2.98				276000	28100	3.60	8 -	6265DA	- 473		B-115	B-132	B-151
2.59	12700	1290	104000	10600	*1	3.13	12700	1290	104000	10600	*1	8 -	6215DA	- 559		B-112	B-129	B-148
	18200	1860	145000	14800	0.88		15100	1540	145000	14800	1.06	8 -	6225DA	- 559		B-113	B-130	B-149
			179000	18200	1.12				179000	18200	1.36	8 -	6235DA	- 559		B-114	B-131	B-150
			208000	21200	1.42				208000	21200	1.71	8 -	6245DA	- 559		B-114	B-131	B-150
			258000	26300	1.89				258000	26300	2.28	8 -	6255DA	- 559		B-115	B-132	B-151
			276000	28100	2.52				276000	28100	3.05	8 -	6265DA	- 559		B-115	B-132	B-151
2.23	12700	1290	104000	10600	*1	2.70	12700	1290	104000	10600	*1	8 -	6215DA	- 649		B-112	B-129	B-148
	15900	1620	145000	14800	*1		15900	1620	145000	14800	*1	8 -	6225DA	- 649		B-113	B-130	B-149
	21200	2160	179000	18200	0.97		17500	1790	179000	18200	1.17	8 -	6235DA	- 649		B-114	B-131	B-150
			208000	21200	1.22				208000	21200	1.47	8 -	6245DA	- 649		B-114	B-131	B-150
			258000	26300	1.63				258000	26300	1.97	8 -	6255DA	- 649		B-115	B-132	B-151
			276000	28100	2.17				276000	28100	2.62	8 -	6265DA	- 649		B-115	B-132	B-151
1.98	16000	1630	145000	14800	*1	2.39	16000	1630	145000	14800	*1	8 -	6225DA	- 731		B-113	B-130	B-149
	23800	2430	179000	18200	0.86		19700	2010	179000	18200	1.04	8 -	6235DA	- 731		B-114	B-131	B-150
			208000	21200	1.08				208000	21200	1.31	8 -	6245DA	- 731		B-114	B-131	B-150
			258000	26300	1.45				258000	26300	1.75	8 -	6255DA	- 731		B-115	B-132	B-151
			276000	28100	1.93				276000	28100	2.33	8 -	6265DA	- 731		B-115	B-132	B-151
1.72	18900	1930	179000	18200	*1	2.08	18900	1930	179000	18200	*1	8 -	6235DA	- 841		B-114	B-131	B-150
	27400	2790	208000	21200	0.94		22700	2320	208000	21200	1.14	8 -	6245DA	- 841		B-114	B-131	B-150
			258000	26300	1.18				258000	26300	1.43	8 -	6255DA	- 841		B-115	B-132	B-151
			276000	28100	1.68				276000	28100	2.02	8 -	6265DA	- 841		B-115	B-132	B-151
1.45	20500	2090	179000	18200	*1	1.74	20500	2090	179000	18200	*1	8 -	6235DA	- 1003		B-114	B-131	B-150
	25800	2630	208000	21200	*1		25800	2630	208000	21200	*1	8 -	6245DA	- 1003		B-114	B-131	B-150
	32700	3330	**258000**	**26300**	**1.06**		27100	2760	**258000**	**26300**	**1.27**	**8 -**	**6255DA**	**- 1003**		**B-115**	**B-132**	**B-151**
			276000	28100	1.41				276000	28100	1.70	8 -	6265DA	- 1003		B-115	B-132	B-151
1.16	25800	2630	208000	21200	*1	1.40	25800	2630	208000	21200	*1	8 -	6245DA	- 1247		B-114	B-131	B-150
	40700	4140	258000	26300	0.85		33700	3430	258000	26300	1.02	8 -	6255DA	- 1247		B-115	B-132	B-151
			276000	28100	1.13				276000	28100	1.37	8 -	6265DA	- 1247		B-115	B-132	B-151
0.980	31000	3160	258000	26300	*1	1.18	31000	3160	258000	26300	*1	8 -	6255DA	- 1479		B-115	B-132	B-151
	48200	4920	276000	28100	0.91		40000	4070	276000	28100	1.10	8 -	6265DA	- 1479		B-115	B-132	B-151
0.784	34500	3520	258000	26300	*1	0.946	34500	3520	258000	26300	*1	8 -	6255DA	- 1849		B-115	B-132	B-151
	46000	4690	276000	28100	*1		46000	4690	276000	28100	*1	8 -	6265DA	- 1849		B-115	B-132	B-151
0.702	46000	4690	276000	28100	*1	0.847	46000	4690	276000	28100	*1	8 -	6265DA	- 2065		B-115	B-132	B-151
0.572	46000	4690	276000	28100	*1	0.690	46000	4690	276000	28100	*1	8 -	6265DA	- 2537		B-115	B-132	B-151
0.476	44000	4490	276000	28100	*1	0.575	44000	4490	276000	28100	*1	8 -	6265DA	- 3045		B-115	B-132	B-151
0.417	46000	4690	276000	28100	*1	0.503	46000	4690	276000	28100	*1	8 -	6265DA	- 3481		B-115	B-132	B-151
0.327	44000	4490	276000	28100	*1	0.394	44000	4490	276000	28100	*1	8 -	6265DA	- 4437		B-115	B-132	B-151
0.282	46000	4690	276000	28100	*1	0.341	46000	4690	276000	28100	*1	8 -	6265DA	- 5133		B-115	B-132	B-151
0.235	44000	4490	276000	28100	*1	0.283	44000	4490	276000	28100	*1	8 -	6265DA	- 6177		B-115	B-132	B-151
0.192	44000	4490	276000	28100	*1	0.231	44000	4490	276000	28100	*1	8 -	6265DA	- 7569		B-115	B-132	B-151

6. "*2" indicate models manufactured with reducer and motor separately mounted on a common baseplate (horizontal shaft direction) or on an adaptor (vertical shaft direction). Consult us for details, including dimensions.
7. Allowable radial load (Pro) is the value at the midpoint of the slow speed shaft.
8. "*3" indicate models with reduction ratios equal to nominal ratio. Refer to Table A-3 "6000SK Series (Actual Reduction Ratio)" on page A-4 for actual reduction ratio. Indicated reduction ratio is the same as actual reduction ratio for other models.
9. Maintain torque load during operation within "Output torque" in the table for models with "*1" in the SF column. They cannot be operated with 100% motor rating.

Selection Tables Gearmotors

n_1: Motor Speed

7.5 kW	Hz	50Hz		60Hz	
	P	4	6	4	6
	n_1 r/min	1450	980	1750	1165

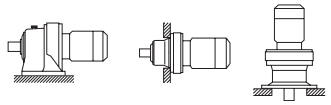

CHHM/CNHM CHFM/CNFM CVVM/CNVM

50Hz						60Hz						Nomenclature				Page of Dimension Sheet		
Output Speed n_2 [r/min]	Output Torque Tout [N·m]	Output Torque Tout [kgf·m]	Allowable Radial Load Pro [N]	Allowable Radial Load Pro [kgf]	SF	Output Speed n_2 [r/min]	Output Torque Tout [N·m]	Output Torque Tout [kgf·m]	Allowable Radial Load Pro [N]	Allowable Radial Load Pro [kgf]	SF	Input Capacity Symbol	- Frame Size	- Reduction Ratio		CNHM CHHM	CNFM CHFM	CNVM CVVM
			5980	**610**	**1.25**				**5650**	**576**	**1.25**	**10 -**	**6130**	**- 6**		**B-102**	**B-118**	**B-137**
			5980	610	1.51				5650	576	1.51	10 -	6135	- 6		B-102	B-118	B-137
242	282	28.7	9330	951	1.73	292	233	23.8	8830	901	1.73	10 -	6140	- 6		B-102	B-118	B-137
			9330	951	2.01				8830	901	2.01	10 -	6145	- 6		B-102	B-118	B-137
			10400	1070	2.71				9830	1000	2.71	10 -	6160	- 6		B-103	B-119	B-138
			6650	**678**	**1.25**				**6290**	**641**	**1.25**	**10 -**	**6130**	**- 8**		**B-102**	**B-118**	**B-137**
			6650	678	1.51				6290	641	1.51	10 -	6135	- 8		B-102	B-118	B-137
181	375	38.3	10300	1050	1.73	219	311	31.7	9790	998	1.73	10 -	6140	- 8		B-102	B-118	B-137
			10300	1050	2.01				9790	998	2.01	10 -	6145	- 8		B-102	B-118	B-137
			11700	1190	2.63				11000	1120	2.63	10 -	6160	- 8		B-103	B-119	B-138
			7570	**771**	**1.25**				**7150**	**729**	**1.25**	**10 -**	**6130**	**- 11**		**B-102**	**B-118**	**B-137**
			7570	771	1.51				7150	729	1.51	10 -	6135	- 11		B-102	B-118	B-137
132	516	52.6	11600	1180	1.73	159	428	43.6	11000	1120	1.73	10 -	6140	- 11		B-102	B-118	B-137
			11600	1180	2.01				11000	1120	2.01	10 -	6145	- 11		B-102	B-118	B-137
			13200	1350	2.63				12500	1270	2.63	10 -	6160	- 11		B-103	B-119	B-138
			7860	**801**	**1.25**				**7430**	**758**	**1.25**	**10 -**	**6130**	**- 13**		**B-102**	**B-118**	**B-137**
			7860	801	1.36				7430	758	1.51	10 -	6135	- 13		B-102	B-118	B-137
112	610	62.2	11800	1210	1.73	135	505	51.5	11200	1140	1.73	10 -	6140	- 13		B-102	B-118	B-137
			11800	1210	2.01				11200	1140	2.01	10 -	6145	- 13		B-102	B-118	B-137
			13800	1410	2.63				13000	1330	2.63	10 -	6160	- 13		B-103	B-119	B-138
			8000	**815**	**1.04**				**7570**	**771**	**1.04**	**10 -**	**6130**	**- 15**		**B-102**	**B-118**	**B-137**
			8000	815	1.20				7570	771	1.20	10 -	6135	- 15		B-102	B-118	B-137
96.7	704	71.8	12400	1260	1.60	117	583	59.5	11700	1200	1.60	10 -	6140	- 15		B-102	B-118	B-137
			12400	1260	1.93				11700	1200	2.01	10 -	6145	- 15		B-102	B-118	B-137
			14700	1490	2.49				13800	1410	2.49	10 -	6160	- 15		B-103	B-119	B-138
			14700	1490	2.99				13800	1410	3.01	10 -	6165	- 15		B-103	B-119	B-138
			8550	**872**	**1.11**				**8100**	**826**	**1.11**	**10 -**	**6135**	**- 17**		**B-102**	**B-118**	**B-137**
			12900	1320	1.35				12200	1250	1.35	10 -	6140	- 17		B-102	B-118	B-137
85.3	798	81.3	12900	1320	1.60	103	661	67.4	12200	1250	1.60	10 -	6145	- 17		B-102	B-118	B-137
			15100	1540	1.75				14300	1450	1.75	10 -	6160	- 17		B-103	B-119	B-138
			15100	1540	2.51				14300	1450	2.51	10 -	6165	- 17		B-103	B-119	B-138
			17100	1740	2.63				16100	1640	2.63	10 -	6170	- 17		B-103	B-119	B-138
			9050	923	0.90				8590	876	1.00	10 -	6135	- 21		B-102	B-118	B-137
			13800	**1410**	**1.15**				**13100**	**1330**	**1.15**	**10 -**	**6140**	**- 21**		**B-102**	**B-118**	**B-137**
69.0	985	100	13800	1410	1.27	83.3	817	83.2	13100	1330	1.47	10 -	6145	- 21		B-102	B-118	B-137
			16200	1650	1.72				15300	1560	1.72	10 -	6160	- 21		B-103	B-119	B-138
			16200	1650	2.13				15300	1560	2.15	10 -	6165	- 21		B-103	B-119	B-138
			18400	1880	2.48				17400	1770	2.60	10 -	6170	- 21		B-103	B-119	B-138
			14400	**1470**	**1.05**				**13700**	**1390**	**1.05**	**10 -**	**6145**	**- 25**		**B-102**	**B-118**	**B-137**
			16900	1720	1.31				15900	1630	1.31	10 -	6160	- 25		B-103	B-119	B-138
58.0	1170	120	16900	1720	1.79	70.0	972	99.1	15900	1630	2.01	10 -	6165	- 25		B-103	B-119	B-138
			19100	1940	2.08				18000	1830	2.11	10 -	6170	- 25		B-103	B-119	B-138
			19100	1940	2.60				18000	1830	2.60	10 -	6175	- 25		B-103	B-119	B-138
			14700	**1500**	**1.00**				**14000**	**1420**	**1.00**	**10 -**	**6145**	**- 29**		**B-102**	**B-118**	**B-137**
			17600	1790	1.27				16600	1690	1.40	10 -	6160	- 29		B-103	B-119	B-138
			17600	1790	1.52				16600	1690	1.52	10 -	6165	- 29		B-103	B-119	B-138
50.0	1360	139	20100	2050	1.80	60.3	1130	115	18900	1930	1.91	10 -	6170	- 29		B-103	B-119	B-138
			20100	2050	2.32				18900	1930	2.51	10 -	6175	- 29		B-103	B-119	B-138
			26800	2740	2.60				25300	2580	2.60	10 -	6180	- 29		B-104	B-120	B-139
			14500	1480	0.83				14900	1520	1.00	10 -	6145	- 35		B-102	B-118	B-137
			18600	**1890**	**1.07**				**17500**	**1790**	**1.29**	**10 -**	**6160**	**- 35**		**B-103**	**B-119**	**B-138**
			18600	1890	1.28				17500	1790	1.52	10 -	6165	- 35		B-103	B-119	B-138
41.4	1640	167	21200	2160	1.49	50.0	1360	139	20000	2040	1.60	10 -	6170	- 35		B-103	B-119	B-138
			21200	2160	1.92				20000	2040	2.01	10 -	6175	- 35		B-103	B-119	B-138
			28600	2920	2.47				26900	2750	2.51	10 -	6180	- 35		B-104	B-120	B-139

1. Combinations in **bold** are the recommended models for operations for 10 hours/day with uniform load (service factor is about 1.0 for motor rating at 50Hz).
2. Motor slippage may affect n_1 and n_2. Refer to technical data for details.
3. CNHM, CHHM, CNFM, CHFM, CNVM, and CVVM indicate types. Refer to page B-10 for details.
4. Lubrication method is different for each model. Refer to "Lubrication" section in page F-4~F-5 for details.
5. "6" at the end of "input capacity symbol" indicates models with 6P motor. Other models come with 4P motor.

Selection Tables Gearmotors

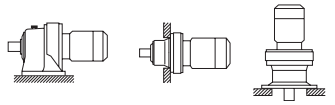

CHHM/CNHM CHFM/CNFM CVVM/CNVM

n1: Motor Speed

7.5 kW	Hz	50Hz		60Hz	
	P	4	6	4	6
	n1 r/min	1450	980	1750	1165

50Hz						60Hz						Nomenclature				Page of Dimension Sheet		
Output Speed n2 [r/min]	Output Torque Tout [N·m]	[kgf·m]	Allowable Radial Load Pro [N]	[kgf]	SF	Output Speed n2 [r/min]	Output Torque Tout [N·m]	[kgf·m]	Allowable Radial Load Pro [N]	[kgf]	SF	Input Capacity Symbol	- Frame Size	- Reduction Ratio		CNHM CHHM	CNFM CHFM	CNVM CVVM
			19700	**2010**	**1.04**				**18600**	**1900**	**1.05**	**10 -**	**6165**	**- 43**		**B-103**	**B-119**	**B-138**
			22500	2300	1.21				21300	2170	1.30	10 -	6170	- 43		B-103	B-119	B-138
33.7	2020	206	22500	2300	1.51	40.7	1670	170	21300	2170	1.51	10 -	6175	- 43		B-103	B-119	B-138
			30700	3130	2.01				28900	2950	2.01	10 -	6180	- 43		B-104	B-120	B-139
			30700	3130	2.48				28900	2950	2.51	10 -	6185	- 43		B-104	B-120	B-139
			42800	4370	2.79				40300	4110	2.79	10 -	6190	- 43		B-104	B-120	B-139
			20400	2080	0.88				19300	1970	1.00	10 -	6165	- 51		B-103	B-119	B-138
			23400	**2390**	**1.02**				**22100**	**2250**	**1.12**	**10 -**	**6170**	**- 51**		**B-103**	**B-119**	**B-138**
			23400	2390	1.32				22100	2250	1.51	10 -	6175	- 51		B-103	B-119	B-138
28.4	2390	244	31700	3230	1.60	34.3	1980	202	29900	3050	1.60	10 -	6180	- 51		B-104	B-120	B-139
			31700	3230	2.01				29900	3050	2.01	10 -	6185	- 51		B-104	B-120	B-139
			44800	4560	2.43				42100	4290	2.43	10 -	6190	- 51		B-104	B-120	B-139
			44800	4560	2.79				42100	4290	2.79	10 -	6195	- 51		B-104	B-120	B-139
			24400	**2490**	**1.11**				**23100**	**2360**	**1.11**	**10 -**	**6175**	**- 59**		**B-103**	**B-119**	**B-138**
			33100	3380	1.30				31200	3180	1.30	10 -	6180	- 59		B-104	B-120	B-139
24.6	2770	282	33100	3380	1.60	29.7	2290	234	31200	3180	1.60	10 -	6185	- 59		B-104	B-120	B-139
			46800	4770	2.04				44000	4490	2.04	10 -	6190	- 59		B-104	B-120	B-139
			46800	4770	2.51				44000	4490	2.51	10 -	6195	- 59		B-104	B-120	B-139
			25700	2620	0.93				24300	2480	0.95	10 -	6175	- 71		B-103	B-119	B-138
			35100	**3580**	**1.17**				**33100**	**3380**	**1.17**	**10 -**	**6180**	**- 71**		**B-104**	**B-120**	**B-139**
20.4	3330	340	35100	3580	1.31	24.6	2760	281	33100	3380	1.31	10 -	6185	- 71		B-104	B-120	B-139
			49600	5050	1.80				46700	4760	1.80	10 -	6190	- 71		B-104	B-120	B-139
			49600	5050	2.08				46700	4760	2.08	10 -	6195	- 71		B-104	B-120	B-139
			37700	**3840**	**1.15**				**35600**	**3620**	**1.15**	**10 -**	**6185**	**- 87**		**B-104**	**B-120**	**B-139**
16.7	4080	416	53300	5430	1.56	20.1	3380	345	50200	5120	1.57	10 -	6190	- 87		B-104	B-120	B-139
			53300	5430	1.81				50200	5120	1.81	10 -	6195	- 87		B-104	B-120	B-139
			40000	**4080**	**1.06**				**37800**	**3850**	**1.28**	**10 -**	**6185DB**	**- 104**		**B-111**	**B-127**	**B-146**
13.9	4620	471	56400	5750	1.38	16.8	3830	391	53200	5420	1.59	10 -	6190DB	- 104		B-112	B-128	B-147
			56400	5750	1.59				53200	5420	1.59	10 -	6195DB	- 104		B-112	B-128	B-147
	4060	414	41700	4250	*1		4060	414	40300	4100	*1	10 -	6180DB	- 121		B-111	B-127	B-146
			41700	4250	0.89				40100	4090	1.08	10 -	6185DB	- 121		B-111	B-127	B-146
			59000	6010	1.19				56600	5770	1.43	10 -	6190DB	- 121		B-112	B-128	B-147
12.0	5380	548	59000	6010	1.41	14.5	4460	454	56600	5770	1.59	10 -	6195DB	- 121		B-112	B-128	B-147
			84100	8570	1.59				84100	8570	1.59	10 -	6205DB	- 121		B-112	B-129	B-148
			104000	10600	2.12				102000	10400	2.55	10 -	6215DB	- 121		B-113	B-130	B-149
			115000	11700	2.50				109000	11100	3.02	10 -	6225DB	- 121		B-113	B-130	B-149
	4060	414	41700	4250	*1		4060	414	41700	4250	*1	10 -	6180DB	- 143		B-111	B-127	B-146
10.1	4900	500	41700	4250	*1	12.2	4900	500	41700	4250	*1	10 -	6185DB	- 143		B-111	B-127	B-146
	6360	648	**58700**	**5980**	**1.00**		5270	537	**58800**	**5990**	**1.21**	**10 -**	**6190DB**	**- 143**		**B-112**	**B-128**	**B-147**
			58700	5980	1.20				58800	5990	1.45	10 -	6195DB	- 143		B-112	B-128	B-147
	4920	502	41700	4250	*1		4920	502	41700	4250	*1	10 -	6185DB	- 165		B-111	B-127	B-146
			58500	**5960**	**1.08**				**59000**	**6010**	**1.30**	**10 -**	**6195DB**	**- 165**		**B-112**	**B-128**	**B-147**
			84100	8570	1.26				84100	8570	1.53	10 -	6205DB	- 165		B-112	B-129	B-148
8.79	7340	748	104000	10600	1.59	10.6	6080	620	104000	10600	1.59	10 -	6215DA	- 165		B-112	B-129	B-148
			104000	10600	1.66				104000	10600	2.00	10 -	6215DB	- 165		B-113	B-130	B-149
			124000	12600	1.97				117000	12000	2.38	10 -	6225DB	- 165		B-113	B-130	B-149
			154000	15700	2.67				146000	14800	3.23	10 -	6235DA	- 165		B-114	B-131	B-150

6. "*2" indicate models manufactured with reducer and motor separately mounted on a common baseplate (horizontal shaft direction) or on an adaptor (vertical shaft direction). Consult us for details, including dimensions.
7. Allowable radial load (Pro) is the value at the midpoint of the slow speed shaft.
8. "*3" indicate models with reduction ratios equal to nominal ratio. Refer to Table A-3 "6000SK Series (Actual Reduction Ratio)" on page A-4 for actual reduction ratio. Indicated reduction ratio is the same as actual reduction ratio for other models.
9. Maintain torque load during operation within "Output torque" in the table for models with "*1" in the SF column. They cannot be operated with 100% motor rating.

Selection Tables Gearmotors

n_1: Motor Speed

7.5 kW	Hz		50Hz		60Hz	
	P		4	6	4	6
	n_1	r/min	1450	980	1750	1165

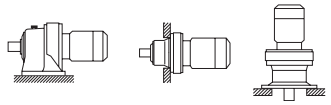

CHHM/CNHM CHFM/CNFM CVVM/CNVM

50Hz						60Hz						Nomenclature			Page of Dimension Sheet		
Output Speed n_2 [r/min]	Output Torque Tout [N·m]	[kgf·m]	Allowable Radial Load Pro [N]	[kgf]	SF	Output Speed n_2 [r/min]	Output Torque Tout [N·m]	[kgf·m]	Allowable Radial Load Pro [N]	[kgf]	SF	Input Capacity Symbol	Frame Size	Reduction Ratio	CNHM CHHM	CNFM CHFM	CNVM CVVM
7.44	6380	650	58900	6000	*1	8.97	6380	650	58900	6000	*1	10 -	6190DB	- 195	B-112	B-128	B-147
			58000	5910	0.91				58600	5970	1.10	10 -	6195DB	- 195	B-112	B-128	B-147
			84100	**8570**	**1.07**				**84100**	**8570**	**1.29**	**10 -**	**6205DB**	**- 195**	**B-112**	**B-129**	**B-148**
			104000	10600	1.40				104000	10600	1.59	10 -	6215DA	- 195	B-112	B-129	B-148
	8670	884	104000	10600	1.40		7180	732	104000	10600	1.69	10 -	6215DB	- 195	B-113	B-130	B-149
			130000	13300	1.44				123000	12600	1.59	10 -	6225DA	- 195	B-113	B-130	B-149
			130000	13300	1.67				123000	12600	2.02	10 -	6225DB	- 195	B-113	B-130	B-149
			162000	16500	2.26				153000	15600	2.73	10 -	6235DA	- 195	B-114	B-131	B-150
6.28	6380	650	59000	6010	*1	7.58	6380	650	59000	6010	*1	10 -	6190DB	- 231	B-112	B-128	B-147
	7960	811	59000	6010	*1		7960	811	59000	6010	*1	10 -	6195DB	- 231	B-112	B-128	B-147
			84100	8570	0.90				84100	8570	1.09	10 -	6205DB	- 231	B-112	B-129	B-148
			104000	10600	1.22				104000	10600	1.47	10 -	6215DA	- 231	B-112	B-129	B-148
	10300	1050	138000	14100	1.44		8510	867	131000	13400	1.59	10 -	6225DA	- 231	B-113	B-130	B-149
			138000	14100	1.44				131000	13400	1.74	10 -	6225DB	- 231	B-113	B-130	B-149
			173000	17600	1.84				164000	16700	2.22	10 -	6235DA	- 231	B-114	B-131	B-150
			192000	19600	2.51				182000	18600	3.03	10 -	6245DA	- 231	B-114	B-131	B-150
5.31	7960	811	59000	6010	*1	6.41	7960	811	59000	6010	*1	10 -	6195DB	- 273	B-112	B-128	B-147
	9270	945	84100	8570	*1		9270	945	84100	8570	*1	10 -	6205DB	- 273	B-112	B-129	B-148
			104000	**10600**	**1.03**				**104000**	**10600**	**1.24**	**10 -**	**6215DA**	**- 273**	**B-112**	**B-129**	**B-148**
			145000	14800	1.22				138000	14000	1.47	10 -	6225DA	- 273	B-113	B-130	B-149
	12100	1240	179000	18200	1.56		10100	1030	172000	17500	1.88	10 -	6235DA	- 273	B-114	B-131	B-150
			202000	20600	2.13				191000	19500	2.57	10 -	6245DA	- 273	B-114	B-131	B-150
			246000	25100	2.55				233000	23700	3.08	10 -	6255DA	- 273	B-115	B-132	B-151
4.55			104000	10600	0.89	5.49			104000	10600	1.08	10 -	6215DA	- 319	B-112	B-129	B-148
			145000	**14800**	**1.06**				**143000**	**14600**	**1.28**	**10 -**	**6225DA**	**- 319**	**B-113**	**B-130**	**B-149**
	14200	1450	179000	18200	1.33		11800	1200	179000	18200	1.61	10 -	6235DA	- 319	B-114	B-131	B-150
			208000	21200	1.82				199000	20300	2.20	10 -	6245DA	- 319	B-114	B-131	B-150
			258000	26300	2.29				245000	25000	2.76	10 -	6255DA	- 319	B-115	B-132	B-151
3.85	12700	1290	104000	10600	*1	4.64	12700	1290	104000	10600	*1	10 -	6215DA	- 377	B-112	B-129	B-148
			145000	14800	0.90				145000	14800	1.08	10 -	6225DA	- 377	B-113	B-130	B-149
			179000	18200	1.13				179000	18200	1.36	10 -	6235DA	- 377	B-114	B-131	B-150
	16800	1710	208000	21200	1.54		13900	1420	208000	21200	1.86	10 -	6245DA	- 377	B-114	B-131	B-150
			258000	26300	1.94				257000	26200	2.34	10 -	6255DA	- 377	B-115	B-132	B-151
			276000	28100	2.74				276000	28100	3.31	10 -	6265DA	- 377	B-115	B-132	B-151
3.07	16000	1630	145000	14800	*1	3.70	16000	1630	145000	14800	*1	10 -	6225DA	- 473	B-113	B-130	B-149
			179000	18200	0.97				179000	18200	1.18	10 -	6235DA	- 473	B-114	B-131	B-150
	21000	2140	208000	21200	1.23		17400	1780	208000	21200	1.48	10 -	6245DA	- 473	B-114	B-131	B-150
			258000	26300	1.64				258000	26300	1.98	10 -	6255DA	- 473	B-115	B-132	B-151
			276000	28100	2.19				276000	28100	2.64	10 -	6265DA	- 473	B-115	B-132	B-151
2.59	16000	1630	145000	14800	*1	3.13	16000	1630	145000	14800	*1	10 -	6225DA	- 559	B-113	B-130	B-149
	20500	2090	179000	18200	*1		20500	2090	179000	18200	*1	10 -	6235DA	- 559	B-114	B-131	B-150
			179000	18200	0.82				179000	18200	1.00	10 -	6235DA	- 559	B-114	B-131	B-150
			208000	**21200**	**1.04**				**208000**	**21200**	**1.25**	**10 -**	**6245DA**	**- 559**	**B-114**	**B-131**	**B-150**
	24900	2530	258000	26300	1.39		20600	2100	258000	26300	1.68	10 -	6255DA	- 559	B-115	B-132	B-151
			276000	28100	1.85				276000	28100	2.23	10 -	6265DA	- 559	B-115	B-132	B-151
			248000	25300	2.74				248000	25300	3.31	10 -	6275DA	- 559	B-115	-	B-151
2.23	20500	2090	179000	18200	*1	2.70	20500	2090	179000	18200	*1	10 -	6235DA	- 649	B-114	B-131	B-150
			208000	21200	0.89				208000	21200	1.08	10 -	6245DA	- 649	B-114	B-131	B-150
	28900	2940	258000	26300	1.20		23900	2440	258000	26300	1.44	10 -	6255DA	- 649	B-115	B-132	B-151
			276000	28100	1.59				276000	28100	1.92	10 -	6265DA	- 649	B-115	B-132	B-151
			248000	25300	2.36				248000	25300	2.85	10 -	6275DA	- 649	B-115	-	B-151
1.98	20500	2090	179000	18200	*1	2.39	20500	2090	179000	18200	*1	10 -	6235DA	- 731	B-114	B-131	B-150
	25800	2630	208000	21200	*1		25800	2630	208000	21200	*1	10 -	6245DA	- 731	B-114	B-131	B-150
			258000	**26300**	**1.06**				**258000**	**26300**	**1.28**	**10 -**	**6255DA**	**- 731**	**B-115**	**B-132**	**B-151**
	32500	3310	276000	28100	1.42		26900	2740	276000	28100	1.71	10 -	6265DA	- 731	B-115	B-132	B-151
			248000	25300	2.10				248000	25300	2.53	10 -	6275DA	- 731	B-115	-	B-151

1. Combinations in **bold** are the recommended models for operations for 10 hours/day with uniform load (service factor is about 1.0 for motor rating at 50Hz).
2. Motor slippage may affect n_1 and n_2. Refer to technical data for details.
3. CNHM, CHHM, CNFM, CHFM, CNVM, and CVVM indicate types. Refer to page B-10 for details.
4. Lubrication method is different for each model. Refer to "Lubrication" section in page F-4~F-5 for details.
5. "6" at the end of "input capacity symbol" indicates models with 6P motor. Other models come with 4P motor.

Selection Tables Gearmotors

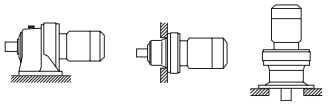

CHHM/CNHM CHFM/CNFM CVVM/CNVM

n_1: Motor Speed

7.5 kW	Hz	50Hz		60Hz	
	P	4	6	4	6
	n_1 r/min	1450	980	1750	1165

50Hz						60Hz						Nomenclature				Page of Dimension Sheet		
Output Speed n_2	Output Torque Tout		Allowable Radial Load Pro		SF	Output Speed n_2	Output Torque Tout		Allowable Radial Load Pro		SF	Input Capacity Symbol	-	Frame Size	- Reduction Ratio	CNHM CHHM	CNFM CHFM	CNVM CVVM
[r/min]	[N·m]	[kgf·m]	[N]	[kgf]		[r/min]	[N·m]	[kgf·m]	[N]	[kgf]								
1.72	25800	2630	208000	21200	*1	2.08	25800	2630	208000	21200	*1	10	-	6245DA	- 841	B-114	B-131	B-150
	37400	3810	258000	26300	0.87		31000	3160	258000	26300	1.05	10	-	6255DA	- 841	B-115	B-132	B-151
			276000	28100	1.23				276000	28100	1.48	10	-	6265DA	- 841	B-115	B-132	B-151
			248000	25300	1.82				248000	25300	2.20	10	-	6275DA	- 841	B-115	-	B-151
1.45	34500	3520	258000	26300	*1	1.74	34500	3520	258000	26300	*1	10	-	6255DA	- 1003	B-115	B-132	B-151
	44600	4550	**276000**	**28100**	**1.03**		36900	3770	**276000**	**28100**	**1.25**	**10**	**-**	**6265DA**	**- 1003**	**B-115**	**B-132**	**B-151**
			248000	25300	1.53				248000	25300	1.85	10	-	6275DA	- 1003	B-115	-	B-151
1.16	34500	3520	258000	26300	*1	1.40	34500	3520	258000	26300	*1	10	-	6255DA	- 1247	B-115	B-132	B-151
	46000	4690	276000	28100	*1		46000	4690	276000	28100	*1	10	-	6265DA	- 1247	B-115	B-132	B-151
	55400	5650	276000	28100	0.83		45900	4680	276000	28100	1.00	10	-	6265DA	- 1247	B-115	B-132	B-151
			248000	25300	1.23				248000	25300	1.48	10	-	6275DA	- 1247	B-115	-	B-151
0.980	44000	4490	276000	28100	*1	1.18	44000	4490	276000	28100	*1	10	-	6265DA	- 1479	B-115	B-132	B-151
	65800	6700	**247000**	**25200**	**1.04**		**54500**	**5550**	**248000**	**25300**	**1.25**	**10**	**-**	**6275DA**	**- 1479**	**B-115**	**-**	**B-151**
0.784	82200	8380	248000	25300	0.83	0.946	68100	6940	248000	25300	1.00	10	-	6275DA	- 1849	B-115	-	B-151
0.702	68200	6950	248000	25300	*1	0.847	68200	6950	248000	25300	*1	10	-	6275DA	- 2065	B-115	-	B-151
0.572	68200	6950	248000	25300	*1	0.690	68200	6950	248000	25300	*1	10	-	6275DA	- 2537	B-115	-	B-151
0.476	68200	6950	245000	25000	*1	0.575	68200	6950	245000	25000	*1	10	-	6275DA	- 3045	B-115	-	B-151
0.417	68200	6950	248000	25300	*1	0.503	68200	6950	248000	25300	*1	10	-	6275DA	- 3481	B-115	-	B-151
0.327	68200	6950	245000	25000	*1	0.394	68200	6950	245000	25000	*1	10	-	6275DA	- 4437	B-115	-	B-151
0.282	68200	6950	245000	25000	*1	0.341	68200	6950	245000	25000	*1	10	-	6275DA	- 5133	B-115	-	B-151
0.235	68200	6950	245000	25000	*1	0.283	68200	6950	245000	25000	*1	10	-	6275DA	- 6177	B-115	-	B-151
0.192	68200	6950	245000	25000	*1	0.231	68200	6950	245000	25000	*1	10	-	6275DA	- 7569	B-115	-	B-151

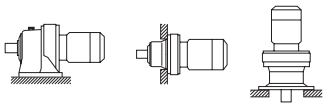

CHHM/CNHM CHFM/CNFM CVVM/CNVM

n_1: Motor Speed

11 kW	Hz	50Hz		60Hz	
	P	4	6	4	6
	n_1 r/min	1450	980	1750	1165

50Hz						60Hz						Nomenclature				Page of Dimension Sheet		
Output Speed n_2	Output Torque Tout		Allowable Radial Load Pro		SF	Output Speed n_2	Output Torque Tout		Allowable Radial Load Pro		SF	Input Capacity Symbol	-	Frame Size	- Reduction Ratio	CNHM CHHM	CNFM CHFM	CNVM CVVM
[r/min]	[N·m]	[kgf·m]	[N]	[kgf]		[r/min]	[N·m]	[kgf·m]	[N]	[kgf]								
242	413	42.1	**5840**	**595**	**1.03**	292	342	34.9	**5540**	**564**	**1.03**	**15**	**-**	**6135**	**- 6**	**B-102**	**B-118**	**B-137**
			9270	945	1.18				8780	895	1.18	15	-	6140	- 6	B-102	B-118	B-137
			9270	945	1.37				8780	895	1.37	15	-	6145	- 6	B-102	B-118	B-137
			10400	1060	1.85				9760	995	1.85	15	-	6160	- 6	B-103	B-119	B-138
			10400	1060	2.19				9760	995	2.19	15	-	6165	- 6	B-103	B-119	B-138
			11700	1190	2.51				11000	1120	2.51	15	-	6170	- 6	B-103	B-119	B-138
			11700	1190	2.74				11000	1120	2.74	15	-	6175	- 6	B-103	B-119	B-138
181	551	56.1	**6480**	**661**	**1.03**	219	456	46.5	**6150**	**627**	**1.03**	**15**	**-**	**6135**	**- 8**	**B-102**	**B-118**	**B-137**
			10300	1050	1.18				9730	992	1.18	15	-	6140	- 8	B-102	B-118	B-137
			10300	1050	1.37				9730	992	1.37	15	-	6145	- 8	B-102	B-118	B-137
			11600	1180	1.79				10900	1110	1.79	15	-	6160	- 8	B-103	B-119	B-138
			11600	1180	2.19				10900	1110	2.19	15	-	6165	- 8	B-103	B-119	B-138
			12900	1320	2.51				12200	1240	2.51	15	-	6170	- 8	B-103	B-119	B-138
			12900	1320	2.74				12200	1240	2.74	15	-	6175	- 8	B-103	B-119	B-138

6. "*2" indicate models manufactured with reducer and motor separately mounted on a common baseplate (horizontal shaft direction) or on an adaptor (vertical shaft direction). Consult us for details, including dimensions.
7. Allowable radial load (Pro) is the value at the midpoint of the slow speed shaft.
8. "*3" indicate models with reduction ratios equal to nominal ratio. Refer to Table A-3 "6000SK Series (Actual Reduction Ratio)" on page A-4 for actual reduction ratio. Indicated reduction ratio is the same as actual reduction ratio for other models.
9. Maintain torque load during operation within "Output torque" in the table for models with "*1" in the SF column. They cannot be operated with 100% motor rating.

Selection Tables Gearmotors

n_1: Motor Speed

11 kW	Hz		50Hz		60Hz	
	P		4	6	4	6
	n_1	r/min	1450	980	1750	1165

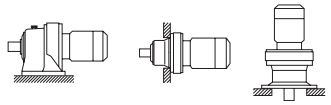

CHHM/CNHM CHFM/CNFM CVVM/CNVM

50Hz						60Hz						Nomenclature				Page of Dimension Sheet		
Output Speed n_2 [r/min]	Output Torque Tout [N·m]	[kgf·m]	Allowable Radial Load Pro [N]	[kgf]	SF	Output Speed n_2 [r/min]	Output Torque Tout [N·m]	[kgf·m]	Allowable Radial Load Pro [N]	[kgf]	SF	Input Capacity Symbol	- Frame Size	- Reduction Ratio		CNHM CHHM	CNFM CHFM	CNVM CVVM
			7360	**750**	**1.03**				**6980**	**712**	**1.03**	**15 -**	**6135**	**- 11**		**B-102**	**B-118**	**B-137**
			11500	1170	1.18				10900	1110	1.18	15 -	6140	- 11		B-102	B-118	B-137
			11500	1170	1.37				10900	1110	1.37	15 -	6145	- 11		B-102	B-118	B-137
132	757	77.2	13100	1330	1.79	159	627	63.9	12300	1260	1.79	15 -	6160	- 11		B-103	B-119	B-138
			13100	1330	2.19				12300	1260	2.19	15 -	6165	- 11		B-103	B-119	B-138
			14900	1520	2.51				14000	1430	2.51	15 -	6170	- 11		B-103	B-119	B-138
			14900	1520	2.74				14000	1430	2.74	15 -	6175	- 11		B-103	B-119	B-138
			11700	**1200**	**1.18**				**11100**	**1140**	**1.18**	**15 -**	**6140**	**- 13**		**B-102**	**B-118**	**B-137**
			11700	1200	1.37				11100	1140	1.37	15 -	6145	- 13		B-102	B-118	B-137
			13700	1390	1.79				12900	1320	1.79	15 -	6160	- 13		B-103	B-119	B-138
112	895	91.2	13700	1390	2.05	135	741	75.6	12900	1320	2.05	15 -	6165	- 13		B-103	B-119	B-138
			15500	1580	2.48				14600	1490	2.48	15 -	6170	- 13		B-103	B-119	B-138
			15500	1580	2.74				14600	1490	2.74	15 -	6175	- 13		B-103	B-119	B-138
			12300	**1250**	**1.09**				**11600**	**1190**	**1.09**	**15 -**	**6140**	**- 15**		**B-102**	**B-118**	**B-137**
			12300	1250	1.32				11600	1190	1.37	15 -	6145	- 15		B-102	B-118	B-137
			14500	1470	1.70				13600	1390	1.70	15 -	6160	- 15		B-103	B-119	B-138
96.7	1030	105	14500	1470	2.04	117	855	87.2	13600	1390	2.05	15 -	6165	- 15		B-103	B-119	B-138
			16300	1660	2.32				15400	1570	2.32	15 -	6170	- 15		B-103	B-119	B-138
			16300	1660	2.74				15400	1570	2.74	15 -	6175	- 15		B-103	B-119	B-138
			21700	2210	2.95				20400	2080	2.95	15 -	6180	- 15		B-104	B-120	B-139
			12800	**1300**	**1.09**				**12100**	**1240**	**1.09**	**15 -**	**6145**	**- 17**		**B-102**	**B-118**	**B-137**
			14900	1520	1.19				14100	1430	1.19	15 -	6160	- 17		B-103	B-119	B-138
			14900	1520	1.71				14100	1430	1.71	15 -	6165	- 17		B-103	B-119	B-138
85.3	1170	119	16900	1720	1.79	103	969	98.8	16000	1630	1.79	15 -	6170	- 17		B-103	B-119	B-138
			16900	1720	2.19				16000	1630	2.19	15 -	6175	- 17		B-103	B-119	B-138
			22900	2340	2.78				21600	2200	2.78	15 -	6180	- 17		B-104	B-120	B-139
			13600	1390	0.86				12900	1320	1.00	15 -	6145	- 21		B-102	B-118	B-137
			15900	**1620**	**1.17**				**15000**	**1530**	**1.17**	**15 -**	**6160**	**- 21**		**B-103**	**B-119**	**B-138**
			15900	1620	1.45				15000	1530	1.46	15 -	6165	- 21		B-103	B-119	B-138
69.0	1450	147	18200	1860	1.69	83.3	1200	122	17200	1750	1.77	15 -	6170	- 21		B-103	B-119	B-138
			18200	1860	2.15				17200	1750	2.19	15 -	6175	- 21		B-103	B-119	B-138
			24500	2500	2.73				23100	2350	2.73	15 -	6180	- 21		B-104	B-120	B-139
			16600	1690	1.22				15700	1600	1.37	15 -	6165	- 25		B-103	B-119	B-138
			18800	1920	1.42				17800	1810	1.44	15 -	6170	- 25		B-103	B-119	B-138
58.0	1720	175	18800	1920	1.77	70.0	1430	145	17800	1810	1.77	15 -	6175	- 25		B-103	B-119	B-138
			25500	2600	2.19				24000	2450	2.19	15 -	6180	- 25		B-104	B-120	B-139
			25500	2600	2.74				24000	2450	2.74	15 -	6185	- 25		B-104	B-120	B-139
			17200	**1750**	**1.04**				**16300**	**1660**	**1.04**	**15 -**	**6165**	**- 29**		**B-103**	**B-119**	**B-138**
			19800	2010	1.23				18700	1900	1.30	15 -	6170	- 29		B-103	B-119	B-138
			19800	2010	1.58				18700	1900	1.71	15 -	6175	- 29		B-103	B-119	B-138
50.0	2000	203	26600	2710	1.77	60.3	1650	169	25100	2560	1.77	15 -	6180	- 29		B-104	B-120	B-139
			26600	2710	2.19				25100	2560	2.19	15 -	6185	- 29		B-104	B-120	B-139
			37500	3830	2.79				35300	3600	2.79	15 -	6190	- 29		B-104	B-120	B-139
			18100	1840	0.87				17100	1750	1.04	15 -	6165	- 35		B-103	B-119	B-138
			20900	**2130**	**1.02**				**19700**	**2010**	**1.09**	**15 -**	**6170**	**- 35**		**B-103**	**B-119**	**B-138**
			20900	2130	1.31				19700	2010	1.37	15 -	6175	- 35		B-103	B-119	B-138
41.4	2410	246	28400	2890	1.68	50.0	2000	203	26700	2730	1.71	15 -	6180	- 35		B-104	B-120	B-139
			28400	2890	2.05				26700	2730	2.05	15 -	6185	- 35		B-104	B-120	B-139
			39600	4040	2.21				37300	3800	2.21	15 -	6190	- 35		B-104	B-120	B-139
			39600	4040	2.74				37300	3800	2.74	15 -	6195	- 35		B-104	B-120	B-139
			22100	**2250**	**1.03**				**20900**	**2130**	**1.03**	**15 -**	**6175**	**- 43**		**B-103**	**B-119**	**B-138**
			30300	3090	1.37				28600	2920	1.37	15 -	6180	- 43		B-104	B-120	B-139
			30300	3090	1.69				28600	2920	1.71	15 -	6185	- 43		B-104	B-120	B-139
33.7	2960	302	42600	4340	1.90	40.7	2450	250	40100	4090	1.90	15 -	6190	- 43		B-104	B-120	B-139
			42600	4340	2.46				40100	4090	2.74	15 -	6195	- 43		B-104	B-120	B-139
			77700	7920	2.89				73500	7500	2.89	15 -	6205	- 43		B-105	B-121	B-140

1. Combinations in **bold** are the recommended models for operations for 10 hours/day with uniform load (service factor is about 1.0 for motor rating at 50Hz).
2. Motor slippage may affect n_1 and n_2. Refer to technical data for details.
3. CNHM, CHHM, CNFM, CHFM, CNVM, and CVVM indicate types. Refer to page B-10 for details.
4. Lubrication method is different for each model. Refer to "Lubrication" section in page F-4~F-5 for details.
5. "6" at the end of "input capacity symbol" indicates models with 6P motor. Other models come with 4P motor.

Selection Tables Gearmotors

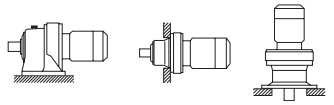

CHHM/CNHM CHFM/CNFM CVVM/CNVM

n1: Motor Speed

11 kW	Hz	50Hz		60Hz	
	P	4	6	4	6
	n1 r/min	1450	980	1750	1165

50Hz						60Hz						Nomenclature				Page of Dimension Sheet		
Output Speed n2 [r/min]	Output Torque Tout [N·m]	[kgf·m]	Allowable Radial Load Pro [N]	[kgf]	SF	Output Speed n2 [r/min]	Output Torque Tout [N·m]	[kgf·m]	Allowable Radial Load Pro [N]	[kgf]	SF	Input Capacity Symbol	- Frame Size	- Reduction Ratio		CNHM CHHM	CNFM CHFM	CNVM CVVM
			22900	2330	0.90				21700	2210	1.03	15 -	6175	- 51		B-103	B-119	B-138
			31300	**3200**	**1.09**				**29600**	**3010**	**1.09**	**15 -**	**6180**	**- 51**		**B-104**	**B-120**	**B-139**
28.4	3510	358	31300	3200	1.37	34.3	2910	296	29600	3010	1.37	15 -	6185	- 51		B-104	B-120	B-139
			44400	4530	1.65				41900	4270	1.65	15 -	6190	- 51		B-104	B-120	B-139
			44400	4530	1.90				41900	4270	1.90	15 -	6195	- 51		B-104	B-120	B-139
			32700	**3330**	**1.09**				**30900**	**3150**	**1.09**	**15 -**	**6185**	**- 59**		**B-104**	**B-120**	**B-139**
24.6	4060	414	46400	4730	1.39	29.7	3360	343	43700	4460	1.39	15 -	6190	- 59		B-104	B-120	B-139
			46400	4730	1.71				43700	4460	1.71	15 -	6195	- 59		B-104	B-120	B-139
			84100	8570	2.05				79900	8150	2.05	15 -	6205	- 59		B-105	B-121	B-140
			34500	3520	0.89				32700	3330	0.89	15 -	6185	- 71		B-104	B-120	B-139
20.4	4890	498	**49100**	**5010**	**1.23**	24.6	4050	413	**46300**	**4720**	**1.23**	**15 -**	**6190**	**- 71**		**B-104**	**B-120**	**B-139**
			49100	5010	1.42				46300	4720	1.42	15 -	6195	- 71		B-104	B-120	B-139
			52700	**5380**	**1.06**				**49700**	**5070**	**1.07**	**15 -**	**6190**	**- 87**		**B-104**	**B-120**	**B-139**
16.7	5990	610	52700	5380	1.24	20.1	4960	506	49700	5070	1.24	15 -	6195	- 87		B-104	B-120	B-139
			84100	8570	1.45				84100	8570	1.45	15 -	6205	- 87		B-105	B-121	B-140
			96600	9850	1.79				91500	9320	1.95	15 -	6215	- 87		B-106	B-121	B-140
	4060	414	40200	4100	*1		4060	414	37700	3840	*1	15 -	6180DB	- 104		B-111	B-127	B-146
13.9	4900	500	39900	4060	*1	16.8	4900	500	37300	3800	*1	15 -	6185DB	- 104		B-111	B-127	B-146
	6780	691	**55600**	**5670**	**1.08**		5620	573	**52500**	**5360**	**1.08**	**15 -**	**6195DB**	**- 104**		**B-112**	**B-128**	**B-147**
	4810	490	41700	4250	*1		4810	490	40000	4070	*1	15 -	6185DB	- 121		B-111	B-127	B-146
	6380	650	59000	6010	*1		6380	650	55900	5700	*1	15 -	6190DB	- 121		B-112	B-128	B-147
			59000	6010	0.96				55900	5700	1.08	15 -	6195DB	- 121		B-112	B-128	B-147
			84100	**8570**	**1.08**				**84100**	**8570**	**1.08**	**15 -**	**6205DB**	**- 121**		**B-112**	**B-129**	**B-148**
12.0			104000	10600	1.44	14.5			102000	10400	1.74	15 -	6215DB	- 121		B-113	B-130	B-149
	7890	804	114000	11600	1.71		6540	666	108000	11000	2.06	15 -	6225DB	- 121		B-113	B-130	B-149
			143000	14600	2.31				135000	13800	2.31	15 -	6235DA	- 121		B-114	B-131	B-150
			143000	14600	2.37				135000	13800	2.86	15 -	6235DB	- 121		B-114	B-131	B-150
			159000	16200	2.60				151000	15400	3.14	15 -	6245DB	- 121		B-114	B-131	B-150
			195000	19900	2.89				184000	18800	2.89	15 -	6255DA	- 121		B-115	B-132	B-151
	6380	650	58700	5980	*1		6380	650	58400	5950	*1	15 -	6190DB	- 143		B-112	B-128	B-147
10.1	7630	778	58200	5940	*1	12.2	7630	778	57900	5900	*1	15 -	6195DB	- 143		B-112	B-128	B-147
	9320	950	57600	5870	0.82		7730	788	57900	5900	0.98	15 -	6195DB	- 143		B-112	B-128	B-147
	6380	650	58900	6000	*1		6380	650	58900	6000	*1	15 -	6190DB	- 165		B-112	B-128	B-147
	7910	806	58300	5940	*1		7910	806	58300	5940	*1	15 -	6195DB	- 165		B-112	B-128	B-147
			84100	8570	0.86				84100	8570	1.04	15 -	6205DB	- 165		B-112	B-129	B-148
			104000	**10600**	**1.08**				**104000**	**10600**	**1.08**	**15 -**	**6215DA**	**- 165**		**B-112**	**B-130**	**B-148**
			104000	10600	1.13				104000	10600	1.37	15 -	6215DB	- 165		B-113	B-130	B-149
8.79			123000	12600	1.35	10.6			117000	11900	1.62	15 -	6225DB	- 165		B-113	B-130	B-149
	10800	1100	153000	15600	1.82		8910	909	145000	14800	2.20	15 -	6235DA	- 165		B-114	B-131	B-150
			171000	17400	2.31				162000	16500	2.31	15 -	6245DA	- 165		B-114	B-131	B-150
			171000	17400	2.44				162000	16500	2.94	15 -	6245DB	- 165		B-114	B-131	B-150
			209000	21300	2.89				198000	20200	2.89	15 -	6255DA	- 165		B-115	B-132	B-151
			209000	21300	2.90				198000	20200	3.50	15 -	6255DB	- 165		B-115	B-132	B-151
	7910	806	58300	5940	*1		7910	806	58300	5940	*1	15 -	6195DB	- 195		B-112	B-128	B-147
	9270	945	84100	8570	*1		9270	945	84100	8570	*1	15 -	6205DB	- 195		B-112	B-129	B-148
			104000	10600	0.96				104000	10600	1.08	15 -	6215DA	- 195		B-112	B-130	B-148
			104000	10600	0.96				104000	10600	1.16	15 -	6215DB	- 195		B-113	B-130	B-149
			129000	13200	0.98				122000	12500	1.08	15 -	6225DA	- 195		B-113	B-130	B-149
7.44			129000	13200	1.14	8.79			122000	12500	1.37	15 -	6225DB	- 195		B-113	B-130	B-149
	12700	1300	161000	16400	1.54		10500	1070	152000	15500	1.86	15 -	6235DA	- 195		B-114	B-131	B-150
			180000	18300	2.06				170000	17300	2.17	15 -	6245DA	- 195		B-114	B-131	B-150
			180000	18300	2.06				170000	17300	2.49	15 -	6245DB	- 195		B-114	B-131	B-150
			220000	22400	2.45				208000	21200	2.89	15 -	6255DA	- 195		B-115	B-132	B-151
			220000	22400	2.45				208000	21200	2.96	15 -	6255DB	- 195		B-115	B-132	B-151

6. "*2" indicate models manufactured with reducer and motor separately mounted on a common baseplate (horizontal shaft direction) or on an adaptor (vertical shaft direction). Consult us for details, including dimensions.
7. Allowable radial load (Pro) is the value at the midpoint of the slow speed shaft.
8. "*3" indicate models with reduction ratios equal to nominal ratio. Refer to Table A-3 "6000SK Series (Actual Reduction Ratio)" on page A-4 for actual reduction ratio. Indicated reduction ratio is the same as actual reduction ratio for other models.
9. Maintain torque load during operation within "Output torque" in the table for models with "*1" in the SF column. They cannot be operated with 100% motor rating.

Selection Tables Gearmotors

n_1: Motor Speed

11 kW	Hz	50Hz		60Hz	
	P	4	6	4	6
	n_1 r/min	1450	980	1750	1165

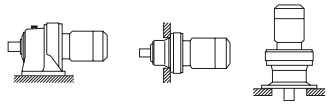

CHHM/CNHM CHFM/CNFM CVVM/CNVM

50Hz						60Hz						Nomenclature				Page of Dimension Sheet		
Output Speed n_2 [r/min]	Output Torque Tout [N·m]	[kgf·m]	Allowable Radial Load Pro [N]	[kgf]	SF	Output Speed n_2 [r/min]	Output Torque Tout [N·m]	[kgf·m]	Allowable Radial Load Pro [N]	[kgf]	SF	Input Capacity Symbol	-	Frame Size	- Reduction Ratio	CNHM CHHM	CNFM CHFM	CNVM CVVM
6.28	9270	945	84100	8570	*1	7.58	9270	945	84100	8570	*1	15 -		6205DB	- 231	B-112	B-129	B-148
	12500	1270	104000	10600	*1		12500	1270	104000	10600	*1	15 -		6215DA	- 231	B-112	B-130	B-148
	15100	1540	104000	10600	0.83		12500	1270	104000	10600	1.00	15 -		6215DA	- 231	B-112	B-130	B-148
			137000	14000	0.98				130000	13300	1.08	15 -		6225DA	- 231	B-113	B-130	B-149
			137000	14000	0.98				130000	13300	1.19	15 -		6225DB	- 231	B-113	B-130	B-149
			172000	17500	1.25				163000	16600	1.51	15 -		6235DA	- 231	B-114	B-131	B-150
			191000	19500	1.71				181000	18500	2.07	15 -		6245DA	- 231	B-114	B-131	B-150
			233000	23800	2.06				221000	22500	2.48	15 -		6255DA	- 231	B-115	B-132	B-151
5.31	12500	1270	104000	10600	*1	6.41	12500	1270	104000	10600	*1	15 -		6215DA	- 273	B-112	B-130	B-148
	14800	1510	145000	14700	*1		14800	1510	137000	13900	*1	15 -		6225DA	- 273	B-113	B-130	B-149
	17800	1810	144000	14700	0.83		14700	1500	137000	13900	1.00	15 -		6225DA	- 273	B-113	B-130	B-149
			179000	**18200**	**1.06**				**171000**	**17400**	**1.28**	**15 -**		**6235DA**	**- 273**	**B-114**	**B-131**	**B-150**
			201000	20500	1.45				190000	19400	1.75	15 -		6245DA	- 273	B-114	B-131	B-150
			245000	25000	1.74				232000	23600	2.10	15 -		6255DA	- 273	B-115	B-132	B-151
			276000	28100	2.58				276000	28100	3.12	15 -		6265DA	- 273	B-115	B-132	B-151
4.55	12700	1290	104000	10600	*1	5.49	12700	1290	104000	10600	*1	15 -		6215DA	- 319	B-112	B-130	B-148
	15000	1530	145000	14800	*1		15000	1530	142000	14500	*1	15 -		6225DA	- 319	B-113	B-130	B-149
	20800	2120	179000	18200	0.91		17200	1760	177000	18100	1.10	15 -		6235DA	- 319	B-114	B-131	B-150
			208000	21200	1.24				198000	20200	1.50	15 -		6245DA	- 319	B-114	B-131	B-150
			258000	26300	1.56				244000	24900	1.88	15 -		6255DA	- 319	B-115	B-132	B-151
			276000	28100	2.21				276000	28100	2.67	15 -		6265DA	- 319	B-115	B-132	B-151
3.85	15000	1530	145000	14800	*1	4.64	15000	1530	145000	14800	*1	15 -		6225DA	- 377	B-113	B-130	B-149
	18900	1930	179000	18200	*1		18900	1930	179000	18200	*1	15 -		6235DA	- 377	B-114	B-131	B-150
	24600	2510	**208000**	**21200**	**1.05**		20400	2080	**208000**	**21200**	**1.27**	**15 -**		**6245DA**	**- 377**	**B-114**	**B-131**	**B-150**
			258000	26300	1.32				256000	26100	1.59	15 -		6255DA	- 377	B-115	B-132	B-151
			276000	28100	1.87				276000	28100	2.26	15 -		6265DA	- 377	B-115	B-132	B-151
			248000	25300	2.77				248000	25300	3.35	15 -		6275DA	- 377	B-115	-	B-151
3.07	20500	2090	179000	18200	*1	3.70	20500	2090	179000	18200	*1	15 -		6235DA	- 473	B-114	B-131	B-150
	30800	3140	208000	21200	0.84		25600	2600	208000	21200	1.01	15 -		6245DA	- 473	B-114	B-131	B-150
			258000	26300	1.12				258000	26300	1.35	15 -		6255DA	- 473	B-115	B-132	B-151
			276000	28100	1.49				276000	28100	1.80	15 -		6265DA	- 473	B-115	B-132	B-151
			248000	25300	2.21				248000	25300	2.67	15 -		6275DA	- 473	B-115	-	B-151
2.59	25800	2630	208000	21200	*1	3.13	25800	2630	208000	21200	*1	15 -		6245DA	- 559	B-114	B-131	B-150
	36400	3720	258000	26300	0.95		30200	3080	258000	26300	1.14	15 -		6255DA	- 559	B-115	B-132	B-151
			276000	28100	1.26				276000	28100	1.52	15 -		6265DA	- 559	B-115	B-132	B-151
			248000	25300	1.87				248000	25300	2.26	15 -		6275DA	- 559	B-115	-	B-151
2.23	25800	2630	208000	21200	*1	2.70	25800	2630	208000	21200	*1	15 -		6245DA	- 649	B-114	B-131	B-150
	34500	3520	258000	26300	*1		34500	3520	258000	26300	*1	15 -		6255DA	- 649	B-115	B-132	B-151
	42300	4310	258000	26300	0.82		35100	3570	258000	26300	0.98	15 -		6255DA	- 649	B-115	B-132	B-151
			276000	28100	1.09				276000	28100	1.31	15 -		6265DA	- 649	B-115	B-132	B-151
			248000	25300	1.61				248000	25300	1.95	15 -		6275DA	- 649	B-115	-	B-151
1.98	34500	3520	258000	26300	*1	2.39	34500	3520	258000	26300	*1	15 -		6255DA	- 731	B-115	B-132	B-151
	47700	4860	276000	28100	0.97		39500	4030	276000	28100	1.16	15 -		6265DA	- 731	B-115	B-132	B-151
			248000	25300	1.43				248000	25300	1.73	15 -		6275DA	- 731	B-115	-	B-151
1.72	32500	3310	258000	26300	*1	2.08	32500	3310	258000	26300	*1	15 -		6255DA	- 841	B-115	B-132	B-151
	54800	5590	276000	28100	0.84		45400	4630	276000	28100	1.01	15 -		6265DA	- 841	B-115	B-132	B-151
			248000	25300	1.24				248000	25300	1.50	15 -		6275DA	- 841	B-115	-	B-151
1.45	46000	4690	276000	28100	*1	1.74	46000	4690	276000	28100	*1	15 -		6265DA	- 1003	B-115	B-132	B-151
	65400	6670	**248000**	**25300**	**1.04**		54200	5520	**248000**	**25300**	**1.26**	**15 -**		**6275DA**	**- 1003**	**B-115**	**-**	**B-151**
1.16	81300	8290	248000	25300	0.84	1.40	67400	6870	248000	25300	1.01	15 -		6275DA	- 1247	B-115	-	B-151
0.980	68200	6950	245000	25000	*1	1.18	68200	6950	245000	25000	*1	15 -		6275DA	- 1479	B-115	-	B-151

1. Combinations in **bold** are the recommended models for operations for 10 hours/day with uniform load (service factor is about 1.0 for motor rating at 50Hz).
2. Motor slippage may affect n_1 and n_2. Refer to technical data for details.
3. CNHM, CHHM, CNFM, CHFM, CNVM, and CVVM indicate types. Refer to page B-10 for details.
4. Lubrication method is different for each model. Refer to "Lubrication" section in page F-4~F-5 for details.
5. "6" at the end of "input capacity symbol" indicates models with 6P motor. Other models come with 4P motor.

Selection Tables Gearmotors

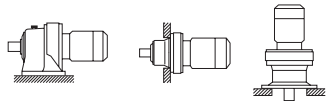

CHHM/CNHM CHFM/CNFM CVVM/CNVM

15 kW

n_1: Motor Speed

Hz	50Hz		60Hz	
P	4	6	4	6
n_1 r/min	1450	980	1750	1165

50Hz						60Hz						Nomenclature				Page of Dimension Sheet		
Output Speed n_2 [r/min]	Output Torque Tout [N·m]	[kgf·m]	Allowable Radial Load Pro [N]	[kgf]	SF	Output Speed n_2 [r/min]	Output Torque Tout [N·m]	[kgf·m]	Allowable Radial Load Pro [N]	[kgf]	SF	Input Capacity Symbol	- Frame Size	- Reduction Ratio		CNHM CHHM	CNFM CHFM	CNVM CVVM
			9200	**938**	**1.01**				**8730**	**889**	**1.01**	**20 -**	**6145**	**- 6**		**B-102**	**B-118**	**B-137**
			10200	1040	1.35				9670	986	1.35	20 -	6160	- 6		B-103	B-119	B-138
242	563	57.4	10200	1040	1.61	292	467	47.6	9670	986	1.61	20 -	6165	- 6		B-103	B-119	B-138
			11600	1180	1.84				10900	1110	1.84	20 -	6170	- 6		B-103	B-119	B-138
			11600	1180	2.01				10900	1110	2.01	20 -	6175	- 6		B-103	B-119	B-138
			10200	**1040**	**1.01**				**9660**	**984**	**1.01**	**20 -**	**6145**	**- 8**		**B-102**	**B-118**	**B-137**
			11400	1170	1.31				10800	1100	1.31	20 -	6160	- 8		B-103	B-119	B-138
181	751	76.5	11400	1170	1.61	219	622	63.4	10800	1100	1.61	20 -	6165	- 8		B-103	B-119	B-138
			12800	1310	1.84				12100	1230	1.84	20 -	6170	- 8		B-103	B-119	B-138
			12800	1310	2.01				12100	1230	2.01	20 -	6175	- 8		B-103	B-119	B-138
			11400	**1160**	**1.01**				**10800**	**1100**	**1.01**	**20 -**	**6145**	**- 11**		**B-102**	**B-118**	**B-137**
			12900	1320	1.31				12200	1240	1.31	20 -	6160	- 11		B-103	B-119	B-138
			12900	1320	1.61				12200	1240	1.61	20 -	6165	- 11		B-103	B-119	B-138
			14700	1500	1.84				13900	1420	1.84	20 -	6170	- 11		B-103	B-119	B-138
132	1030	105	14700	1500	2.01	159	855	87.2	13900	1420	2.01	20 -	6175	- 11		B-103	B-119	B-138
			19600	2000	2.35				18500	1880	2.35	20 -	6180	- 11		B-104	B-120	B-139
			19600	2000	2.60				18500	1880	2.60	20 -	6185	- 11		B-104	B-120	B-139
			27500	2800	2.73				25800	2630	2.73	20 -	6190	- 11		B-104	B-120	B-139
			11600	**1190**	**1.01**				**11000**	**1130**	**1.01**	**20 -**	**6145**	**- 13**		**B-102**	**B-118**	**B-137**
			13500	1370	1.31				12700	1300	1.31	20 -	6160	- 13		B-103	B-119	B-138
			13500	1370	1.51				12700	1300	1.51	20 -	6165	- 13		B-103	B-119	B-138
			15300	1560	1.82				14500	1470	1.82	20 -	6170	- 13		B-103	B-119	B-138
112	1220	124	15300	1560	2.01	135	1010	103	14500	1470	2.01	20 -	6175	- 13		B-103	B-119	B-138
			20400	2080	2.35				19200	1960	2.35	20 -	6180	- 13		B-104	B-120	B-139
			20400	2080	2.60				19200	1960	2.60	20 -	6185	- 13		B-104	B-120	B-139
			28600	2910	2.73				26900	2740	2.73	20 -	6190	- 13		B-104	B-120	B-139
			12100	1240	0.97				11500	1170	1.01	20 -	6145	- 15		B-102	B-118	B-137
			14200	**1450**	**1.25**				**13500**	**1370**	**1.25**	**20 -**	**6160**	**- 15**		**B-103**	**B-119**	**B-138**
			14200	1450	1.49				13500	1370	1.51	20 -	6165	- 15		B-103	B-119	B-138
			16100	1640	1.70				15200	1550	1.70	20 -	6170	- 15		B-103	B-119	B-138
96.7	1410	144	16100	1640	2.01	117	1170	119	15200	1550	2.01	20 -	6175	- 15		B-103	B-119	B-138
			21600	2200	2.16				20300	2070	2.16	20 -	6180	- 15		B-104	B-120	B-139
			21600	2200	2.60				20300	2070	2.60	20 -	6185	- 15		B-104	B-120	B-139
			30000	3060	2.73				28200	2880	2.73	20 -	6190	- 15		B-104	B-120	B-139
			12600	1290	0.80				12000	1220	0.80	20 -	6145	- 17		B-102	B-118	B-137
			14600	**1490**	**1.25**				**13900**	**1410**	**1.25**	**20 -**	**6165**	**- 17**		**B-103**	**B-119**	**B-138**
			16700	1700	1.31				15800	1610	1.31	20 -	6170	- 17		B-103	B-119	B-138
85.3	1600	163	16700	1700	1.61	103	1320	135	15800	1610	1.61	20 -	6175	- 17		B-103	B-119	B-138
			22700	2320	2.04				21400	2180	2.04	20 -	6180	- 17		B-104	B-120	B-139
			22700	2320	2.55				21400	2180	2.60	20 -	6185	- 17		B-104	B-120	B-139
			31600	3220	2.73				29800	3030	2.73	20 -	6190	- 17		B-104	B-120	B-139
			15600	**1590**	**1.07**				**14800**	**1510**	**1.07**	**20 -**	**6165**	**- 21**		**B-103**	**B-119**	**B-138**
			17900	1830	1.24				17000	1730	1.30	20 -	6170	- 21		B-103	B-119	B-138
69.0	1970	201	17900	1830	1.57	83.3	1630	166	17000	1730	1.61	20 -	6175	- 21		B-103	B-119	B-138
			24300	2480	2.00				22900	2340	2.00	20 -	6180	- 21		B-104	B-120	B-139
			24300	2480	2.54				22900	2340	2.60	20 -	6185	- 21		B-104	B-120	B-139
			34000	3470	2.73				32000	3260	2.73	20 -	6190	- 21		B-104	B-120	B-139
			16200	1650	0.89				15400	1570	1.01	20 -	6165	- 25		B-103	B-119	B-138
			18500	**1890**	**1.04**				**17500**	**1780**	**1.05**	**20 -**	**6170**	**- 25**		**B-103**	**B-119**	**B-138**
			18500	1890	1.30				17500	1780	1.30	20 -	6175	- 25		B-103	B-119	B-138
58.0	2350	239	25300	2580	1.61	70.0	1940	198	23800	2430	1.61	20 -	6180	- 25		B-104	B-120	B-139
			25300	2580	2.01				23800	2430	2.01	20 -	6185	- 25		B-104	B-120	B-139
			35600	3620	2.35				33500	3410	2.35	20 -	6190	- 25		B-104	B-120	B-139
			35600	3620	2.70				33500	3410	2.70	20 -	6195	- 25		B-104	B-120	B-139

6. "*2" indicate models manufactured with reducer and motor separately mounted on a common baseplate (horizontal shaft direction) or on an adaptor (vertical shaft direction). Consult us for details, including dimensions.
7. Allowable radial load (Pro) is the value at the midpoint of the slow speed shaft.
8. "*3" indicate models with reduction ratios equal to nominal ratio. Refer to Table A-3 "6000SK Series (Actual Reduction Ratio)" on page A-4 for actual reduction ratio. Indicated reduction ratio is the same as actual reduction ratio for other models.
9. Maintain torque load during operation within "Output torque" in the table for models with "*1" in the SF column. They cannot be operated with 100% motor rating.

Selection Tables Gearmotors

n_1: Motor Speed

15 kW	Hz		50Hz		60Hz	
	P		4	6	4	6
	n_1	r/min	1450	980	1750	1165

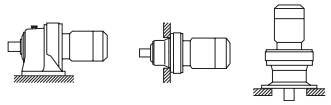

CHHM/CNHM CHFM/CNFM CVVM/CNVM

50Hz						60Hz						Nomenclature			Page of Dimension Sheet		
Output Speed n_2 [r/min]	Output Torque Tout [N·m]	[kgf·m]	Allowable Radial Load Pro [N]	[kgf]	SF	Output Speed n_2 [r/min]	Output Torque Tout [N·m]	[kgf·m]	Allowable Radial Load Pro [N]	[kgf]	SF	Input Capacity Symbol	- Frame Size	- Reduction Ratio	CNHM CHHM	CNFM CHFM	CNVM CVVM
			19400	**1980**	**1.16**				**18400**	**1870**	**1.25**	**20 -**	**6175**	**- 29**	**B-103**	**B-119**	**B-138**
			26400	2690	1.30				24900	2540	1.30	20 -	6180	- 29	B-104	B-120	B-139
50.0	2720	277	26400	2690	1.61	60.3	2260	230	24900	2540	1.61	20 -	6185	- 29	B-104	B-120	B-139
			37400	3810	2.05				35200	3580	2.05	20 -	6190	- 29	B-104	B-120	B-139
			37400	3810	2.52				35200	3580	2.52	20 -	6195	- 29	B-104	B-120	B-139
			20400	2080	0.96				19400	1970	1.01	20 -	6175	- 35	B-103	B-119	B-138
			28100	**2860**	**1.23**				**26500**	**2700**	**1.25**	**20 -**	**6180**	**- 35**	**B-104**	**B-120**	**B-139**
41.4	3280	335	28100	2860	1.51	50.0	2720	277	26500	2700	1.51	20 -	6185	- 35	B-104	B-120	B-139
			39400	4020	1.62				37100	3780	1.62	20 -	6190	- 35	B-104	B-120	B-139
			39400	4020	2.01				37100	3780	2.01	20 -	6195	- 35	B-104	B-120	B-139
			29900	**3050**	**1.01**				**28300**	**2880**	**1.01**	**20 -**	**6180**	**- 43**	**B-104**	**B-120**	**B-139**
			29900	3050	1.24				28300	2880	1.25	20 -	6185	- 43	B-104	B-120	B-139
33.7	4040	411	42300	4310	1.39	40.7	3340	341	39900	4060	1.39	20 -	6190	- 43	B-104	B-120	B-139
			42300	4310	1.81				39900	4060	2.01	20 -	6195	- 43	B-104	B-120	B-139
			77500	7900	2.12				73300	7480	2.12	20 -	6205	- 43	B-105	B-121	B-140
			30900	**3150**	**1.01**				**29200**	**2980**	**1.01**	**20 -**	**6185**	**- 51**	**B-104**	**B-120**	**B-139**
28.4	4790	488	44100	4490	1.21	34.3	3970	404	41500	4230	1.21	20 -	6190	- 51	B-104	B-120	B-139
			44100	4490	1.39				41500	4230	1.39	20 -	6195	- 51	B-104	B-120	B-139
			32100	3270	0.80				30400	3100	0.80	20 -	6185	- 59	B-104	B-120	B-139
			46000	**4690**	**1.02**				**43400**	**4430**	**1.02**	**20 -**	**6190**	**- 59**	**B-104**	**B-120**	**B-139**
24.6	5540	564	46000	4690	1.25	29.7	4590	468	43400	4430	1.25	20 -	6195	- 59	B-104	B-120	B-139
			84100	8570	1.51				79700	8120	1.51	20 -	6205	- 59	B-105	B-121	B-140
			85900	8760	2.26				81300	8290	2.51	20 -	6215	- 59	B-105	B-121	B-140
20.4	6660	679	**48600**	**4960**	**1.04**	24.6	5520	563	**45900**	**4680**	**1.04**	**20 -**	**6195**	**- 71**	**B-104**	**B-120**	**B-139**
			52100	5310	0.91				49200	5010	0.91	20 -	6195	- 87	B-104	B-120	B-139
16.7	8170	832	**84100**	**8570**	**1.06**	20.1	6770	690	**84100**	**8570**	**1.06**	**20 -**	**6205**	**- 87**	**B-105**	**B-121**	**B-140**
			96100	9790	1.31				91000	9280	1.43	20 -	6215	- 87	B-105	B-121	B-140
			102000	10400	1.78				96400	9830	1.78	20 -	6225	- 87*2	B-106	B-122	B-141
			84100	8570	1.13				84100	8570	1.30	206-	6205	- 59	B-105	B-121	B-140
16.6	8190	835	96200	9800	1.55	19.7	6890	703	91500	9330	1.83	206-	6215	- 59	B-105	B-121	B-140
			102000	10400	1.94				97000	9890	2.22	206-	6225	- 59	B-106	B-122	B-141
	6380	650	55800	5690	*1		6090	621	52400	5340	*1	20 -	6190DB	- 104	B-112	B-128	B-147
13.9	7350	750	55400	5650	*1	16.8	6090	621	52400	5340	*1	20 -	6195DB	- 104	B-112	B-128	B-147
	9250	943	54700	5580	0.80		7660	781	51800	5280	0.80	20 -	6195DB	- 104	B-112	B-128	B-147
	7580	773	59000	6010	*1		7090	723	55700	5680	*1	20 -	6195DB	- 121	B-112	B-128	B-147
	8560	872	84100	8570	*1		7090	723	84100	8570	*1	20 -	6205DB	- 121	B-112	B-129	B-148
			84100	8570	0.80				84100	8570	0.80	20 -	6205DB	- 121	B-112	B-129	B-148
			104000	**10600**	**1.06**				**101000**	**10300**	**1.28**	**20 -**	**6215DB**	**- 121**	**B-113**	**B-129**	**B-149**
			113000	11600	1.25				108000	11000	1.51	20 -	6225DB	- 121	B-113	B-130	B-149
12.0			142000	14500	1.69	14.5			135000	13800	1.69	20 -	6235DA	- 121	B-114	B-114	B-150
	10800	1100	142000	14500	1.74		8910	909	135000	13800	2.10	20 -	6235DB	- 121	B-114	B-114	B-150
			159000	16200	1.91				150000	15300	2.30	20 -	6245DB	- 121	B-114	B-114	B-150
			194000	19800	2.12				184000	18700	2.12	20 -	6255DA	- 121	B-115	B-132	B-151
			194000	19800	2.56				184000	18700	3.08	20 -	6255DB	- 121	B-115	B-132	B-151
			237000	24200	2.91				225000	22900	3.38	20 -	6265DA	- 121	B-115	B-132	B-151
			114000	11600	1.25				108000	11000	1.48	206-	6225	- 87	B-106	B-122	B-141
			142000	14500	1.42				135000	13800	1.60	206-	6235	- 87	B-106	B-122	B-141
11.3	12100	1230	159000	16200	1.87	13.4	10200	1040	151000	15400	2.14	206-	6245	- 87	B-107	B-123	B-142
			196000	19900	2.57				186000	19000	2.86	206-	6255	- 87	B-107	B-123	B-142

1. Combinations in **bold** are the recommended models for operations for 10 hours/day with uniform load (service factor is about 1.0 for motor rating at 50Hz).
2. Motor slippage may affect n_1 and n_2. Refer to technical data for details.
3. CNHM, CHHM, CNFM, CHFM, CNVM, and CVVM indicate types. Refer to page B-10 for details.
4. Lubrication method is different for each model. Refer to "Lubrication" section in page F-4~F-5 for details.
5. "6" at the end of "input capacity symbol" indicates models with 6P motor. Other models come with 4P motor.

Selection Tables Gearmotors

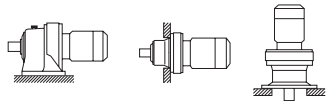

CHHM/CNHM CHFM/CNFM CVVM/CNVM

n_1: Motor Speed

15 kW	Hz	50Hz		60Hz	
	P	4	6	4	6
	n_1 r/min	1450	980	1750	1165

50Hz						60Hz						Nomenclature	Page of Dimension Sheet		
Output Speed n_2 [r/min]	Output Torque Tout [N·m]	[kgf·m]	Allowable Radial Load Pro [N]	[kgf]	SF	Output Speed n_2 [r/min]	Output Torque Tout [N·m]	[kgf·m]	Allowable Radial Load Pro [N]	[kgf]	SF	Input Capacity Symbol - Frame Size - Reduction Ratio	CNHM CHHM	CNFM CHFM	CNVM CVVM
	9270	945	84100	8570	*1		9270	945	84100	8570	*1	20 - 6205DB - 165	B-112	B-129	B-148
	11700	1190	104000	10600	*1		9670	985	104000	10600	*1	20 - 6215DA - 165	B-112	B-129	B-148
			104000	10600	0.80				104000	10600	0.80	20 - 6215DA - 165	B-112	B-129	B-148
			104000	10600	0.83				104000	10600	1.00	20 - 6215DB - 165	B-113	B-129	B-149
			122000	12500	0.98				116000	11800	1.19	20 - 6225DB - 165	B-113	B-130	B-149
8.79			152000	15500	1.34	10.6			144000	14700	1.61	20 - 6235DA - 165	B-114	B-114	B-150
	14700	1500	170000	17400	1.69		12200	1240	161000	16400	1.69	20 - 6245DA - 165	B-114	B-114	B-150
			170000	17400	1.79				161000	16400	2.16	20 - 6245DB - 165	B-114	B-114	B-150
			209000	21300	2.12				197000	20100	2.12	20 - 6255DA - 165	B-115	B-132	B-151
			209000	21300	2.12				197000	20100	2.56	20 - 6255DB - 165	B-115	B-132	B-151
			254000	25900	2.98				241000	24500	3.38	20 - 6265DA - 165	B-115	B-132	B-151
	12200	1240	104000	10600	*1		11400	1160	104000	10600	*1	20 - 6215DA - 195	B-112	B-129	B-148
	12500	1270	129000	13200	*1		11400	1160	122000	12500	*1	20 - 6225DA - 195	B-113	B-113	B-149
			128000	13100	0.84				122000	12400	1.01	20 - 6225DB - 195	B-113	B-130	B-149
			160000	16300	1.13				151000	15400	1.37	20 - 6235DA - 195	B-114	B-114	B-150
7.44			179000	18200	1.51	8.97			169000	17200	1.59	20 - 6245DA - 195	B-114	B-114	B-150
	17300	1770	179000	18200	1.51		14400	1460	169000	17200	1.83	20 - 6245DB - 195	B-114	B-114	B-150
			219000	22300	1.80				207000	21100	2.12	20 - 6255DA - 195	B-115	B-132	B-151
			219000	22300	1.80				207000	21100	2.17	20 - 6255DB - 195	B-115	B-132	B-151
			267000	27200	2.52				253000	25800	3.04	20 - 6265DA - 195	B-115	B-132	B-151
	14800	1510	137000	14000	*1		13500	1380	130000	13200	*1	20 - 6225DA - 231	B-113	B-113	B-149
			171000	17400	0.92				162000	16500	1.11	20 - 6235DA - 231	B-114	B-114	B-150
6.28	20500	2090	190000	19400	1.26	7.58	17000	1730	180000	18400	1.52	20 - 6245DA - 231	B-114	B-114	B-150
			232000	23700	1.51				220000	22400	1.82	20 - 6255DA - 231	B-115	B-132	B-151
			276000	28100	2.24				269000	27400	2.70	20 - 6265DA - 231	B-115	B-132	B-151
	18900	1930	179000	18200	*1		18900	1930	170000	17300	*1	20 - 6235DA - 273	B-114	B-114	B-150
5.31			**200000**	**20300**	**1.06**	6.41			**189000**	**19300**	**1.28**	**20 - 6245DA - 273**	**B-114**	**B-114**	**B-150**
	24300	2470	244000	24900	1.28		20100	2050	231000	23500	1.54	20 - 6255DA - 273	B-115	B-132	B-151
			276000	28100	1.90				276000	28100	2.29	20 - 6265DA - 273	B-115	B-132	B-151
	18900	1930	179000	18200	*1		18900	1930	177000	18100	*1	20 - 6235DA - 319	B-114	B-114	B-150
			208000	21200	0.91				197000	20100	1.10	20 - 6245DA - 319	B-114	B-114	B-150
4.55	28400	2890	256000	26100	1.14	5.49	23500	2400	243000	24800	1.38	20 - 6255DA - 319	B-115	B-132	B-151
			276000	28100	1.62				276000	28100	1.96	20 - 6265DA - 319	B-115	B-132	B-151
			248000	25300	2.40				248000	25300	2.90	20 - 6275DA - 319	B-115	-	B-151
	25800	2630	208000	21200	*1		25800	2630	207000	21100	*1	20 - 6245DA - 377	B-114	B-114	B-150
			258000	26300	0.97				255000	26000	1.17	20 - 6255DA - 377	B-115	B-132	B-151
3.85	33500	3420	276000	28100	1.37	4.64	27800	2830	276000	28100	1.66	20 - 6265DA - 377	B-115	B-132	B-151
			248000	25300	2.03				248000	25300	2.46	20 - 6275DA - 377	B-115	-	B-151
	25800	2630	208000	21200	*1		25800	2630	208000	21200	*1	20 - 6245DA - 473	B-114	B-114	B-150
	34500	3520	258000	26300	*1		34500	3520	258000	26300	*1	20 - 6255DA - 473	B-115	B-132	B-151
			258000	26300	0.82				258000	26300	0.98	20 - 6255DA - 473	B-115	B-132	B-151
3.07	42100	4290	258000	26300	0.82	3.70	34800	3550	258000	26300	0.98	20 - 6255DB - 473	B-115	B-132	B-151
			276000	28100	1.09				276000	28100	1.32	20 - 6265DA - 473	B-115	B-132	B-151
			248000	25300	1.62				248000	25300	1.96	20 - 6275DA - 473	B-115	-	B-151
	34500	3520	258000	26300	*1		34500	3520	258000	26300	*1	20 - 6255DA - 559	B-115	B-132	B-151
2.59	49700	5070	276000	28100	0.93	3.13	41200	4200	276000	28100	1.12	20 - 6265DA - 559	B-115	B-132	B-151
			248000	25300	1.37				248000	25300	1.66	20 - 6275DA - 559	B-115	-	B-151
	46000	4690	276000	28100	*1		46000	4690	276000	28100	*1	20 - 6265DA - 649	B-115	B-132	B-151
2.23	57700	5880	276000	28100	0.80	2.70	47800	4870	276000	28100	0.96	20 - 6265DA - 649	B-115	B-132	B-151
			248000	25300	1.18				248000	25300	1.43	20 - 6275DA - 649	B-115	-	B-151
1.98	46000	4690	276000	28100	*1	2.39	46000	4690	276000	28100	*1	20 - 6265DA - 731	B-115	B-132	B-151
	65000	6630	**248000**	**25300**	**1.05**		53900	5490	**248000**	**25300**	**1.27**	**20 - 6275DA - 731**	**B-115**	**-**	**B-151**
1.72	46000	4690	276000	28100	*1	2.08	46000	4690	276000	28100	*1	20 - 6265DA - 841	B-115	B-132	B-151
	74800	7620	248000	25300	0.91		62000	6320	248000	25300	1.10	20 - 6275DA - 841	B-115	-	B-151
1.45	68200	6950	248000	25300	*1	1.74	68200	6950	248000	25300	*1	20 - 6275DA - 1003	B-115	-	B-151
1.16	68200	6950	248000	25300	*1	1.40	68200	6950	248000	25300	*1	20 - 6275DA - 1247	B-115	-	B-151

6. "*2" indicate models manufactured with reducer and motor separately mounted on a common baseplate (horizontal shaft direction) or on an adaptor (vertical shaft direction). Consult us for details, including dimensions.
7. Allowable radial load (Pro) is the value at the midpoint of the slow speed shaft.
8. "*3" indicate models with reduction ratios equal to nominal ratio. Refer to Table A-3 "6000SK Series (Actual Reduction Ratio)" on page A-4 for actual reduction ratio. Indicated reduction ratio is the same as actual reduction ratio for other models.
9. Maintain torque load during operation within "Output torque" in the table for models with "*1" in the SF column. They cannot be operated with 100% motor rating.

Selection Tables Gearmotors

n_1: Motor Speed

18.5 kW	Hz		50Hz		60Hz	
	P		4	6	4	6
	n_1	r/min	1450	980	1750	1165

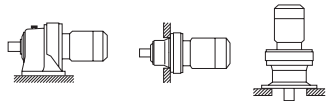

CHHM/CNHM CHFM/CNFM CVVM/CNVM

50Hz						60Hz						Nomenclature			Page of Dimension Sheet		
Output Speed n_2 [r/min]	Output Torque Tout [N·m]	[kgf·m]	Allowable Radial Load Pro [N]	[kgf]	SF	Output Speed n_2 [r/min]	Output Torque Tout [N·m]	[kgf·m]	Allowable Radial Load Pro [N]	[kgf]	SF	Input Capacity Symbol	Frame Size	Reduction Ratio	CNHM CHHM	CNFM CHFM	CNVM CVVM
242	695	70.8	**10200**	**1030**	**1.10**	292	575	58.7	**9590**	**978**	**1.10**	**25 -**	**6160**	**- 6**	**B-103**	**B-119**	**B-138**
			10200	1030	1.30				9590	978	1.30	25 -	6165	- 6	B-103	B-119	B-138
			11500	1180	1.49				10900	1110	1.49	25 -	6170	- 6	B-103	B-119	B-138
			11500	1180	1.63				10900	1110	1.63	25 -	6175	- 6	B-103	B-119	B-138
181	926	94.4	**11300**	**1150**	**1.06**	219	767	78.2	**10700**	**1090**	**1.06**	**25 -**	**6160**	**- 8**	**B-103**	**B-119**	**B-138**
			11300	1150	1.30				10700	1090	1.30	25 -	6165	- 8	B-103	B-119	B-138
			12700	1300	1.49				12000	1220	1.49	25 -	6170	- 8	B-103	B-119	B-138
			12700	1300	1.63				12000	1220	1.63	25 -	6175	- 8	B-103	B-119	B-138
132	1270	130	**12700**	**1300**	**1.06**	159	1060	108	**12100**	**1230**	**1.06**	**25 -**	**6160**	**- 11**	**B-103**	**B-119**	**B-138**
			12700	1300	1.30				12100	1230	1.30	25 -	6165	- 11	B-103	B-119	B-138
			14600	1490	1.49				13800	1410	1.49	25 -	6170	- 11	B-103	B-119	B-138
			14600	1490	1.63				13800	1410	1.63	25 -	6175	- 11	B-103	B-119	B-138
			19500	1990	1.90				18400	1880	1.90	25 -	6180	- 11	B-104	B-120	B-139
			19500	1990	2.11				18400	1880	2.11	25 -	6185	- 11	B-104	B-120	B-139
			27400	2790	2.22				25800	2630	2.22	25 -	6190	- 11	B-104	B-120	B-139
			27400	2790	2.60				25800	2630	2.60	25 -	6195	- 11	B-104	B-120	B-139
112	1500	153	**13300**	**1350**	**1.06**	135	1250	127	**12600**	**1280**	**1.06**	**25 -**	**6160**	**- 13**	**B-103**	**B-119**	**B-138**
			13300	1350	1.22				12600	1280	1.22	25 -	6165	- 13	B-103	B-119	B-138
			15200	1550	1.48				14300	1460	1.48	25 -	6170	- 13	B-103	B-119	B-138
			15200	1550	1.63				14300	1460	1.63	25 -	6175	- 13	B-103	B-119	B-138
			20300	2070	1.90				19100	1950	1.90	25 -	6180	- 13	B-104	B-120	B-139
			20300	2070	2.11				19100	1950	2.11	25 -	6185	- 13	B-104	B-120	B-139
			28500	2900	2.22				26800	2730	2.22	25 -	6190	- 13	B-104	B-120	B-139
			28500	2900	2.60				26800	2730	2.60	25 -	6195	- 13	B-104	B-120	B-139
96.7	1740	177	**14000**	**1430**	**1.01**	117	1440	147	**13300**	**1350**	**1.01**	**25 -**	**6160**	**- 15**	**B-103**	**B-119**	**B-138**
			14000	1430	1.21				13300	1350	1.22	25 -	6165	- 15	B-103	B-119	B-138
			15800	1620	1.38				15000	1530	1.38	25 -	6170	- 15	B-103	B-119	B-138
			15800	1620	1.63				15000	1530	1.63	25 -	6175	- 15	B-103	B-119	B-138
			21400	2180	1.75				20200	2060	1.75	25 -	6180	- 15	B-104	B-120	B-139
			21400	2180	2.11				20200	2060	2.11	25 -	6185	- 15	B-104	B-120	B-139
			29900	3050	2.22				28100	2870	2.22	25 -	6190	- 15	B-104	B-120	B-139
			29900	3050	2.60				28100	2870	2.60	25 -	6195	- 15	B-104	B-120	B-139
85.3	1970	201	**14400**	**1460**	**1.02**	103	1630	166	**13600**	**1390**	**1.02**	**25 -**	**6165**	**- 17**	**B-103**	**B-119**	**B-138**
			16500	1680	1.06				15600	1590	1.06	25 -	6170	- 17	B-103	B-119	B-138
			16500	1680	1.30				15600	1590	1.30	25 -	6175	- 17	B-103	B-119	B-138
			22600	2300	1.65				21300	2170	1.65	25 -	6180	- 17	B-104	B-120	B-139
			22600	2300	2.06				21300	2170	2.11	25 -	6185	- 17	B-104	B-120	B-139
			31500	3210	2.22				29700	3020	2.22	25 -	6190	- 17	B-104	B-120	B-139
			31500	3210	2.60				29700	3020	2.60	25 -	6195	- 17	B-104	B-120	B-139
69.0	2430	248	15300	1550	0.86	83.3	2010	205	14500	1480	0.87	25 -	6165	- 21	B-103	B-119	B-138
			17700	**1800**	**1.01**				**16800**	**1710**	**1.05**	**25 -**	**6170**	**- 21**	**B-103**	**B-119**	**B-138**
			17700	1800	1.28				16800	1710	1.30	25 -	6175	- 21	B-103	B-119	B-138
			24200	2470	1.62				22800	2330	1.62	25 -	6180	- 21	B-104	B-120	B-139
			24200	2470	2.06				22800	2330	2.11	25 -	6185	- 21	B-104	B-120	B-139
			33900	3450	2.22				31900	3250	2.22	25 -	6190	- 21	B-104	B-120	B-139
			33900	3450	2.60				31900	3250	2.60	25 -	6195	- 21	B-104	B-120	B-139
58.0	2890	295	**18200**	**1860**	**1.05**	70.0	2400	244	**17300**	**1760**	**1.05**	**25 -**	**6175**	**- 25**	**B-103**	**B-119**	**B-138**
			25100	2560	1.30				23700	2410	1.30	25 -	6180	- 25	B-104	B-120	B-139
			25100	2560	1.63				23700	2410	1.63	25 -	6185	- 25	B-104	B-120	B-139
			35400	3610	1.90				33300	3400	1.90	25 -	6190	- 25	B-104	B-120	B-139
			35400	3610	2.19				33300	3400	2.19	25 -	6195	- 25	B-104	B-120	B-139

1. Combinations in **bold** are the recommended models for operations for 10 hours/day with uniform load (service factor is about 1.0 for motor rating at 50Hz).
2. Motor slippage may affect n_1 and n_2. Refer to technical data for details.
3. CNHM, CHHM, CNFM, CHFM, CNVM, and CVVM indicate types. Refer to page B-10 for details.
4. Lubrication method is different for each model. Refer to "Lubrication" section in page F-4~F-5 for details.
5. "6" at the end of "input capacity symbol" indicates models with 6P motor. Other models come with 4P motor.

Selection Tables Gearmotors

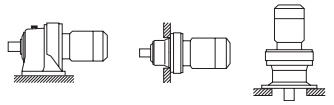

CHHM/CNHM CHFM/CNFM CVVM/CNVM

18.5 kW

n_1: Motor Speed

Hz	50Hz		60Hz	
P	4	6	4	6
n_1 r/min	1450	980	1750	1165

50Hz						60Hz						Nomenclature				Page of Dimension Sheet		
Output Speed n_2 [r/min]	Output Torque Tout [N·m]	[kgf·m]	Allowable Radial Load Pro [N]	[kgf]	SF	Output Speed n_2 [r/min]	Output Torque Tout [N·m]	[kgf·m]	Allowable Radial Load Pro [N]	[kgf]	SF	Input Capacity Symbol	- Frame Size	- Reduction Ratio		CNHM CHHM	CNFM CHFM	CNVM CVVM
50.0	3360	342	19000	1940	0.94	60.3	2780	284	18100	1840	1.02	25 -	6175	- 29		B-103	B-119	B-138
			26100	**2660**	**1.05**				**24700**	**2520**	**1.05**	**25 -**	**6180**	**- 29**		**B-104**	**B-120**	**B-139**
			26100	2660	1.30				24700	2520	1.30	25 -	6185	- 29		B-104	B-120	B-139
			37200	3790	1.66				35000	3570	1.66	25 -	6190	- 29		B-104	B-120	B-139
			37200	3790	2.04				35000	3570	2.04	25 -	6195	- 29		B-104	B-120	B-139
			68700	7000	2.47				65000	6630	2.47	25 -	6205	- 29		B-105	B-121	B-140
41.4	4050	413	**27800**	**2830**	**1.00**	50.0	3360	342	**26300**	**2680**	**1.02**	**25 -**	**6180**	**- 35**		**B-104**	**B-120**	**B-139**
			27800	2830	1.22				26300	2680	1.22	25 -	6185	- 35		B-104	B-120	B-139
			39200	3990	1.31				36900	3760	1.31	25 -	6190	- 35		B-104	B-120	B-139
			39200	3990	1.63				36900	3760	1.63	25 -	6195	- 35		B-104	B-120	B-139
33.7	4980	507	**29500**	**3010**	**1.01**	40.7	4120	420	**28000**	**2850**	**1.02**	**25 -**	**6185**	**- 43**		**B-104**	**B-120**	**B-139**
			42000	4290	1.13				39600	4040	1.13	25 -	6190	- 43		B-104	B-120	B-139
			42000	4290	1.46				39600	4040	1.63	25 -	6195	- 43		B-104	B-120	B-139
			77300	7880	1.72				73200	7460	1.72	25 -	6205	- 43		B-105	B-121	B-140
			78900	8050	2.44				74700	7620	2.44	25 -	6215	- 43		B-105	B-121	B-140
28.4	5900	602	30400	3100	0.82	34.3	4890	499	28900	2940	0.82	25 -	6185	- 51		B-104	B-120	B-139
			43700	4460	0.98				41300	4210	0.98	25 -	6190	- 51		B-104	B-120	B-139
			43700	**4460**	**1.13**				**41300**	**4210**	**1.13**	**25 -**	**6195**	**- 51**		**B-104**	**B-120**	**B-139**
24.6	6830	696	**45700**	**4660**	**1.02**	29.7	5660	577	**43100**	**4400**	**1.02**	**25 -**	**6195**	**- 59**		**B-104**	**B-120**	**B-139**
			83900	8550	1.22				79400	8100	1.22	25 -	6205	- 59		B-105	B-121	B-140
			85600	8730	1.83				81100	8270	2.04	25 -	6215	- 59		B-105	B-121	B-140
			90800	9250	2.12				86000	8760	2.44	25 -	6225	- 59		B-106	B-122	B-141
22.8	7360	751	**47400**	**4830**	**1.08**	27.1	6190	631	**45000**	**4580**	**1.24**	**256 -**	**6195**	**- 43**		**B-104**	**B-120**	**B-139**
			88400	9010	1.72				84100	8570	2.04	256 -	6215	- 43		B-105	B-121	B-140
			93700	9550	2.17				89100	9090	2.58	256 -	6225	- 43		B-106	B-122	B-141
20.4	8220	838	48100	4910	0.84	24.6	6810	694	45500	4640	0.84	25 -	6195	- 71		B-104	B-120	B-139
16.7	10100	1030	**95600**	**9740**	**1.06**	20.1	8340	851	**90600**	**9240**	**1.16**	**25 -**	**6215**	**- 87**		**B-105**	**B-121**	**B-140**
			101000	10300	1.44				96100	9790	1.44	25 -	6225	- 87		B-106	B-122	B-141
16.6	10100	1030	95700	9760	1.25	19.7	8500	866	91100	9290	1.49	256 -	6215	- 59		B-105	B-121	B-140
			102000	10300	1.57				96700	9850	1.80	256 -	6225	- 59		B-106	B-122	B-141
			127000	12900	1.87				120000	12300	2.04	256 -	6235	- 59		B-106	B-122	B-142
12.0	13300	1350	104000	10600	0.86	14.5	11000	1120	101000	10300	1.03	25 -	6215DB	- 121		B-113	B-130	B-149
			113000	**11500**	**1.01**				**107000**	**10900**	**1.22**	**25 -**	**6225DB**	**- 121**		**B-113**	**B-130**	**B-149**
			142000	14500	1.37				134000	13700	1.37	25 -	6235DA	- 121		B-114	B-131	B-150
			142000	14500	1.41				134000	13700	1.70	25 -	6235DB	- 121		B-114	B-131	B-150
			158000	16100	1.55				150000	15300	1.87	25 -	6245DB	- 121		B-114	B-131	B-150
			194000	19800	1.72				184000	18700	1.72	25 -	6255DA	- 121		B-115	B-132	B-151
			194000	19800	2.07				184000	18700	2.50	25 -	6255DB	- 121		B-115	B-132	B-151
			237000	24200	2.36				224000	22900	2.74	25 -	6265DA	- 121		B-115	B-132	B-151
11.3	14900	1520	**113000**	**11500**	**1.01**	13.4	12500	1280	**108000**	**11000**	**1.20**	**256 -**	**6225**	**- 87**		**B-106**	**B-122**	**B-141**
			142000	14400	1.15				135000	13700	1.30	256 -	6235	- 87		B-106	B-122	B-142
			159000	16200	1.52				151000	15400	1.74	256 -	6245	- 87		B-107	B-123	B-142
			195000	19900	2.08				186000	18900	2.32	256 -	6255	- 87		B-107	B-123	B-142
8.79	14500	1480	122000	12500	*1	10.6	14500	1480	115000	11800	*1	25 -	6225DB	- 165		B-113	B-130	B-149
	18100	1840	121000	12400	0.80		15000	1530	115000	11800	0.97	25 -	6225DB	- 165		B-113	B-130	B-149
			151000	15400	1.08				144000	14600	1.31	25 -	6235DA	- 165		B-114	B-131	B-150
			170000	17300	1.37				161000	16400	1.37	25 -	6245DA	- 165		B-114	B-131	B-150
			170000	17300	1.45				161000	16400	1.75	25 -	6245DB	- 165		B-114	B-131	B-150
			208000	21200	1.72				197000	20100	1.72	25 -	6255DA	- 165		B-115	B-132	B-151
			208000	21200	1.72				197000	20100	2.08	25 -	6255DB	- 165		B-115	B-132	B-151
			254000	25900	2.42				240000	24500	2.74	25 -	6265DA	- 165		B-115	B-132	B-151

6. "*2" indicate models manufactured with reducer and motor separately mounted on a common baseplate (horizontal shaft direction) or on an adaptor (vertical shaft direction). Consult us for details, including dimensions.
7. Allowable radial load (Pro) is the value at the midpoint of the slow speed shaft.
8. "*3" indicate models with reduction ratios equal to nominal ratio. Refer to Table A-3 "6000SK Series (Actual Reduction Ratio)" on page A-4 for actual reduction ratio. Indicated reduction ratio is the same as actual reduction ratio for other models.
9. Maintain torque load during operation within "Output torque" in the table for models with "*1" in the SF column. They cannot be operated with 100% motor rating.

Selection Tables Gearmotors

n_1: Motor Speed

18.5 kW	Hz		50Hz		60Hz	
	P		4	6	4	6
	n_1	r/min	1450	980	1750	1165

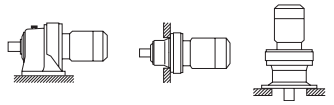

50Hz						60Hz						Nomenclature				Page of Dimension Sheet		
Output Speed n_2 [r/min]	Output Torque Tout [N·m]	[kgf·m]	Allowable Radial Load Pro [N]	[kgf]	SF	Output Speed n_2 [r/min]	Output Torque Tout [N·m]	[kgf·m]	Allowable Radial Load Pro [N]	[kgf]	SF	Input Capacity Symbol	-	Frame Size	- Reduction Ratio	CNHM CHHM	CNFM CHFM	CNVM CVVM
7.44	21400	2180	159000	16200	0.92	8.97	17700	1810	151000	15400	1.11	25	-	6235DA	- 195	B-114	B-131	B-150
			178000	**18100**	**1.23**				**169000**	**17200**	**1.29**	**25**	**-**	**6245DA**	**- 195**	**B-114**	**B-131**	**B-150**
			178000	18100	1.23				169000	17200	1.48	25	-	6245DB	- 195	B-114	B-131	B-150
			218000	22200	1.46				207000	21100	1.72	25	-	6255DA	- 195	B-115	B-132	B-151
			218000	22200	1.46				207000	21100	1.76	25	-	6255DB	- 195	B-115	B-132	B-151
			267000	27200	2.05				252000	25700	2.47	25	-	6265DA	- 195	B-115	B-132	B-151
6.28	18900	1930	171000	17400	*1	7.58	18900	1930	162000	16500	*1	25	-	6235DA	- 231	B-114	B-131	B-150
			189000	**19300**	**1.02**				**180000**	**18300**	**1.23**	**25**	**-**	**6245DA**	**- 231**	**B-114**	**B-131**	**B-150**
	25300	2580	232000	23600	1.22		21000	2140	219000	22400	1.48	25	-	6255DA	- 231	B-115	B-132	B-151
			276000	28100	1.82				269000	27400	2.19	25	-	6265DA	- 231	B-115	B-132	B-151
5.31	29900	3050	198000	20200	0.86	6.41	24800	2530	188000	19200	1.04	25	-	6245DA	- 273	B-114	B-131	B-150
			243000	**24800**	**1.04**				**230000**	**23500**	**1.25**	**25**	**-**	**6255DA**	**- 273**	**B-115**	**B-132**	**B-151**
			276000	28100	1.54				276000	28100	1.85	25	-	6265DA	- 273	B-115	B-132	B-151
4.55	25800	2630	208000	21200	*1	5.49	25800	2630	196000	20000	*1	25	-	6245DA	- 319	B-114	B-131	B-150
			255000	26000	0.93				242000	24600	1.12	25	-	6255DA	- 319	B-115	B-132	B-151
	35000	3570	276000	28100	1.31		29000	2950	276000	28100	1.59	25	-	6265DA	- 319	B-115	B-132	B-151
			248000	25300	1.95				248000	25300	2.35	25	-	6275DA	- 319	B-115	-	B-151
3.85	32500	3310	258000	26300	*1	4.64	32500	3310	254000	25900	*1	25	-	6255DA	- 377	B-115	B-132	B-151
	41300	4210	276000	28100	1.11		34300	3490	276000	28100	1.34	25	-	6265DA	- 377	B-115	B-132	B-151
			248000	25300	1.65				248000	25300	1.99	25	-	6275DA	- 377	B-115	-	B-151
3.07	51900	5290	276000	28100	0.89	3.70	43000	4380	276000	28100	1.07	25	-	6265DA	- 473	B-115	B-132	B-151
			248000	25300	1.31				248000	25300	1.59	25	-	6275DA	- 473	B-115	-	B-151
2.59	46000	4690	276000	28100	*1	3.13	46000	4690	276000	28100	*1	25	-	6265DA	- 559	B-115	B-132	B-151
	61300	6250	248000	25300	1.11		50800	5180	248000	25300	1.34	25	-	6275DA	- 559	B-115	-	B-151
2.23	71200	7250	248000	25300	0.96	2.70	59000	6010	248000	25300	1.16	25	-	6275DA	- 649	B-115	-	B-151
1.98	80200	8170	248000	25300	0.85	2.39	66400	6770	248000	25300	1.03	25	-	6275DA	- 731	B-115	-	B-151
1.72	68200	6950	248000	25300	*1	2.08	68200	6950	248000	25300	*1	25	-	6275DA	- 841	B-115	-	B-151

n_1: Motor Speed

22 kW	Hz		50Hz		60Hz	
	P		4	6	4	6
	n_1	r/min	1450	980	1750	1165

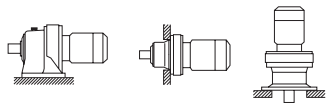

50Hz						60Hz						Nomenclature				Page of Dimension Sheet		
Output Speed n_2 [r/min]	Output Torque Tout [N·m]	[kgf·m]	Allowable Radial Load Pro [N]	[kgf]	SF	Output Speed n_2 [r/min]	Output Torque Tout [N·m]	[kgf·m]	Allowable Radial Load Pro [N]	[kgf]	SF	Input Capacity Symbol	-	Frame Size	- Reduction Ratio	CNHM CHHM	CNFM CHFM	CNVM CVVM
242	826	84.2	**10100**	**1020**	**1.10**	292	684	69.8	**9510**	**969**	**1.10**	**30**	**-**	**6165**	**- 6**	**B-103**	**B-119**	**B-138**
			11500	1170	1.25				10800	1100	1.25	30	-	6170	- 6	B-103	B-119	B-138
			11500	1170	1.37				10800	1100	1.37	30	-	6175	- 6	B-103	B-119	B-138
181	1100	112	**11200**	**1140**	**1.10**	219	912	93.0	**10600**	**1080**	**1.10**	**30**	**-**	**6165**	**- 8**	**B-103**	**B-119**	**B-138**
			12600	1290	1.25				11900	1220	1.25	30	-	6170	- 8	B-103	B-119	B-138
			12600	1290	1.37				11900	1220	1.37	30	-	6175	- 8	B-103	B-119	B-138

1. Combinations in **bold** are the recommended models for operations for 10 hours/day with uniform load (service factor is about 1.0 for motor rating at 50Hz).
2. Motor slippage may affect n_1 and n_2. Refer to technical data for details.
3. CNHM, CHHM, CNFM, CHFM, CNVM, and CVVM indicate types. Refer to page B-10 for details.
4. Lubrication method is different for each model. Refer to "Lubrication" section in page F-4~F-5 for details.
5. "6" at the end of "input capacity symbol" indicates models with 6P motor. Other models come with 4P motor.

Selection Tables Gearmotors

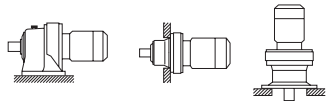

CHHM/CNHM CHFM/CNFM CVVM/CNVM

n1: Motor Speed

22 kW	Hz	50Hz		60Hz	
	P	4	6	4	6
	n1 r/min	1450	980	1750	1165

50Hz						60Hz						Nomenclature				Page of Dimension Sheet		
Output Speed n_2 [r/min]	Output Torque Tout [N·m]	[kgf·m]	Allowable Radial Load Pro [N]	[kgf]	SF	Output Speed n_2 [r/min]	Output Torque Tout [N·m]	[kgf·m]	Allowable Radial Load Pro [N]	[kgf]	SF	Input Capacity Symbol	- Frame Size	- Reduction Ratio		CNHM CHHM	CNFM CHFM	CNVM CVVM
			12600	**1280**	**1.10**				**11900**	**1220**	**1.10**	**30 -**	**6165**	**- 11**		**B-103**	**B-119**	**B-138**
			14500	1470	1.25				13700	1390	1.25	30 -	6170	- 11		B-103	B-119	B-138
			14500	1470	1.37				13700	1390	1.37	30 -	6175	- 11		B-103	B-119	B-138
132	1510	154	19500	1980	1.60	159	1250	128	18300	1870	1.60	30 -	6180	- 11		B-104	B-120	B-139
			19500	1980	1.77				18300	1870	1.77	30 -	6185	- 11		B-104	B-120	B-139
			27300	2780	1.86				25700	2620	1.86	30 -	6190	- 11		B-104	B-120	B-139
			27300	2780	2.19				25700	2620	2.19	30 -	6195	- 11		B-104	B-120	B-139
			52300	5330	2.71				49500	5040	2.71	30 -	6205	- 11		B-105	B-121	B-140
			13100	**1330**	**1.03**				**12400**	**1270**	**1.03**	**30 -**	**6165**	**- 13**		**B-103**	**B-119**	**B-138**
			15000	1530	1.24				14200	1450	1.24	30 -	6170	- 13		B-103	B-119	B-138
			15000	1530	1.37				14200	1450	1.37	30 -	6175	- 13		B-103	B-119	B-138
112	1790	182	20200	2060	1.60	135	1480	151	19100	1940	1.60	30 -	6180	- 13		B-104	B-120	B-139
			20200	2060	1.77				19100	1940	1.77	30 -	6185	- 13		B-104	B-120	B-139
			28400	2890	1.86				26700	2730	1.86	30 -	6190	- 13		B-104	B-120	B-139
			28400	2890	2.19				26700	2730	2.19	30 -	6195	- 13		B-104	B-120	B-139
			13800	**1400**	**1.02**				**13100**	**1340**	**1.03**	**30 -**	**6165**	**- 15**		**B-103**	**B-119**	**B-138**
			15600	1590	1.16				14800	1510	1.16	30 -	6170	- 15		B-103	B-119	B-138
			15600	1590	1.37				14800	1510	1.37	30 -	6175	- 15		B-104	B-120	B-139
96.7	2060	210	21300	2170	1.47	117	1710	174	20100	2050	1.47	30 -	6180	- 15		B-104	B-120	B-139
			21300	2170	1.77				20100	2050	1.77	30 -	6185	- 15		B-104	B-120	B-139
			29800	3040	1.86				28100	2860	1.86	30 -	6190	- 15		B-104	B-120	B-139
			29800	3040	2.19				28100	2860	2.19	30 -	6195	- 15		B-104	B-120	B-139
			56200	5730	2.71				53200	5420	2.71	30 -	6205	- 15		B-105	B-121	B-140
			14100	1440	0.86				13400	1370	0.86	30 -	6165	- 17		B-103	B-119	B-138
			16200	**1650**	**1.10**				**15400**	**1570**	**1.10**	**30 -**	**6175**	**- 17**		**B-103**	**B-119**	**B-138**
85.3	2340	239	22400	2280	1.39	103	1940	198	21200	2160	1.39	30 -	6180	- 17		B-104	B-120	B-139
			22400	2280	1.74				21200	2160	1.77	30 -	6185	- 17		B-104	B-120	B-139
			31400	3200	1.86				29600	3010	1.86	30 -	6190	- 17		B-104	B-120	B-139
			31400	3200	2.19				29600	3010	2.19	30 -	6195	- 17		B-104	B-120	B-139
			17500	**1780**	**1.07**				**16600**	**1690**	**1.10**	**30 -**	**6175**	**- 21**		**B-103**	**B-119**	**B-138**
			24000	2450	1.36				22700	2310	1.36	30 -	6180	- 21		B-104	B-120	B-139
			24000	2450	1.73				22700	2310	1.77	30 -	6185	- 21		B-104	B-120	B-139
69.0	2890	295	33700	3440	1.86	83.3	2400	244	31800	3240	1.86	30 -	6190	- 21		B-104	B-120	B-139
			33700	3440	2.19				31800	3240	2.19	30 -	6195	- 21		B-104	B-120	B-139
			62900	6410	2.69				59500	6070	2.69	30 -	6205	- 21		B-105	B-121	B-140
			17900	1830	0.89				17000	1740	0.89	30 -	6175	- 25		B-103	B-119	B-138
			24900	**2530**	**1.10**				**23500**	**2400**	**1.10**	**30 -**	**6180**	**- 25**		**B-104**	**B-120**	**B-139**
58.0	3440	351	24900	2530	1.37	70.0	2850	291	23500	2400	1.37	30 -	6185	- 25		B-104	B-120	B-139
			35300	3590	1.60				33200	3390	1.60	30 -	6190	- 25		B-104	B-120	B-139
			35300	3590	1.84				33200	3390	1.84	30 -	6195	- 25		B-104	B-120	B-139
			25900	**2640**	**1.10**				**24500**	**2500**	**1.10**	**30 -**	**6185**	**- 29**		**B-104**	**B-120**	**B-139**
			37000	3770	1.40				34900	3560	1.40	30 -	6190	- 29		B-104	B-120	B-139
50.0	3990	407	37000	3770	1.72	60.3	3310	337	34900	3560	1.72	30 -	6195	- 29		B-104	B-120	B-139
			68500	6990	2.08				64900	6610	2.08	30 -	6205	- 29		B-105	B-121	B-140
			70000	7130	2.66				66200	6750	2.66	30 -	6215	- 29		B-105	B-121	B-140
			27500	**2810**	**1.03**				**26000**	**2650**	**1.03**	**30 -**	**6185**	**- 35**		**B-104**	**B-120**	**B-139**
41.4	4820	491	39000	3970	1.10	50.0	3990	407	36700	3750	1.10	30 -	6190	- 35		B-104	B-120	B-139
			39000	3970	1.37				36700	3750	1.37	30 -	6195	- 35		B-104	B-120	B-139
			29100	2970	0.85				27600	2820	0.85	30 -	6185	- 43		B-104	B-120	B-139
			41800	4260	0.95				39400	4020	0.95	30 -	6190	- 43		B-104	B-120	B-139
			41800	4260	1.23				39400	4020	1.37	30 -	6195	- 43		B-104	B-120	B-139
33.7	5920	603	77100	7860	1.45	40.7	4900	500	73000	7440	1.45	30 -	6205	- 43		B-105	B-121	B-140
			78700	8020	2.05				74600	7600	2.05	30 -	6215	- 43		B-105	B-121	B-140
			83400	8510	2.57				79000	8050	2.57	30 -	6225	- 43		B-106	B-122	B-141
28.4	7020	716	43400	4420	0.95	34.3	5820	593	41000	4180	0.95	30 -	6195	- 51		B-104	B-120	B-139

6. "*2" indicate models manufactured with reducer and motor separately mounted on a common baseplate (horizontal shaft direction) or on an adaptor (vertical shaft direction). Consult us for details, including dimensions.
7. Allowable radial load (Pro) is the value at the midpoint of the slow speed shaft.
8. "*3" indicate models with reduction ratios equal to nominal ratio. Refer to Table A-3 "6000SK Series (Actual Reduction Ratio)" on page A-4 for actual reduction ratio. Indicated reduction ratio is the same as actual reduction ratio for other models.
9. Maintain torque load during operation within "Output torque" in the table for models with "*1" in the SF column. They cannot be operated with 100% motor rating.

Selection Tables Gearmotors

n_1: Motor Speed

22 kW	Hz		50Hz		60Hz	
	P		4	6	4	6
	n_1	r/min	1450	980	1750	1165

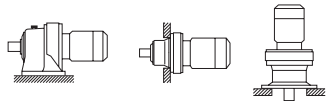

CHHM/CNHM CHFM/CNFM CVVM/CNVM

50Hz						60Hz						Nomenclature				Page of Dimension Sheet		
Output Speed n_2 [r/min]	Output Torque Tout [N·m]	[kgf·m]	Allowable Radial Load Pro [N]	[kgf]	SF	Output Speed n_2 [r/min]	Output Torque Tout [N·m]	[kgf·m]	Allowable Radial Load Pro [N]	[kgf]	SF	Input Capacity Symbol	-	Frame Size	- Reduction Ratio	CNHM CHHM	CNFM CHFM	CNVM CVVM
24.6	8120	828	45300	4620	0.85	29.7	6730	686	42800	4360	0.85	30	-	6195	- 59	B-104	B-120	B-139
			83600	**8520**	**1.03**				**79200**	**8070**	**1.03**	**30**	**-**	**6205**	**- 59**	**B-105**	**B-121**	**B-140**
			85300	8690	1.54				80800	8240	1.71	30	-	6215	- 59	B-105	B-121	B-140
			90500	9220	1.79				85700	8740	2.05	30	-	6225	- 59	B-106	B-122	B-141
22.8	8760	893	**84100**	**8570**	**1.06**	27.1	7370	751	**82100**	**8370**	**1.26**	**306**	**-**	**6205**	**- 43**	**B-105**	**B-121**	**B-140**
			88000	8970	1.45				83800	8540	1.72	306	-	6215	- 43	B-105	B-121	B-140
			93400	9520	1.83				88900	9060	2.17	306	-	6225	- 43	B-106	B-122	B-141
16.7	12000	1220	**101000**	**10300**	**1.21**	20.1	9920	1010	**95700**	**9760**	**1.21**	**30**	**-**	**6225**	**- 87**	**B-106**	**B-122**	**B-141**
16.6	12000	1220	**95200**	**9710**	**1.05**	19.7	10100	1030	**90700**	**9250**	**1.25**	**306**	**-**	**6215**	**- 59**	**B-105**	**B-121**	**B-140**
			101000	10300	1.32				96300	9810	1.51	306	-	6225	- 59	B-106	B-122	B-141
			141000	14400	2.15				134000	13700	2.55	306	-	6245	- 59	B-107	B-123	B-142
12.0	11400	1160	104000	10600	*1	14.5	11400	1160	101000	10300	*1	30	-	6215DB	- 121	B-113	B-130	B-149
	15800	1610	112000	11400	0.85		13100	1330	106000	10900	1.03	30	-	6225DB	- 121	B-113	B-130	B-149
			141000	**14400**	**1.15**				**134000**	**13700**	**1.15**	**30**	**-**	**6235DA**	**- 121**	**B-114**	**B-131**	**B-150**
			141000	14400	1.19				134000	13700	1.43	30	-	6235DB	- 121	B-114	B-131	B-150
			157000	16000	1.30				149000	15200	1.57	30	-	6245DB	- 121	B-114	B-131	B-150
			193000	19700	1.45				183000	18700	1.45	30	-	6255DA	- 121	B-115	B-132	B-151
			193000	19700	1.74				183000	18700	2.10	30	-	6255DB	- 121	B-115	B-132	B-151
			237000	24100	1.99				224000	22800	2.31	30	-	6265DA	- 121	B-115	B-132	B-151
11.3	17700	1810	158000	16100	1.28	13.4	14900	1520	150000	15300	1.46	306	-	6245	- 87	B-107	B-123	B-142
			195000	19800	1.75				185000	18900	1.95	306	-	6255	- 87	B-107	B-123	B-142
			237000	24200	2.43				226000	23000	2.43	306	-	6265	- 87	B-107	B-123	B-142
8.79	21500	2190	151000	15400	0.91	10.6	17800	1820	143000	14600	1.10	30	-	6235DA	- 165	B-114	B-131	B-150
			169000	**17200**	**1.15**				**160000**	**16300**	**1.15**	**30**	**-**	**6245DA**	**- 165**	**B-114**	**B-131**	**B-150**
			169000	17200	1.22				160000	16300	1.47	30	-	6245DB	- 165	B-114	B-131	B-150
			207000	21100	1.45				196000	20000	1.45	30	-	6255DA	- 165	B-115	B-132	B-151
			207000	21100	1.45				196000	20000	1.75	30	-	6255DB	- 165	B-115	B-132	B-151
			253000	25800	2.03				240000	24400	2.31	30	-	6265DA	- 165	B-115	B-132	B-151
7.44	19600	2000	159000	16200	*1	8.97	19600	2000	150000	15300	*1	30	-	6235DA	- 195	B-114	B-131	B-150
	25400	2590	**177000**	**18000**	**1.03**		21100	2150	**168000**	**17100**	**1.08**	**30**	**-**	**6245DA**	**- 195**	**B-114**	**B-131**	**B-150**
			177000	18000	1.03				168000	17100	1.25	30	-	6245DB	- 195	B-114	B-131	B-150
			218000	22200	1.23				206000	21000	1.45	30	-	6255DA	- 195	B-115	B-132	B-151
			218000	22200	1.23				206000	21000	1.48	30	-	6255DB	- 195	B-115	B-132	B-151
			266000	27100	1.72				252000	25700	2.08	30	-	6265DA	- 195	B-115	B-132	B-151
6.28	30100	3070	188000	19200	0.86	7.58	25000	2540	179000	18200	1.03	30	-	6245DA	- 231	B-114	B-131	B-150
			231000	**23500**	**1.03**				**219000**	**22300**	**1.24**	**30**	**-**	**6255DA**	**- 231**	**B-115**	**B-132**	**B-151**
			276000	28100	1.53				268000	27300	1.84	30	-	6265DA	- 231	B-115	B-132	B-151
5.31	25800	2630	199000	20300	*1	6.41	25800	2630	188000	19200	*1	30	-	6245DA	- 273	B-114	B-131	B-150
	35600	3630	242000	24700	0.87		29500	3010	229000	23400	1.05	30	-	6255DA	- 273	B-115	B-132	B-151
			276000	28100	1.29				276000	28100	1.56	30	-	6265DA	- 273	B-115	B-132	B-151
4.55	32500	3310	255000	26000	*1	5.49	32500	3310	241000	24600	*1	30	-	6255DA	- 319	B-115	B-132	B-151
	41600	4240	276000	28100	1.11		34500	3510	276000	28100	1.33	30	-	6265DA	- 319	B-115	B-132	B-151
			248000	25300	1.64				248000	25300	1.98	30	-	6275DA	- 319	B-115	-	B-151
3.85	49200	5010	276000	28100	0.94	4.64	40700	4150	276000	28100	1.13	30	-	6265DA	- 377	B-115	B-132	B-151
			248000	25300	1.39				248000	25300	1.67	30	-	6275DA	- 377	B-115	-	B-151
3.07	46000	4690	276000	28100	*1	3.70	46000	4690	276000	28100	*1	30	-	6265DA	- 473	B-115	B-132	B-151
	61700	6290	248000	25300	1.11		51100	5210	248000	25300	1.33	30	-	6275DA	- 473	B-115	-	B-151
2.59	72900	7430	248000	25300	0.94	3.13	60400	6160	248000	25300	1.13	30	-	6275DA	- 559	B-115	-	B-151
2.23	68200	6950	248000	25300	*1	2.70	68200	6950	248000	25300	*1	30	-	6275DA	- 649	B-115	-	B-151
	84600	8630	248000	25300	0.81		70100	7150	248000	25300	0.97	30	-	6275DA	- 649	B-115	-	B-151
1.98	68200	6950	248000	25300	*1	2.39	68200	6950	248000	25300	*1	30	-	6275DA	- 731	B-115	-	B-151

1. Combinations in **bold** are the recommended models for operations for 10 hours/day with uniform load (service factor is about 1.0 for motor rating at 50Hz).
2. Motor slippage may affect n_1 and n_2. Refer to technical data for details.
3. CNHM, CHHM, CNFM, CHFM, CNVM, and CVVM indicate types. Refer to page B-10 for details.
4. Lubrication method is different for each model. Refer to "Lubrication" section in page F-4~F-5 for details.
5. "6" at the end of "input capacity symbol" indicates models with 6P motor. Other models come with 4P motor.

Selection Tables Gearmotors

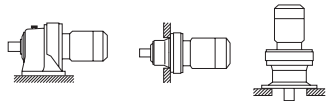

CHHM/CNHM CHFM/CNFM CVVM/CNVM

30 kW

n_1: Motor Speed

Hz	50Hz		60Hz	
P	4	6	4	6
n_1 r/min	1450	980	1750	1165

50Hz						60Hz						Nomenclature				Page of Dimension Sheet		
Output Speed n_2	Output Torque Tout		Allowable Radial Load Pro		SF	Output Speed n_2	Output Torque Tout		Allowable Radial Load Pro		SF	Input Capacity Symbol	- Frame Size	- Reduction Ratio		CNHM CHHM	CNFM CHFM	CNVM CVVM
[r/min]	[N·m]	[kgf·m]	[N]	[kgf]		[r/min]	[N·m]	[kgf·m]	[N]	[kgf]								
242	1130	115	**11300**	**1150**	**1.00**	292	933	95.1	**10700**	**1090**	**1.00**	**40**	**- 6175**	**- 6**		**B-103**	**B-119**	**B-138**
181	1500	153	**12400**	**1260**	**1.00**	219	1240	127	**11700**	**1200**	**1.00**	**40**	**- 6175**	**- 8**		**B-103**	**B-119**	**B-138**
			14100	**1440**	**1.00**				**13400**	**1370**	**1.00**	**40**	**- 6175**	**- 11**		**B-103**	**B-119**	**B-138**
			19200	1960	1.17				18200	1850	1.17	40	- 6180	- 11		B-104	B-120	B-139
			19200	1960	1.30				18200	1850	1.30	40	- 6185	- 11		B-104	B-120	B-139
132	2060	210	27100	2760	1.37	159	1710	174	25500	2600	1.37	40	- 6190	- 11		B-104	B-120	B-139
			27100	2760	1.60				25500	2600	1.60	40	- 6195	- 11		B-104	B-120	B-139
			52200	5320	1.99				49400	5030	1.99	40	- 6205	- 11		B-105	B-121	B-140
			52900	5390	2.51				50000	5100	2.51	40	- 6215	- 11		B-105	B-121	B-140
			14600	**1490**	**1.00**				**13900**	**1420**	**1.00**	**40**	**- 6175**	**- 13**		**B-103**	**B-119**	**B-138**
			19900	2030	1.17				18800	1920	1.17	40	- 6180	- 13		B-104	B-120	B-139
112	2440	249	19900	2030	1.30	135	2020	206	18800	1920	1.30	40	- 6185	- 13		B-104	B-120	B-139
			28200	2870	1.37				26500	2710	1.37	40	- 6190	- 13		B-104	B-120	B-139
			28200	2870	1.60				26500	2710	1.60	40	- 6195	- 13		B-104	B-120	B-139
			15100	**1540**	**1.00**				**14400**	**1470**	**1.00**	**40**	**- 6175**	**- 15**		**B-103**	**B-119**	**B-138**
			20900	2130	1.08				19800	2020	1.08	40	- 6180	- 15		B-104	B-120	B-139
			20900	2130	1.30				19800	2020	1.30	40	- 6185	- 15		B-104	B-120	B-139
96.7	2820	287	29500	3010	1.37	117	2330	238	27800	2840	1.37	40	- 6190	- 15		B-104	B-120	B-139
			29500	3010	1.60				27800	2840	1.60	40	- 6195	- 15		B-104	B-120	B-139
			56000	5710	1.99				53000	5410	1.99	40	- 6205	- 15		B-105	B-121	B-140
			56800	5790	2.51				53800	5480	2.51	40	- 6215	- 15		B-105	B-121	B-140
			15700	1600	0.80				14900	1520	0.80	40	- 6175	- 17		B-103	B-119	B-138
			22000	**2240**	**1.02**				**20800**	**2120**	**1.02**	**40**	**- 6180**	**- 17**		**B-104**	**B-120**	**B-139**
85.3	3190	325	22000	2240	1.27	103	2640	270	20800	2120	1.30	40	- 6185	- 17		B-104	B-120	B-139
			31100	3170	1.37				29300	2990	1.37	40	- 6190	- 17		B-104	B-120	B-139
			31100	3170	1.60				29300	2990	1.60	40	- 6195	- 17		B-104	B-120	B-139
			23600	**2410**	**1.00**				**22400**	**2280**	**1.00**	**40**	**- 6180**	**- 21**		**B-104**	**B-120**	**B-139**
			23600	2410	1.27				22400	2280	1.30	40	- 6185	- 21		B-104	B-120	B-139
			33500	3410	1.37				31500	3220	1.37	40	- 6190	- 21		B-104	B-120	B-139
69.0	3940	402	33500	3410	1.60	83.3	3270	333	31500	3220	1.60	40	- 6195	- 21		B-104	B-120	B-139
			62700	6390	1.97				59300	6050	1.97	40	- 6205	- 21		B-105	B-121	B-140
			64100	6530	2.51				60700	6180	2.51	40	- 6215	- 21		B-105	B-121	B-140
			24400	**2490**	**1.00**				**23100**	**2360**	**1.00**	**40**	**- 6185**	**- 25**		**B-104**	**B-120**	**B-139**
58.0	4690	478	34900	3560	1.17	70.0	3890	396	32900	3360	1.17	40	- 6190	- 25		B-104	B-120	B-139
			34900	3560	1.35				32900	3360	1.35	40	- 6195	- 25		B-104	B-120	B-139
			25300	2580	0.80				24000	2450	0.80	40	- 6185	- 29		B-104	B-120	B-139
			36600	**3730**	**1.02**				**34500**	**3520**	**1.02**	**40**	**- 6190**	**- 29**		**B-104**	**B-120**	**B-139**
50.0	5440	555	36600	3730	1.26	60.3	4510	460	34500	3520	1.26	40	- 6195	- 29		B-104	B-120	B-139
			68200	6950	1.52				64600	6590	1.52	40	- 6205	- 29		B-105	B-121	B-140
			69600	7090	1.95				65900	6720	1.95	40	- 6215	- 29		B-105	B-121	B-140
			73700	7520	2.51				69800	7120	2.51	40	- 6225	- 29		B-106	B-122	B-141
			37700	**3850**	**1.09**				**35800**	**3650**	**1.30**	**406**	**- 6190**	**- 21**		**B-104**	**B-120**	**B-139**
46.7	5830	595	37700	3850	1.36	55.5	4910	500	35800	3650	1.60	406	- 6195	- 21		B-104	B-120	B-139
			71700	7310	2.14				68200	6960	2.51	406	- 6215	- 21		B-105	B-121	B-140
41.4	6570	670	**38400**	**3920**	**1.00**	50.0	5440	555	**36300**	**3700**	**1.00**	**40**	**- 6195**	**- 35**		**B-104**	**B-120**	**B-139**
			76300	7770	1.15				72600	7400	1.32	406	- 6205	- 29		B-105	B-121	B-140
33.8	8050	821	77800	7930	1.57	40.2	6780	691	74100	7550	1.87	406	- 6215	- 29		B-105	B-121	B-140
			82500	8410	1.87				78500	8000	2.22	406	- 6225	- 29		B-106	B-122	B-141
			41100	4190	0.90				38900	3970	1.00	40	- 6195	- 43		B-104	B-120	B-139
33.7	8070	823	**76600**	**7810**	**1.06**	40.7	6690	682	**72600**	**7400**	**1.06**	**40**	**- 6205**	**- 43**		**B-105**	**B-121**	**B-140**
			78200	7970	1.51				74100	7560	1.51	40	- 6215	- 43		B-105	B-121	B-140
			83000	8460	1.88				78600	8010	1.88	40	- 6225	- 43		B-106	B-122	B-141
24.6	11100	1130	**84600**	**8620**	**1.13**	29.7	9180	935	**80300**	**8180**	**1.26**	**40**	**- 6215**	**- 59**		**B-105**	**B-121**	**B-140**
			89800	9150	1.31				85200	8680	1.51	40	- 6225	- 59		B-106	B-122	B-141
22.8	11900	1220	**87200**	**8890**	**1.06**	27.1	10000	1020	**83100**	**8480**	**1.26**	**406**	**- 6215**	**- 43**		**B-105**	**B-121**	**B-140**
			92600	9440	1.34				88300	9000	1.59	406	- 6225	- 43		B-106	B-122	B-141

6. "*2" indicate models manufactured with reducer and motor separately mounted on a common baseplate (horizontal shaft direction) or on an adaptor (vertical shaft direction). Consult us for details, including dimensions.
7. Allowable radial load (Pro) is the value at the midpoint of the slow speed shaft.
8. "*3" indicate models with reduction ratios equal to nominal ratio. Refer to Table A-3 "6000SK Series (Actual Reduction Ratio)" on page A-4 for actual reduction ratio. Indicated reduction ratio is the same as actual reduction ratio for other models.
9. Maintain torque load during operation within "Output torque" in the table for models with "*1" in the SF column. They cannot be operated with 100% motor rating.

Selection Tables Gearmotors

n_1: Motor Speed

30 kW	Hz		50Hz		60Hz	
	P		4	6	4	6
	n_1	r/min	1450	980	1750	1165

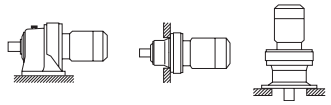

CHHM/CNHM CHFM/CNFM CVVM/CNVM

50Hz						60Hz						Nomenclature			Page of Dimension Sheet		
Output Speed n_2 [r/min]	Output Torque Tout [N·m]	[kgf·m]	Allowable Radial Load Pro [N]	[kgf]	SF	Output Speed n_2 [r/min]	Output Torque Tout [N·m]	[kgf·m]	Allowable Radial Load Pro [N]	[kgf]	SF	Input Capacity Symbol	- Frame Size	- Reduction Ratio	CNHM CHHM	CNFM CHFM	CNVM CVVM
16.6	16400	1670	129000	13200	2.16	19.7	13800	1410	123000	12500	2.51	406 -	6245	- 43	B-107	B-123	B-142
			125000	**12800**	**1.15**				**119000**	**12200**	**1.26**	**406 -**	**6235**	**- 59**	**B-106**	**B-122**	**B-141**
			140000	14300	1.57				134000	13600	1.87	406 -	6245	- 59	B-107	B-123	B-142
			173000	17600	1.89				164000	16800	2.16	406 -	6255	- 59	B-107	B-123	B-142
12.0	13500	1370	113000	11500	*1	14.5	13500	1370	106000	10800	*1	40 -	6225DB	- 121	B-113	B-130	B-149
	21500	2190	140000	14300	0.87		17800	1820	133000	13500	1.05	40 -	6235DB	- 121	B-114	B-131	B-150
			156000	15900	0.95				148000	15100	1.15	40 -	6245DB	- 121	B-114	B-131	B-150
			192000	**19600**	**1.06**				**182000**	**18600**	**1.06**	**40 -**	**6255DA**	**- 121**	**B-115**	**B-132**	**B-151**
			192000	19600	1.28				182000	18600	1.54	40 -	6255DB	- 121	B-115	B-132	B-151
			236000	24000	1.46				223000	22700	1.69	40 -	6265DA	- 121	B-115	B-132	B-151
11.3	24200	2460	193000	19700	1.28	13.4	20300	2070	184000	18800	1.43	406 -	6255	- 87	B-107	B-123	B-142
			236000	24100	1.78				225000	22900	1.78	406 -	6265	- 87	B-107	B-123	B-142
8.79	19600	2000	151000	15400	*1	10.6	19600	2000	143000	14500	*1	40 -	6235DB	- 165	B-114	B-131	B-150
	29300	2990	167000	17000	0.89		24300	2480	159000	16200	1.08	40 -	6245DB	- 165	B-114	B-131	B-150
			206000	**21000**	**1.06**				**195000**	**19900**	**1.06**	**40 -**	**6255DA**	**- 165**	**B-115**	**B-132**	**B-151**
			206000	21000	1.06				195000	19900	1.28	40 -	6255DB	- 165	B-115	B-132	B-151
			252000	25700	1.49				239000	24300	1.69	40 -	6265DA	- 165	B-115	B-132	B-151
7.44	26200	2680	177000	18000	*1	8.97	26200	2680	167000	17000	*1	40 -	6245DB	- 195	B-114	B-131	B-150
	34700	3530	216000	22000	0.90		28700	2930	205000	20900	1.06	40 -	6255DA	- 195	B-115	B-132	B-151
			216000	22000	0.90				205000	20900	1.08	40 -	6255DB	- 195	B-115	B-132	B-151
			265000	27000	1.26				251000	25600	1.52	40 -	6265DA	- 195	B-115	B-132	B-151
6.28	25800	2630	189000	19300	*1	7.58	25800	2630	179000	18200	*1	40 -	6245DB	- 231	B-114	B-131	B-150
	31000	3160	231000	23500	*1		31000	3160	218000	22200	*1	40 -	6255DA	- 231	B-115	B-132	B-151
	41100	4190	276000	28100	1.12		34000	3470	267000	27200	1.35	40 -	6265DA	- 231	B-115	B-132	B-151
5.31	31000	3160	243000	24700	*1	6.41	31000	3160	229000	23400	*1	40 -	6255DA	- 273	B-115	B-132	B-151
	48500	4950	276000	28100	0.95		40200	4100	276000	28100	1.14	40 -	6265DA	- 273	B-115	B-132	B-151
4.55	46000	4690	276000	28100	*1	5.49	46000	4690	276000	28100	*1	40 -	6265DA	- 319	B-115	B-132	B-151
	56700	5780	276000	28100	0.81		47000	4790	276000	28100	0.98	40 -	6265DA	- 319	B-115	B-132	B-151
			248000	25300	1.20				248000	25300	1.45	40 -	6275DA	- 319	B-115	-	B-151
3.85	46000	4690	276000	28100	*1	4.64	46000	4690	276000	28100	*1	40 -	6265DA	- 377	B-115	B-132	B-151
	67000	6830	**248000**	**25300**	**1.02**		55500	5660	**248000**	**25300**	**1.23**	**40 -**	**6275DA**	**- 377**	**B-115**	**-**	**B-151**
3.07	68200	6950	248000	25300	*1	3.70	68200	6950	248000	25300	*1	40 -	6275DA	- 473	B-115	-	B-151
	84100	8570	248000	25300	0.81		69700	7100	248000	25300	0.98	40 -	6275DA	- 473	B-115	-	B-151
2.59	68200	6950	248000	25300	*1	3.13	68200	6950	248000	25300	*1	40 -	6275DA	- 559	B-115	-	B-151

1. Combinations in **bold** are the recommended models for operations for 10 hours/day with uniform load (service factor is about 1.0 for motor rating at 50Hz).
2. Motor slippage may affect n_1 and n_2. Refer to technical data for details.
3. CNHM, CHHM, CNFM, CHFM, CNVM, and CVVM indicate types. Refer to page B-10 for details.
4. Lubrication method is different for each model. Refer to "Lubrication" section in page F-4~F-5 for details.
5. "6" at the end of "input capacity symbol" indicates models with 6P motor. Other models come with 4P motor.

Selection Tables Gearmotors

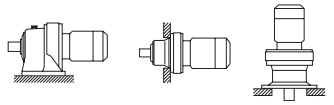

CHHM/CNHM CHFM/CNFM CVVM/CNVM

n1: Motor Speed

37 kW	Hz	50Hz		60Hz	
	P	4	6	4	6
	n1 r/min	1450	980	1750	1165

50Hz						60Hz						Nomenclature				Page of Dimension Sheet		
Output Speed n_2 [r/min]	Output Torque Tout [N·m]	[kgf·m]	Allowable Radial Load Pro [N]	[kgf]	SF	Output Speed n_2 [r/min]	Output Torque Tout [N·m]	[kgf·m]	Allowable Radial Load Pro [N]	[kgf]	SF	Input Capacity Symbol	- Frame Size	- Reduction Ratio		CNHM CHHM	CNFM CHFM	CNVM CVVM
			19000	**1940**	**1.05**				**18000**	**1830**	**1.05**	**50 -**	**6185**	**- 11**		**B-104**	**B-120**	**B-139**
			27000	2750	1.11				25400	2590	1.11	50 -	6190	- 11		B-104	B-120	B-139
132	2550	260	27000	2750	1.30	159	2110	215	25400	2590	1.30	50 -	6195	- 11		B-104	B-120	B-139
			52000	5310	1.61				49300	5020	1.61	50 -	6205	- 11		B-105	B-121	B-140
			52700	5380	2.04				49900	5090	2.04	50 -	6215	- 11		B-105	B-121	B-140
			56000	5700	2.69				53000	5400	2.69	50 -	6225	- 11		B-106	B-122	B-141
			19700	**2010**	**1.05**				**18600**	**1900**	**1.05**	**50 -**	**6185**	**- 13**		**B-104**	**B-120**	**B-139**
112	3010	307	28000	2850	1.11	135	2490	254	26400	2690	1.11	50 -	6190	- 13		B-104	B-120	B-139
			28000	2850	1.30				26400	2690	1.30	50 -	6195	- 13		B-104	B-120	B-139
			20600	**2100**	**1.05**				**19500**	**1990**	**1.05**	**50 -**	**6185**	**- 15**		**B-104**	**B-120**	**B-139**
			29300	2990	1.11				27700	2820	1.11	50 -	6190	- 15		B-104	B-120	B-139
96.7	3470	354	29300	2990	1.30	117	2880	293	27700	2820	1.30	50 -	6195	- 15		B-104	B-120	B-139
			55900	5700	1.61				52900	5390	1.61	50 -	6205	- 15		B-105	B-121	B-140
			56600	5770	2.04				53600	5470	2.04	50 -	6215	- 15		B-105	B-121	B-140
			60400	6160	2.69				57200	5830	2.69	50 -	6225	- 15		B-106	B-122	B-141
			21600	**2210**	**1.03**				**20500**	**2090**	**1.05**	**50 -**	**6185**	**- 17**		**B-104**	**B-120**	**B-139**
85.3	3940	401	30900	3150	1.11	103	3260	332	29100	2970	1.11	50 -	6190	- 17		B-104	B-120	B-139
			30900	3150	1.30				29100	2970	1.30	50 -	6195	- 17		B-104	B-120	B-139
			23300	**2370**	**1.03**				**22100**	**2250**	**1.05**	**50 -**	**6185**	**- 21**		**B-104**	**B-120**	**B-139**
			33200	3380	1.11				31300	3190	1.11	50 -	6190	- 21		B-104	B-120	B-139
69.0	4860	496	33200	3380	1.30	83.3	4030	411	31300	3190	1.30	50 -	6195	- 21		B-104	B-120	B-139
			62500	6370	1.60				59200	6030	1.60	50 -	6205	- 21		B-105	B-121	B-140
			63800	6510	2.04				60500	6170	2.04	50 -	6215	- 21		B-105	B-121	B-140
			67500	6880	2.55				63900	6510	2.55	50 -	6225	- 21		B-106	B-122	B-141
			32900	**3360**	**1.11**				**31300**	**3190**	**1.11**	**506 -**	**6190**	**- 15**		**B-104**	**B-120**	**B-139**
65.3	5140	524	32900	3360	1.30	77.7	4320	441	31300	3190	1.30	506 -	6195	- 15		B-104	B-120	B-139
			62600	6380	1.61				59500	6070	1.61	506 -	6205	- 15		B-105	B-121	B-140
			63400	6460	2.04				60300	6150	2.04	506 -	6215	- 15		B-105	B-121	B-140
			23900	2440	0.81				22700	2320	0.81	50 -	6185	- 25		B-104	B-120	B-139
58.0	5790	590	34600	3530	0.95	70.0	4800	489	32700	3330	0.95	50 -	6190	- 25		B-104	B-120	B-139
			34600	**3530**	**1.09**				**32700**	**3330**	**1.09**	**50 -**	**6195**	**- 25**		**B-104**	**B-120**	**B-139**
			36200	**3690**	**1.02**				**34200**	**3490**	**1.02**	**50 -**	**6195**	**- 29**		**B-104**	**B-120**	**B-139**
50.0	6710	684	67900	6920	1.24	60.3	5560	567	64400	6560	1.24	50 -	6205	- 29		B-105	B-121	B-140
			69300	7060	1.58				65700	6700	1.58	50 -	6215	- 29		B-105	B-121	B-140
			73400	7490	2.04				69600	7090	2.04	50 -	6225	- 29		B-106	B-122	B-141
			37300	**3800**	**1.11**				**35500**	**3610**	**1.30**	**506 -**	**6195**	**- 21**		**B-104**	**B-120**	**B-139**
46.7	7190	733	71400	7280	1.74	55.5	6050	617	68000	6930	2.04	506 -	6215	- 21		B-105	B-121	B-140
			75500	7690	2.06				71800	7320	2.45	506 -	6225	- 21		B-106	B-122	B-141
41.4	8100	826	38000	3870	0.81	50.0	6710	684	35900	3660	0.81	50 -	6195	- 35		B-104	B-120	B-139
			77300	7880	1.27				73700	7510	1.51	506 -	6215	- 29		B-105	B-121	B-140
33.8	9930	1010	82000	8360	1.51	40.2	8360	852	78100	7970	1.80	506 -	6225	- 29		B-106	B-122	B-141
			103000	10500	1.90				97900	9980	2.04	506 -	6235	- 29		B-106	B-122	B-141
33.7	9950	1010	**77700**	**7920**	**1.22**	40.7	8250	841	**73800**	**7520**	**1.22**	**50 -**	**6215**	**- 43**		**B-105**	**B-121**	**B-140**
			82500	8410	1.53				78300	7980	1.53	50 -	6225	- 43		B-106	B-122	B-141
24.6	13700	1390	**89200**	**9090**	**1.06**	29.7	11300	1150	**84700**	**8630**	**1.22**	**50 -**	**6225**	**- 59**		**B-106**	**B-122**	**B-141**
22.8	14700	1500	129000	13100	1.75	27.1	12400	1260	122000	12500	2.04	506 -	6245	- 43		B-107	B-123	B-142
			140000	14200	1.28				133000	13500	1.52	506 -	6245	- 59		B-107	B-123	B-142
16.6	20200	2060	172000	17600	1.54	19.7	17000	1730	164000	16700	1.75	506 -	6255	- 59		B-107	B-123	B-142
			211000	21500	2.28				201000	20500	2.55	506 -	6265	- 59		B-107	B-123	B-142

6. "*2" indicate models manufactured with reducer and motor separately mounted on a common baseplate (horizontal shaft direction) or on an adaptor (vertical shaft direction). Consult us for details, including dimensions.
7. Allowable radial load (Pro) is the value at the midpoint of the slow speed shaft.
8. "*3" indicate models with reduction ratios equal to nominal ratio. Refer to Table A-3 "6000SK Series (Actual Reduction Ratio)" on page A-4 for actual reduction ratio. Indicated reduction ratio is the same as actual reduction ratio for other models.
9. Maintain torque load during operation within "Output torque" in the table for models with "*1" in the SF column. They cannot be operated with 100% motor rating.

Selection Tables Gearmotors

37 kW

n_1: Motor Speed

Hz	50Hz		60Hz	
P	4	6	4	6
n_1 r/min	1450	980	1750	1165

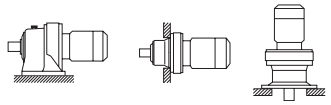

50Hz						60Hz						Nomenclature				Page of Dimension Sheet		
Output Speed n_2 [r/min]	Output Torque Tout [N·m]	[kgf·m]	Allowable Radial Load Pro [N]	[kgf]	SF	Output Speed n_2 [r/min]	Output Torque Tout [N·m]	[kgf·m]	Allowable Radial Load Pro [N]	[kgf]	SF	Input Capacity Symbol	- Frame Size	- Reduction Ratio		CNHM CHHM	CNFM CHFM	CNVM CVVM
12.0	18700	1910	141000	14300	*1	14.5	18700	1910	133000	13500	*1	50 -	6235DB	- 121		B-114	B-131	B-150
	20500	2090	156000	15900	*1		20500	2090	148000	15000	*1	50 -	6245DB	- 121		B-114	B-131	B-150
	26500	2710	**191000**	**19500**	**1.04**		22000	2240	**181000**	**18500**	**1.25**	**50 -**	**6255DB**	**- 121**		**B-115**	**B-132**	**B-151**
			235000	23900	1.18				222000	22700	1.37	50 -	6265DA	- 121		B-115	B-132	B-151
11.3	29800	3040	**192000**	**19600**	**1.04**	13.4	25100	2560	**183000**	**18700**	**1.16**	**506 -**	**6255**	**- 87**		**B-107**	**B-123**	**B-142**
			236000	24000	1.44				224000	22900	1.44	506 -	6265	- 87		B-107	B-123	B-142
8.79	26200	2680	168000	17100	*1	10.6	26200	2680	158000	16100	*1	50 -	6245DB	- 165		B-114	B-131	B-150
	36200	3690	205000	20900	0.86		30000	3060	194000	19800	1.04	50 -	6255DB	- 165		B-115	B-132	B-151
			251000	25600	1.21				238000	24300	1.37	50 -	6265DA	- 165		B-115	B-132	B-151
7.44	31200	3180	216000	22100	*1	8.97	31200	3180	204000	20800	*1	50 -	6255DB	- 195		B-115	B-132	B-151
	42800	4360	**263000**	**26800**	**1.02**		**35400**	**3610**	**250000**	**25400**	**1.23**	**50 -**	**6265DA**	**- 195**		**B-115**	**B-132**	**B-151**
6.28	50700	5160	276000	28100	0.91	7.58	42000	4280	266000	27100	1.10	50 -	6265DA	- 231		B-115	B-132	B-151
5.31	46000	4690	276000	28100	*1	6.41	46000	4690	276000	28100	*1	50 -	6265DA	- 273		B-115	B-132	B-151
4.55	70000	7130	248000	25300	0.97	5.49	58000	5910	248000	25300	1.18	50 -	6275DA	- 319		B-115	-	B-151
3.85	68200	6950	248000	25300	*1	4.64	68200	6950	248000	25300	*1	50 -	6275DA	- 377		B-115	-	B-151
	82700	8430	248000	25300	0.82		68500	6980	248000	25300	1.00	50 -	6275DA	- 377		B-115	-	B-151

45 kW

n_1: Motor Speed

Hz	50Hz		60Hz	
P	4	6	4	6
n_1 r/min	1450	980	1750	1165

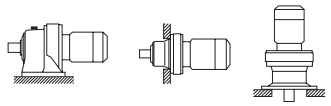

50Hz						60Hz						Nomenclature				Page of Dimension Sheet		
Output Speed n_2 [r/min]	Output Torque Tout [N·m]	[kgf·m]	Allowable Radial Load Pro [N]	[kgf]	SF	Output Speed n_2 [r/min]	Output Torque Tout [N·m]	[kgf·m]	Allowable Radial Load Pro [N]	[kgf]	SF	Input Capacity Symbol	- Frame Size	- Reduction Ratio		CNHM CHHM	CNFM CHFM	CNVM CVVM
132	3100	316	**26800**	**2730**	**1.07**	159	2570	262	**25300**	**2570**	**1.07**	**60 -**	**6195**	**- 11**		**B-104**	**B-120**	**B-139**
			51900	5290	1.33				49200	5010	1.33	60 -	6205	- 11		B-105	B-121	B-140
			52600	5360	1.67				49800	5080	1.67	60 -	6215	- 11		B-105	B-121	B-140
			55800	5690	2.21				52800	5390	2.21	60 -	6225	- 11		B-106	B-122	B-141
112	3660	373	**27700**	**2830**	**1.07**	135	3030	309	**26200**	**2670**	**1.07**	**60 -**	**6195**	**- 13**		**B-104**	**B-120**	**B-139**
96.7	4220	431	**29000**	**2960**	**1.07**	117	3500	357	**27400**	**2800**	**1.07**	**60 -**	**6195**	**- 15**		**B-104**	**B-120**	**B-139**
			55700	5680	1.33				52800	5380	1.33	60 -	6205	- 15		B-105	B-121	B-140
			56500	5750	1.67				53500	5450	1.67	60 -	6215	- 15		B-105	B-121	B-140
			60200	6140	2.21				57000	5820	2.21	60 -	6225	- 15		B-106	B-122	B-141
85.3	4790	488	21200	2160	0.85	103	3970	404	20200	2060	0.87	60 -	6185	- 17		B-104	B-120	B-139
			30600	**3120**	**1.07**				**28900**	**2950**	**1.07**	**60 -**	**6195**	**- 17**		**B-104**	**B-120**	**B-139**
69.0	5910	603	22800	2330	0.85	83.3	4900	499	21700	2210	0.87	60 -	6185	- 21		B-104	B-120	B-139
			32900	3350	0.91				31100	3170	0.91	60 -	6190	- 21		B-104	B-120	B-139
			32900	**3350**	**1.07**				**31100**	**3170**	**1.07**	**60 -**	**6195**	**- 21**		**B-104**	**B-120**	**B-139**
			62200	6340	1.32				59000	6010	1.32	60 -	6205	- 21		B-105	B-121	B-140
			63600	6480	1.67				60300	6140	1.67	60 -	6215	- 21		B-105	B-121	B-140
			67200	6850	2.09				63700	6490	2.09	60 -	6225	- 21		B-106	B-122	B-141
65.3	6250	637	62300	6350	1.33	77.7	5260	536	59300	6050	1.33	606 -	6205	- 15		B-105	B-121	B-140
			63100	6430	1.67				60100	6130	1.67	606 -	6215	- 15		B-105	B-121	B-140
			67400	6870	2.21				64200	6540	2.21	606 -	6225	- 15		B-106	B-122	B-141
58.0	7040	718	34200	3490	0.90	70.0	5830	595	32400	3300	0.90	60 -	6195	- 25		B-104	B-120	B-139
50.0	8170	832	35700	3640	0.84	60.3	6770	690	33900	3450	0.84	60 -	6195	- 29		B-104	B-120	B-139
			67600	**6890**	**1.02**				**64100**	**6530**	**1.02**	**60 -**	**6205**	**- 29**		**B-105**	**B-121**	**B-140**
			68900	7030	1.30				65400	6660	1.30	60 -	6215	- 29		B-105	B-121	B-140
			73100	7450	1.67				69300	7070	1.67	60 -	6225	- 29		B-106	B-122	B-141

1. Combinations in **bold** are the recommended models for operations for 10 hours/day with uniform load (service factor is about 1.0 for motor rating at 50Hz).
2. Motor slippage may affect n_1 and n_2. Refer to technical data for details.
3. CNHM, CHHM, CNFM, CHFM, CNVM, and CVVM indicate types. Refer to page B-10 for details.
4. Lubrication method is different for each model. Refer to "Lubrication" section in page F-4~F-5 for details.
5. "6" at the end of "input capacity symbol" indicates models with 6P motor. Other models come with 4P motor.

Selection Tables Gearmotors

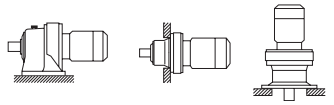

CHHM/CNHM CHFM/CNFM CVVM/CNVM

n_1: Motor Speed

45 kW	Hz	50Hz		60Hz	
	P	4	6	4	6
	n_1 r/min	1450	980	1750	1165

50Hz						60Hz						Nomenclature				Page of Dimension Sheet		
Output Speed n_2	Output Torque Tout		Allowable Radial Load Pro		SF	Output Speed n_2	Output Torque Tout		Allowable Radial Load Pro		SF	Input Capacity Symbol	- Frame Size	- Reduction Ratio		CNHM CHHM	CNFM CHFM	CNVM CVVM
[r/min]	[N·m]	[kgf·m]	[N]	[kgf]		[r/min]	[N·m]	[kgf·m]	[N]	[kgf]								
			69500	**7080**	**1.06**				**66200**	**6750**	**1.22**	**606 -**	**6205**	**- 21**		**B-105**	**B-121**	**B-140**
46.7	8750	892	71000	7240	1.43	55.5	7360	750	67700	6900	1.67	606 -	6215	- 21		B-105	B-121	B-140
			75100	7660	1.69				71500	7290	2.01	606 -	6225	- 21		B-106	B-122	B-141
			94100	9590	2.16				89500	9130	2.17	606 -	6235	- 21		B-106	B-122	B-141
			76800	**7830**	**1.05**				**73200**	**7460**	**1.24**	**606 -**	**6215**	**- 29**		**B-105**	**B-121**	**B-140**
33.8	12100	1230	102000	10400	1.56	40.2	10200	1040	97500	9940	1.67	606 -	6235	- 29		B-106	B-122	B-141
			114000	11700	2.09				109000	11100	2.09	606 -	6245	- 29		B-107	B-123	B-142
33.7	12100	1230	**77200**	**7870**	**1.00**	40.7	10000	1020	**73300**	**7470**	**1.00**	**60 -**	**6215**	**- 43**		**B-105**	**B-121**	**B-140**
			82000	8360	1.26				77800	7940	1.26	60 -	6225	- 43		B-106	B-122	B-141
			114000	**11600**	**1.06**				**108000**	**11100**	**1.21**	**606 -**	**6235**	**- 43**		**B-106**	**B-122**	**B-141**
22.8	17900	1830	128000	13100	1.44	27.1	15100	1540	122000	12400	1.67	606 -	6245	- 43		B-107	B-123	B-142
			157000	16000	1.73				150000	15300	1.98	606 -	6255	- 43		B-107	B-123	B-142
			193000	19700	2.51				184000	18700	2.51	606 -	6265	- 43		B-107	B-123	B-142
16.6	24600	2510	**139000**	**14100**	**1.05**	19.7	20700	2110	**132000**	**13500**	**1.25**	**606 -**	**6245**	**- 59**		**B-107**	**B-123**	**B-142**
			210000	21400	1.87				200000	20400	2.09	606 -	6265	- 59		B-107	B-123	B-142
12.0	32300	3290	190000	19400	0.85	14.5	26700	2730	180000	18400	1.03	60 -	6255DB	- 121		B-115	B-132	B-151
			234000	23800	0.97				222000	22600	1.13	60 -	6265DA	- 121		B-115	B-132	B-151
11.3	36200	3690	**235000**	**23900**	**1.19**	13.4	30500	3110	**223000**	**22800**	**1.19**	**606 -**	**6265**	**- 87**		**B-107**	**B-123**	**B-142**
8.79	44000	4490	250000	25500	0.98	10.6	36500	3720	237000	24200	1.13	60 -	6265DA	- 165		B-115	B-132	B-151
7.44	52000	5300	262000	26700	0.84	8.97	43100	4390	248000	25300	1.01	60 -	6265DA	- 195		B-115	B-132	B-151
6.28	46000	4690	276000	28100	*1	7.58	46000	4690	265000	27000	*1	60 -	6265DA	- 231		B-115	B-132	B-151
4.55	68200	6950	248000	25300	*1	5.49	68200	6950	248000	25300	*1	60 -	6275DA	- 319		B-115	-	B-151
	85100	8670	248000	25300	0.80		70500	7190	248000	25300	0.97	60 -	6275DA	- 319		B-115	-	B-151

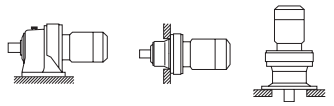

CHHM/CNHM CHFM/CNFM CVVM/CNVM

n_1: Motor Speed

55 kW	Hz	50Hz		60Hz	
	P	4	6	4	6
	n_1 r/min	1450	980	1750	1165

50Hz						60Hz						Nomenclature				Page of Dimension Sheet		
Output Speed n_2	Output Torque Tout		Allowable Radial Load Pro		SF	Output Speed n_2	Output Torque Tout		Allowable Radial Load Pro		SF	Input Capacity Symbol	- Frame Size	- Reduction Ratio		CNHM CHHM	CNFM CHFM	CNVM CVVM
[r/min]	[N·m]	[kgf·m]	[N]	[kgf]		[r/min]	[N·m]	[kgf·m]	[N]	[kgf]								
			51700	**5270**	**1.09**				**49000**	**5000**	**1.09**	**75 -**	**6205**	**- 11**		**B-105**	**B-121**	**B-140**
132	3790	386	52400	5340	1.37	159	3140	320	49700	5060	1.37	75 -	6215	- 11		B-105	B-121	B-140
			55600	5670	1.81				52700	5370	1.81	75 -	6225	- 11		B-106	B-122	B-141
			55500	**5660**	**1.09**				**52600**	**5360**	**1.09**	**75 -**	**6205**	**- 15**		**B-105**	**B-121**	**B-140**
96.7	5160	526	56200	5730	1.37	117	4280	436	53300	5430	1.37	75 -	6215	- 15		B-105	B-121	B-140
			60000	6120	1.81				56900	5800	1.81	75 -	6225	- 15		B-106	B-122	B-141
			57800	**5900**	**1.09**				**55100**	**5610**	**1.09**	**756 -**	**6205**	**- 11**	***2**	**-**	**-**	**-**
89.1	5600	571	58600	5970	1.37	106	4710	480	55800	5690	1.37	756 -	6215	- 11	*2	-	-	-
			62200	6340	1.81				59300	6040	1.81	756 -	6225	- 11	*2	-	-	-
			61900	**6310**	**1.08**				**58700**	**5980**	**1.08**	**75 -**	**6205**	**- 21**		**B-105**	**B-121**	**B-140**
69.0	7230	737	63300	6450	1.37	83.3	5990	610	60000	6120	1.37	75 -	6215	- 21		B-105	B-121	B-140
			66900	6820	1.71				63400	6470	1.71	75 -	6225	- 21		B-106	B-122	B-141
			62000	**6320**	**1.09**				**59000**	**6020**	**1.09**	**756 -**	**6205**	**- 15**	***2**	**-**	**-**	**-**
65.3	7640	779	62800	6400	1.37	77.7	6420	655	59800	6100	1.37	756 -	6215	- 15	*2	-	-	-
			67100	6840	1.81				63900	6510	1.81	756 -	6225	- 15	*2	-	-	-

6. "*2" indicate models manufactured with reducer and motor separately mounted on a common baseplate (horizontal shaft direction) or on an adaptor (vertical shaft direction). Consult us for details, including dimensions.
7. Allowable radial load (Pro) is the value at the midpoint of the slow speed shaft.
8. "*3" indicate models with reduction ratios equal to nominal ratio. Refer to Table A-3 "6000SK Series (Actual Reduction Ratio)" on page A-4 for actual reduction ratio. Indicated reduction ratio is the same as actual reduction ratio for other models.
9. Maintain torque load during operation within "Output torque" in the table for models with "*1" in the SF column. They cannot be operated with 100% motor rating.

Selection Tables Gearmotors

55 kW

n_1: Motor Speed

Hz		50Hz		60Hz	
P		4	6	4	6
n_1	r/min	1450	980	1750	1165

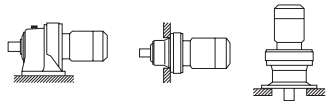

50Hz						60Hz						Nomenclature				Page of Dimension Sheet		
Output Speed n_2 [r/min]	Output Torque Tout [N·m]	[kgf·m]	Allowable Radial Load Pro [N]	[kgf]	SF	Output Speed n_2 [r/min]	Output Torque Tout [N·m]	[kgf·m]	Allowable Radial Load Pro [N]	[kgf]	SF	Input Capacity Symbol	- Frame Size	- Reduction Ratio		CNHM CHHM	CNFM CHFM	CNVM CVVM
50.0	9980	1020	**68500**	**6980**	**1.06**	60.3	8270	843	**65000**	**6630**	**1.06**	**75 -**	**6215**	**- 29**		**B-105**	**B-121**	**B-140**
			72700	7410	1.37				69000	7030	1.37	75 -	6225	- 29		B-106	B-122	B-141
46.7	10700	1090	70500	7190	1.17	55.5	8990	917	67200	6860	1.37	756 -	6215	- 21	*2	-	-	-
			74700	7610	1.38				71200	7250	1.65	756 -	6225	- 21	*2	-	-	-
			93700	9550	1.77				89200	9090	1.77	756 -	6235	- 21		B-106	B-122	B-141
33.8	14800	1510	**80900**	**8240**	**1.02**	40.2	12400	1270	**77200**	**7870**	**1.21**	**756 -**	**6225**	**- 29**	***2**	**-**	**-**	**-**
			114000	11600	1.71				108000	11100	1.71	756 -	6245	- 29		B-107	B-123	B-142
			141000	14300	2.15				134000	13600	2.15	756 -	6255	- 29		B-107	B-123	B-142
33.7	14800	1510	**81400**	**8290**	**1.03**	40.7	12300	1250	**77300**	**7880**	**1.03**	**75 -**	**6225**	**- 43**		**B-106**	**B-122**	**B-141**
22.8	21900	2230	127000	13000	1.18	27.1	18400	1880	121000	12400	1.37	756 -	6245	- 43		B-107	B-123	B-142
			157000	16000	1.42				149000	15200	1.62	756 -	6255	- 43		B-107	B-123	B-142
			192000	19600	2.05				183000	18700	2.05	756 -	6265	- 43		B-107	B-123	B-142
16.6	30000	3060	**170000**	**17400**	**1.03**	19.7	25300	2580	**162000**	**16500**	**1.18**	**756 -**	**6255**	**- 59**		**B-107**	**B-123**	**B-142**
			209000	21400	1.53				199000	20300	1.71	756 -	6265	- 59		B-107	B-123	B-142
			248000	25300	2.27				248000	25300	2.40	756 -	6275	- 59	*2	-	-	-

75 kW

n_1: Motor Speed

Hz		50Hz		60Hz	
P		4	6	4	6
n_1	r/min	1450	980	1750	1165

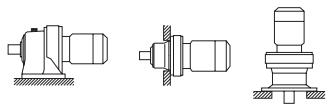

50Hz						60Hz						Nomenclature				Page of Dimension Sheet		
Output Speed n_2 [r/min]	Output Torque Tout [N·m]	[kgf·m]	Allowable Radial Load Pro [N]	[kgf]	SF	Output Speed n_2 [r/min]	Output Torque Tout [N·m]	[kgf·m]	Allowable Radial Load Pro [N]	[kgf]	SF	Input Capacity Symbol	- Frame Size	- Reduction Ratio		CNHM CHHM	CNFM CHFM	CNVM CVVM
132	5160	526	55300	5640	1.33	159	4280	436	52400	5340	1.33	100 -	6225	- 11	*2	-	-	-
96.7	7040	718	59600	6070	1.33	117	5830	595	56500	5760	1.33	100 -	6225	- 15	*2	-	-	-
89.1	7640	779	77600	7910	1.51	106	6420	655	73900	7530	1.51	1006-	6235	- 11	*2	-	-	-
			86500	8810	1.76				82300	8390	1.76	1006-	6245	- 11	*2	-	-	-
69.0	9850	1000	**66300**	**6760**	**1.26**	83.3	8170	832	**62900**	**6420**	**1.26**	**100 -**	**6225**	**- 21**	***2**	**-**	**-**	**-**
65.3	10400	1060	82900	8450	1.51	77.7	8760	893	78900	8050	1.51	1006-	6235	- 15	*2	-	-	-
			92800	9460	1.76				88300	9000	1.76	1006-	6245	- 15	*2	-	-	-
50.0	13600	1390	**71800**	**7320**	**1.00**	60.3	11300	1150	**68200**	**6960**	**1.00**	**100 -**	**6225**	**- 29**	***2**	**-**	**-**	**-**
46.7	14600	1490	**92800**	**9460**	**1.30**	55.5	12300	1250	**88500**	**9020**	**1.30**	**1006-**	**6235**	**- 21**	***2**	**-**	**-**	**-**
			104000	10600	1.60				98700	10100	1.60	1006-	6245	- 21	*2	-	-	-
			127000	12900	2.01				121000	12300	2.01	1006-	6255	- 21	*2	-	-	-
33.8	20100	2050	**113000**	**11500**	**1.26**	40.2	16900	1730	**108000**	**11000**	**1.26**	**1006-**	**6245**	**- 29**	***2**	**-**	**-**	**-**
			139000	14200	1.57				133000	13500	1.57	1006-	6255	- 29	*2	-	-	-
			172000	17500	2.12				163000	16600	2.12	1006-	6265	- 29	*2	-	-	-
22.8	29900	3040	**155000**	**15800**	**1.04**	27.1	25100	2560	**148000**	**15100**	**1.19**	**1006-**	**6255**	**- 43**	***2**	**-**	**-**	**-**
			191000	19500	1.51				182000	18600	1.51	1006-	6265	- 43	*2	-	-	-
			248000	25300	2.01				248000	25300	2.01	1006-	6275	- 43	*2	-	-	-
16.6	41000	4180	**208000**	**21200**	**1.12**	19.7	34500	3510	**198000**	**20200**	**1.26**	**1006-**	**6265**	**- 59**	***2**	**-**	**-**	**-**
			248000	25300	1.67				248000	25300	1.76	1006-	6275	- 59	*2	-	-	-

1. Combinations in **bold** are the recommended models for operations for 10 hours/day with uniform load (service factor is about 1.0 for motor rating at 50Hz).
2. Motor slippage may affect n_1 and n_2. Refer to technical data for details.
3. CNHM, CHHM, CNFM, CHFM, CNVM, and CVVM indicate types. Refer to page B-10 for details.
4. Lubrication method is different for each model. Refer to "Lubrication" section in page F-4~F-5 for details.
5. "6" at the end of "input capacity symbol" indicates models with 6P motor. Other models come with 4P motor.

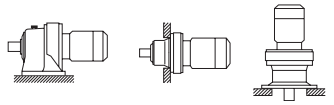

CHHM/CNHM CHFM/CNFM CVVM/CNVM

n_1: Motor Speed

90 kW	Hz	50Hz		60Hz	
	P	4	6	4	6
	n_1 r/min	1450	980	1750	1165

50Hz						60Hz						Nomenclature					Page of Dimension Sheet		
Output Speed n_2 [r/min]	Output Torque Tout [N·m]	[kgf·m]	Allowable Radial Load Pro [N]	[kgf]	SF	Output Speed n_2 [r/min]	Output Torque Tout [N·m]	[kgf·m]	Allowable Radial Load Pro [N]	[kgf]	SF	Input Capacity Symbol	-	Frame Size	-	Reduction Ratio	CNHM CHHM	CNFM CHFM	CNVM CVVM
89.1	9170	934	**77300**	**7880**	**1.26**	106	7710	786	**73600**	**7500**	**1.26**	**1256-**		**6235**	**-**	**11 *2**	**-**	**-**	**-**
			86100	8780	1.47				82000	8360	1.47	1256-		6245	-	11 *2	-	-	-
			106000	10800	1.68				101000	10300	1.68	1256-		6255	-	11 *2	-	-	-
			130000	13200	1.94				123000	12600	1.94	1256-		6265	-	11 *2	-	-	-
65.3	12500	1270	**82400**	**8400**	**1.26**	77.7	10500	1070	**78500**	**8010**	**1.26**	**1256-**		**6235**	**-**	**15 *2**	**-**	**-**	**-**
			92300	9410	1.47				87900	8960	1.47	1256-		6245	-	15 *2	-	-	-
			113000	11600	1.68				108000	11000	1.68	1256-		6255	-	15 *2	-	-	-
			139000	14100	1.94				132000	13400	1.94	1256-		6265	-	15 *2	-	-	-
46.7	17500	1780	**92200**	**9400**	**1.08**	55.5	14700	1500	**88000**	**8970**	**1.08**	**1256-**		**6235**	**-**	**21 *2**	**-**	**-**	**-**
			103000	10500	1.33				98200	10000	1.33	1256-		6245	-	21 *2	-	-	-
			126000	12900	1.68				120000	12300	1.68	1256-		6255	-	21 *2	-	-	-
			155000	15800	1.91				147000	15000	1.91	1256-		6265	-	21 *2	-	-	-
33.8	24200	2460	**112000**	**11400**	**1.05**	40.2	20300	2070	**107000**	**10900**	**1.05**	**1256-**		**6245**	**-**	**29 *2**	**-**	**-**	**-**
			139000	14100	1.31				132000	13500	1.31	1256-		6255	-	29 *2	-	-	-
			171000	17400	1.77				163000	16600	1.77	1256-		6265	-	29 *2	-	-	-
22.8	35800	3650	**190000**	**19400**	**1.26**	27.1	30100	3070	**181000**	**18500**	**1.26**	**1256-**		**6265**	**-**	**43 *2**	**-**	**-**	**-**
			248000	25300	1.68				248000	25300	1.68	1256-		6275	-	43 *2	-	-	-
16.6	49200	5010	248000	25300	1.39	19.7	41400	4220	248000	25300	1.47	1256-		6275	-	59 *2	-	-	-

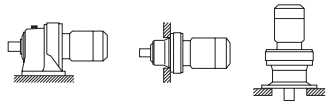

CHHM/CNHM CHFM/CNFM CVVM/CNVM

n_1: Motor Speed

110 kW	Hz	50Hz		60Hz	
	P	4	6	4	6
	n_1 r/min	1450	980	1750	1165

50Hz						60Hz						Nomenclature					Page of Dimension Sheet		
Output Speed n_2 [r/min]	Output Torque Tout [N·m]	[kgf·m]	Allowable Radial Load Pro [N]	[kgf]	SF	Output Speed n_2 [r/min]	Output Torque Tout [N·m]	[kgf·m]	Allowable Radial Load Pro [N]	[kgf]	SF	Input Capacity Symbol	-	Frame Size	-	Reduction Ratio	CNHM CHHM	CNFM CHFM	CNVM CVVM
89.1	11200	1140	**85700**	**8730**	**1.20**	106	9420	961	**81600**	**8320**	**1.20**	**1506-**		**6245**	**-**	**11 *2**	**-**	**-**	**-**
			105000	10700	1.37				100000	10200	1.37	1506-		6255	-	11 *2	-	-	-
65.3	15300	1560	**91700**	**9350**	**1.20**	77.7	12800	1310	**87500**	**8910**	**1.20**	**1506-**		**6245**	**-**	**15 *2**	**-**	**-**	**-**
			113000	11500	1.37				108000	11000	1.37	1506-		6255	-	15 *2	-	-	-
46.7	21400	2180	**102000**	**10400**	**1.09**	55.5	18000	1830	**97500**	**9940**	**1.09**	**1506-**		**6245**	**-**	**21 *2**	**-**	**-**	**-**
			126000	12800	1.37				120000	12200	1.37	1506-		6255	-	21 *2	-	-	-
33.8	29500	3010	**138000**	**14000**	**1.07**	40.2	24800	2530	**131000**	**13400**	**1.07**	**1506-**		**6255**	**-**	**29 *2**	**-**	**-**	**-**
			170000	17300	1.45				162000	16500	1.45	1506-		6265	-	29 *2	-	-	-
22.8	43800	4460	**189000**	**19300**	**1.03**	27.1	36800	3750	**180000**	**18400**	**1.03**	**1506-**		**6265**	**-**	**43 *2**	**-**	**-**	**-**

6. "*2" indicate models manufactured with reducer and motor separately mounted on a common baseplate (horizontal shaft direction) or on an adaptor (vertical shaft direction). Consult us for details, including dimensions.
7. Allowable radial load (Pro) is the value at the midpoint of the slow speed shaft.
8. "*3" indicate models with reduction ratios equal to nominal ratio. Refer to Table A-3 "6000SK Series (Actual Reduction Ratio)" on page A-4 for actual reduction ratio. Indicated reduction ratio is the same as actual reduction ratio for other models.
9. Maintain torque load during operation within "Output torque" in the table for models with "*1" in the SF column. They cannot be operated with 100% motor rating.

Selection Tables Gearmotors

n_1: Motor Speed

132 kW	Hz	50Hz		60Hz	
	P	4	6	4	6
	n_1 r/min	1450	980	1750	1165

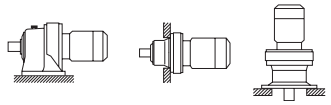

CHHM/CNHM CHFM/CNFM CVVM/CNVM

50Hz						60Hz						Nomenclature				Page of Dimension Sheet		
Output Speed n_2 [r/min]	Output Torque Tout [N·m]	[kgf·m]	Allowable Radial Load Pro [N]	[kgf]	SF	Output Speed n_2 [r/min]	Output Torque Tout [N·m]	[kgf·m]	Allowable Radial Load Pro [N]	[kgf]	SF	Input Capacity Symbol	- Frame Size	- Reduction Ratio		CNHM CHHM	CNFM CHFM	CNVM CVVM
89.1	13400	1370	**105000**	**10700**	**1.14**	106	11300	1150	**99900**	**10200**	**1.14**	**1756-**	**6255**	**- 11 *2**		**-**	**-**	**-**
			129000	13100	1.33				123000	12500	1.33	1756-	6265	- 11 *2		-	-	-
65.3	18300	1870	**112000**	**11500**	**1.14**	77.7	15400	1570	**107000**	**10900**	**1.14**	**1756-**	**6255**	**- 15 *2**		**-**	**-**	**-**
			138000	14000	1.33				131000	13400	1.33	1756-	6265	- 15 *2		-	-	-
46.7	25700	2620	**125000**	**12700**	**1.14**	55.5	21600	2200	**119000**	**12100**	**1.14**	**1756-**	**6255**	**- 21 *2**		**-**	**-**	**-**
			154000	15700	1.30				146000	14900	1.30	1756-	6265	- 21 *2		-	-	-
33.8	35400	3610	**169000**	**17200**	**1.20**	40.2	29800	3040	**161000**	**16400**	**1.20**	**1756-**	**6265**	**- 29 *2**		**-**	**-**	**-**

1. Combinations in **bold** are the recommended models for operations for 10 hours/day with uniform load (service factor is about 1.0 for motor rating at 50Hz).
2. Motor slippage may affect n_1 and n_2. Refer to technical data for details.
3. CNHM, CHHM, CNFM, CHFM, CNVM, and CVVM indicate types. Refer to page B-10 for details.
4. Lubrication method is different for each model. Refer to "Lubrication" section in page F-4~F-5 for details.
5. "6" at the end of "input capacity symbol" indicates models with 6P motor. Other models come with 4P motor.
6. "*2" indicate models manufactured with reducer and motor separately mounted on a common baseplate (horizontal shaft direction) or on an adaptor (vertical shaft direction). Consult us for details, including dimensions.
7. Allowable radial load (Pro) is the value at the midpoint of the slow speed shaft.
8. "*3" indicate models with reduction ratios equal to nominal ratio. Refer to Table A-3 "6000SK Series (Actual Reduction Ratio)" on page A-4 for actual reduction ratio. Indicated reduction ratio is the same as actual reduction ratio for other models.
9. Maintain torque load during operation within "Output torque" in the table for models with "*1" in the SF column. They cannot be operated with 100% motor rating.

MEMO

M E M O

B CYCLO® GEARMOTORS

3. Dimension Tables

Dimension Tables Gearmotors (Horizontal Direction, Foot-Mount)

CHHM□ - 607□SK to 609□SK

Note: 1

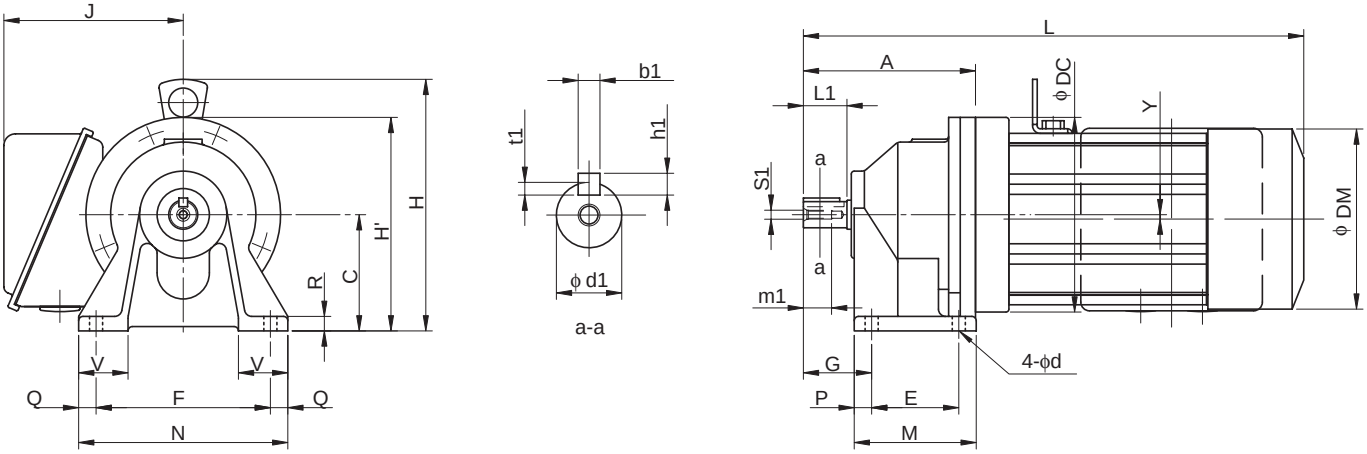

Frame size Note: 4	A	C	DC	E	F	G	M	N	P	Q	R	V	Y	d	Output Shaft Note: 2, 3, 6						
															d1	L1	b1	h1	t1	S1	m1
607□SK	119	80	134	60	120	47	84	144	12	12	10	34	0	9	18	30	6	6	3.5	M6	16
608□SK	140	90	150	75	120	52	99	144	12	12	13	37	0	9	22	35	6	6	3.5	M6	16
609□SK	166	100	150	90	150	60	135	180	15	15	12	40	0	11	28	35	8	7	4	M8	20

Model Note: 4, 5	Motor		Standard						With Brake					
	[kW]	[P]	L	H	H'	J	DM	W [kg]	L	H	H'	J	DM	W [kg]
CHHM05 - 607□SK - (B) - Ratio	0.4	4	310	-	147	130	124	10	342	-	147	130	124	11
CHHM08 - 607□SK - (B) - Ratio	0.55	4	351	193	-	140	148	13	394	193	-	140	148	15
CHHM1 - 607□SK - (B) - Ratio	0.75	4	351	193	-	140	148	13	394	193	-	140	148	15
CHHM05 - 608□SK - (B) - Ratio	0.4	4	336	-	165	130	124	11	368	-	165	130	124	12
CHHM08 - 608□SK - (B) - Ratio	0.55	4	377	203	-	140	148	14	420	203	-	140	148	16
CHHM1 - 608□SK - (B) - Ratio	0.75	4	377	203	-	140	148	14	420	203	-	140	148	16
CHHM1H - 608□SK - (B) - Ratio	1.1	4	410	210	-	145	160	19	472	210	-	145	160	23
CHHM2 - 608□SK - (B) - Ratio	1.5	4	410	210	-	145	160	19	472	210	-	145	160	23
CHHM05 - 609□SK - (B) - Ratio	0.4	4	362	207	-	130	124	13	349	207	-	130	124	14
CHHM08 - 609□SK - (B) - Ratio	0.55	4	403	213	-	140	148	16	446	213	-	140	148	18
CHHM1 - 609□SK - (B) - Ratio	0.75	4	403	213	-	140	148	16	446	213	-	140	148	18
CHHM1H - 609□SK - (B) - Ratio	1.1	4	436	220	-	145	160	21	498	220	-	145	160	25
CHHM2 - 609□SK - (B) - Ratio	1.5	4	436	220	-	145	160	21	498	220	-	145	160	25
CHHM3 - 609□SK - (B) - Ratio	2.2	4	456	226	-	152	173	25	519	226	-	152	173	31

Note: 1. □ indicates motor capacity.
2. Dimension of shaft end diameter: Dimension tolerance conforms to JIS B 0401-1976 "h6."
3. Dimension of shaft end key: Dimension tolerance conforms to JIS B 1301-1996 "Parallel Key."

Dimension Tables Gearmotors (Horizontal Direction, Foot-Mount)

CHHM□ (Note: 1) - 610□SK to 611□SK

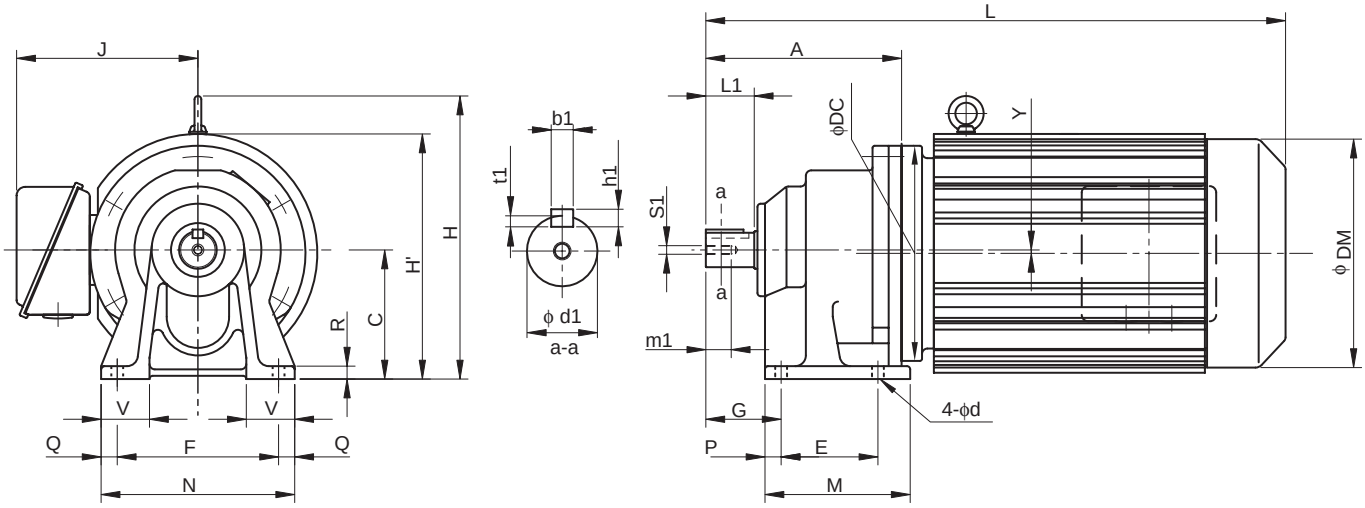

Frame size (Note: 4)	A	C	DC	E	F	G	M	N	P	Q	R	V	Y	d	Output Shaft (Note: 2, 3, 6) d1	L1	b1	h1	t1	S1	m1
610□SK	170	100	162	90	150	60	135	180	15	15	12	40	0	11	28	35	8	7	4	M8	20
611□SK	182	120	204	90	150	70	135	180	15	15	12	45	3	11	32	45	10	8	5	M8	20

Model (Note: 4, 5)	Motor [kW]	Motor [P]	Standard L	Standard H	Standard H'	Standard J	Standard DM	Standard W [kg]	With Brake L	With Brake H	With Brake H'	With Brake J	With Brake DM	With Brake W [kg]
CHHM05 - 610□SK - (B) - Ratio	0.4	4	362	216	-	130	124	14	393	216	-	130	124	15
CHHM08 - 610□SK - (B) - Ratio	0.55	4	403	216	-	140	148	17	452	216	-	140	148	19
CHHM1 - 610□SK - (B) - Ratio	0.75	4	403	216	-	140	148	17	452	216	-	140	148	19
CHHM1H - 610□SK - (B) - Ratio	1.1	4	436	220	-	145	160	22	493	220	-	145	160	26
CHHM2 - 610□SK - (B) - Ratio	1.5	4	436	220	-	145	160	22	493	220	-	145	160	26
CHHM3 - 610□SK - (B) - Ratio	2.2	4	456	226	-	152	173	26	519	226	-	152	173	32
CHHM4 - 610□SK - (B) - Ratio	3.0	4	491	246	-	168	212	38	563	246	-	168	212	49
CHHM5 - 610□SK - (B) - Ratio	3.7	4	491	246	-	168	212	38	563	246	-	168	212	49
CHHM08 - 611□SK - (B) - Ratio	0.55	4	419	230	-	140	148	29	462	230	-	140	148	31
CHHM1 - 611□SK - (B) - Ratio	0.75	4	419	230	-	140	148	29	462	230	-	140	148	31
CHHM1H - 611□SK - (B) - Ratio	1.1	4	452	237	-	145	160	34	514	237	-	145	160	38
CHHM2 - 611□SK - (B) - Ratio	1.5	4	452	237	-	145	160	34	514	237	-	145	160	38
CHHM3 - 611□SK - (B) - Ratio	2.2	4	472	243	-	152	173	38	535	243	-	152	173	44
CHHM4 - 611□SK - (B) - Ratio	3.0	4	495	263	-	168	212	50	567	263	-	168	212	61
CHHM5 - 611□SK - (B) - Ratio	3.7	4	495	263	-	168	212	50	567	263	-	168	212	61
CHHM8 - 611□SK - (B) - Ratio	5.5	4	539	263	-	168	212	58	611	263	-	168	212	69

Note: 4. □ indicates 0 or 5, expressing combination with reduction ratio. Refer to the Selection Table for details.
5. "B" after the frame size indicates models equipped with brake.
6. Dimension of shaft end: Refer to pages F-28 to F-29 for details.
7. Dimensions in above drawings are subject to change without notice.

Dimension Tables Gearmotors (Universal Direction, Foot-Mount)

CNHM□ - 606□ to 609□ (Note: 1)

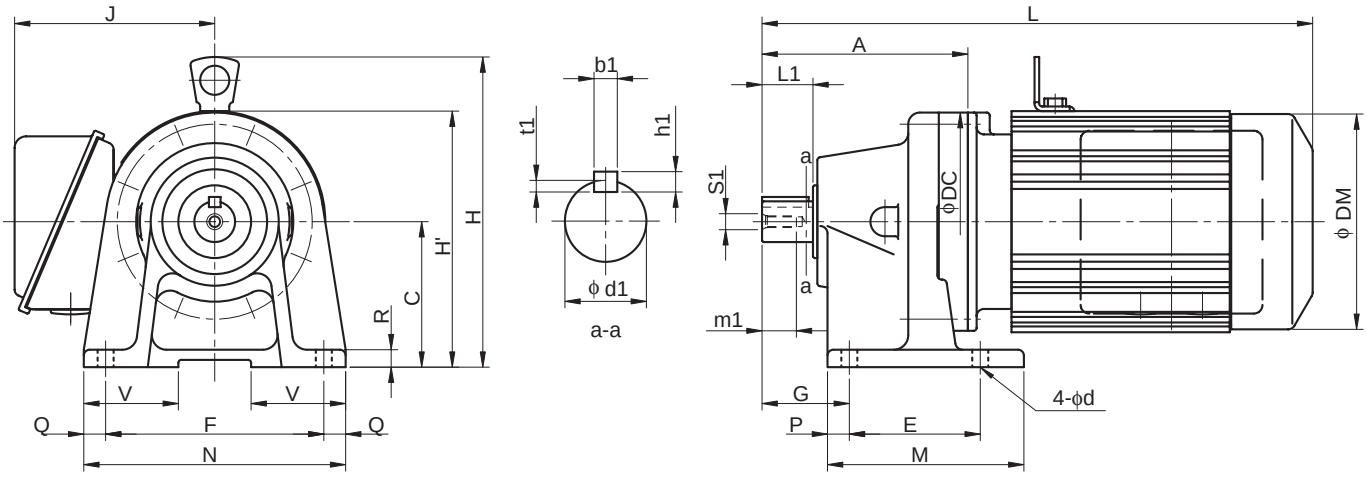

Frame size (Note: 4)	A	C	DC	E	F	G	M	N	P	Q	R	V	d	Output Shaft (Note: 2, 3, 6) d1	L1	b1	h1	t1	S1	m1
606□	92	80	110	60	120	41	84	144	12	12	10	35	9	14	25	5	5	3	M5	16
607□	98	80	110	60	120	47	84	144	12	12	10	35	9	18	30	6	6	3.5	M6	16
608□	129	90	134	75	120	52	99	144	12	12	13	37	9	22	35	6	6	3.5	M6	16
609□	142	100	150	90	150	60	135	180	15	15	12	40	11	28	35	8	7	4	M8	20

Model (Note: 4, 5)	Motor [kW]	Motor [P]	Standard L	Standard H	Standard H'	Standard J	Standard DM	Standard W [kg]	With Brake L	With Brake H	With Brake H'	With Brake J	With Brake DM	With Brake W [kg]
CNHM01 - 606□ - (B) - Ratio	0.1	4	254	-	140	130	119	7	261	-	138	130	124	8
CNHM02 - 606□ - (B) - Ratio	0.2	4	272	-	138	130	124	8	300	-	138	130	124	9
CNHM03 - 606□ - (B) - Ratio	0.25	4	272	-	138	130	124	8	300	-	138	130	124	9
CNHM01 - 607□ - (B) - Ratio	0.1	4	260	-	140	130	119	7	267	-	138	130	124	8
CNHM02 - 607□ - (B) - Ratio	0.2	4	278	-	138	130	124	8	306	-	138	130	124	9
CNHM03 - 607□ - (B) - Ratio	0.25	4	278	-	138	130	124	8	306	-	138	130	124	9
CNHM05 - 607□ - (B) - Ratio	0.4	4	294	-	138	130	124	9	326	-	138	130	124	10
CNHM01 - 608□ - (B) - Ratio	0.1	4	286	-	157	130	119	10	293	-	157	130	124	11
CNHM02 - 608□ - (B) - Ratio	0.2	4	304	-	157	130	124	11	332	-	157	130	124	12
CNHM03 - 608□ - (B) - Ratio	0.25	4	304	-	157	130	124	11	332	-	157	130	124	12
CNHM05 - 608□ - (B) - Ratio	0.4	4	320	-	157	130	124	13	352	-	157	130	124	14
CNHM08 - 608□ - (B) - Ratio	0.55	4	361	203	-	140	148	17	404	203	-	140	148	18
CNHM1 - 608□ - (B) - Ratio	0.75	4	361	203	-	140	148	17	404	203	-	140	148	18
CNHM01 - 609□ - (B) - Ratio	0.1	4	304	-	175	130	119	12	311	-	175	130	124	14
CNHM02 - 609□ - (B) - Ratio	0.2	4	322	-	175	130	124	13	350	-	175	130	124	15
CNHM03 - 609□ - (B) - Ratio	0.25	4	322	-	175	130	124	13	350	-	175	130	124	15
CNHM05 - 609□ - (B) - Ratio	0.4	4	338	-	175	130	124	14	370	-	175	130	124	16
CNHM08 - 609□ - (B) - Ratio	0.55	4	379	213	-	140	148	18	422	213	-	140	148	21
CNHM1 - 609□ - (B) - Ratio	0.75	4	379	213	-	140	148	18	422	213	-	140	148	21
CNHM1H - 609□ - (B) - Ratio	1.1	4	412	220	-	145	160	21	474	220	-	145	160	26
CNHM2 - 609□ - (B) - Ratio	1.5	4	412	220	-	145	160	21	474	220	-	145	160	26

Note: 1. □ indicates motor capacity.
2. Dimension of shaft end diameter: Dimension tolerance conforms to JIS B 0401-1976 "h6."
3. Dimension of shaft end key: Dimension tolerance conforms to JIS B 1301-1996 "Parallel Key."

Dimension Tables Gearmotors (Universal Direction, Foot-Mount)

CNHM□- 610□ to 612□ (Note: 1)

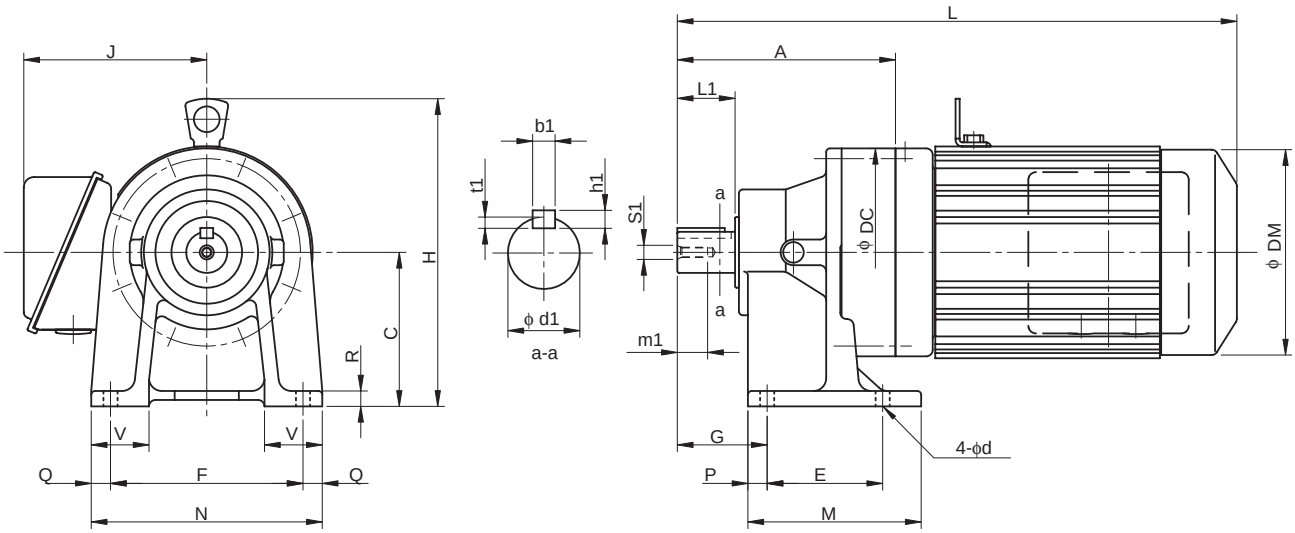

Frame size (Note: 4)	A	C	DC	E	F	G	M	N	P	Q	R	V	d	Output Shaft (Note: 2, 3, 6) d1	L1	b1	h1	t1	S1	m1
610□	156	100	150	90	150	60	135	180	15	15	12	40	11	28	35	8	7	4	M8	20
611□	170	120	162	90	150	70	135	180	15	15	12	45	11	32	45	10	8	5	M8	20
612□	186	120	204	115	190	82	155	230	20	20	15	55	14	38	55	10	8	5	M8	20

Model (Note: 4, 5)	Motor [kW]	Motor [P]	Standard L	Standard H	Standard J	Standard DM	Standard W [kg]	With Brake L	With Brake H	With Brake J	With Brake DM	With Brake W [kg]
CNHM02 - 610□ - (B) - Ratio	0.2	4	336	207	130	124	18	364	207	130	124	20
CNHM03 - 610□ - (B) - Ratio	0.25	4	336	207	130	124	18	364	207	130	124	20
CNHM05 - 610□ - (B) - Ratio	0.4	4	352	207	130	124	19	384	207	130	124	21
CNHM08 - 610□ - (B) - Ratio	0.55	4	393	213	140	148	23	436	213	140	148	26
CNHM1 - 610□ - (B) - Ratio	0.75	4	393	213	140	148	23	436	213	140	148	26
CNHM1H - 610□ - (B) - Ratio	1.1	4	426	220	145	160	27	488	220	145	160	32
CNHM2 - 610□ - (B) - Ratio	1.5	4	426	220	145	160	27	488	220	145	160	32
CNHM3 - 610□ - (B) - Ratio	2.2	4	446	226	152	173	31	509	226	152	173	37
CNHM05 - 611□ - (B) - Ratio	0.4	4	363	236	130	124	20	394	236	130	124	21
CNHM08 - 611□ - (B) - Ratio	0.55	4	403	236	140	148	23	452	236	140	148	26
CNHM1 - 611□ - (B) - Ratio	0.75	4	403	236	140	148	23	452	236	140	148	26
CNHM1H - 611□ - (B) - Ratio	1.1	4	436	240	145	160	26	493	240	145	160	31
CNHM2 - 611□ - (B) - Ratio	1.5	4	436	240	145	160	26	493	240	145	160	31
CNHM3 - 611□ - (B) - Ratio	2.2	4	456	246	152	173	30	519	246	152	173	36
CNHM4 - 611□ - (B) - Ratio	3.0	4	491	266	168	212	40	563	266	168	212	50
CNHM5 - 611□ - (B) - Ratio	3.7	4	491	266	168	212	40	563	266	168	212	50
CNHM05 - 612□ - (B) - Ratio	0.4	4	387	257	130	124	30	419	257	130	124	32
CNHM08 - 612□ - (B) - Ratio	0.55	4	423	233	140	148	32	466	233	140	148	35
CNHM1 - 612□ - (B) - Ratio	0.75	4	423	233	140	148	32	466	233	140	148	35
CNHM1H - 612□ - (B) - Ratio	1.1	4	456	240	145	160	36	518	240	145	160	41
CNHM2 - 612□ - (B) - Ratio	1.5	4	456	240	145	160	36	518	240	145	160	41
CNHM3 - 612□ - (B) - Ratio	2.2	4	476	246	152	173	40	539	246	152	173	47
CNHM4 - 612□ - (B) - Ratio	3.0	4	499	266	168	212	50	571	266	168	212	60
CNHM5 - 612□ - (B) - Ratio	3.7	4	499	266	168	212	50	571	266	168	212	60
CNHM8 - 612□ - (B) - Ratio	5.5	4	543	266	168	212	57	615	266	168	212	67

Note: 4. □ indicates 0 or 5, expressing combination with reduction ratio. Refer to the Selection Table for details.
5. "B" after the frame size indicates models equipped with brake.
6. Dimension of shaft end: Refer to pages F-28 to F-29 for details.
7. Dimensions in above drawings are subject to change without notice.

Dimension Tables Gearmotors (Horizontal Direction, Foot-Mount)

CHHM□ Note: 1 - 613□ to 614□

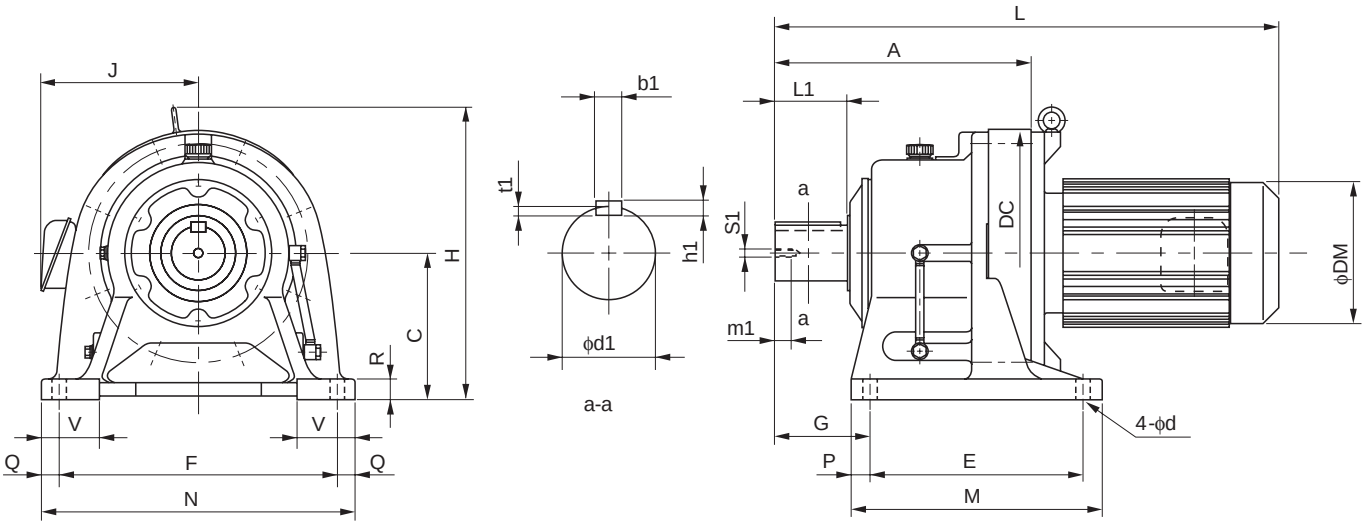

Frame size Note: 4	A	C	DC	E	F	G	M	N	P	Q	R	V	d	Output Shaft Note: 2, 3, 6						
														d1	L1	b1	h1	t1	S1	m1
613□	240	150	230	145	290	100	195	330	25	20	22	65	18	50	70	14	9	5.5	M10	18
614□	260	150	230	145	290	120	195	330	25	20	22	65	18	50	90	14	9	5.5	M10	18

Model Note: 4, 5	Motor		Standard					With Brake				
	[kW]	[P]	L	H	J	DM	W [kg]	L	H	J	DM	W [kg]
CHHM08 - 613□ - (B) - Ratio	0.55	4	477	265	140	148	51	520	265	140	148	54
CHHM1 - 613□ - (B) - Ratio	0.75	4	477	265	140	148	51	520	265	140	148	54
CHHM1H - 613□ - (B) - Ratio	1.1	4	510	268	145	160	55	572	268	145	160	60
CHHM2 - 613□ - (B) - Ratio	1.5	4	510	268	145	160	55	572	268	145	160	60
CHHM3 - 613□ - (B) - Ratio	2.2	4	530	274	152	173	58	593	274	152	173	65
CHHM4 - 613□ - (B) - Ratio	3.0	4	553	296	168	212	68	625	296	168	212	78
CHHM5 - 613□ - (B) - Ratio	3.7	4	553	296	168	212	68	625	296	168	212	78
CHHM8 - 613□ - (B) - Ratio	5.5	4	597	296	168	212	75	669	296	168	212	85
CHHM10 - 613□ - (B) - Ratio	7.5	4	620	323	213	251	90	715	323	213	251	108
CHHM15 - 613□ - (B) - Ratio	11	4	680	323	213	251	104	775	323	213	251	121
CHHM1 - 614□ - (B) - Ratio	0.75	4	497	268	140	148	52	540	268	140	148	55
CHHM1H - 614□ - (B) - Ratio	1.1	4	530	268	145	160	56	592	268	145	160	61
CHHM2 - 614□ - (B) - Ratio	1.5	4	530	268	145	160	56	592	268	145	160	61
CHHM3 - 614□ - (B) - Ratio	2.2	4	550	274	152	173	59	613	274	152	173	66
CHHM4 - 614□ - (B) - Ratio	3.0	4	573	296	168	212	69	645	296	168	212	79
CHHM5 - 614□ - (B) - Ratio	3.7	4	573	296	168	212	69	645	296	168	212	79
CHHM8 - 614□ - (B) - Ratio	5.5	4	617	296	168	212	76	689	296	168	212	86
CHHM10 - 614□ - (B) - Ratio	7.5	4	640	323	213	251	91	735	323	213	251	109
CHHM15 - 614□ - (B) - Ratio	11	4	700	323	213	251	104	795	323	213	251	122
CHHM20 - 614□ - (B) - Ratio	15	4	790	358	261	324	156	880	321	261	324	190

Note: 1. □ indicates motor capacity.
2. Dimension of shaft end diameter: Dimension tolerance conforms to JIS B 0401-1976 "h6."
3. Dimension of shaft end key: Dimension tolerance conforms to JIS B 1301-1996 "Parallel Key."

Dimension Tables Gearmotors (Horizontal Direction, Foot-Mount)

CHHM□ - 616□ to 617□ (Note: 1)

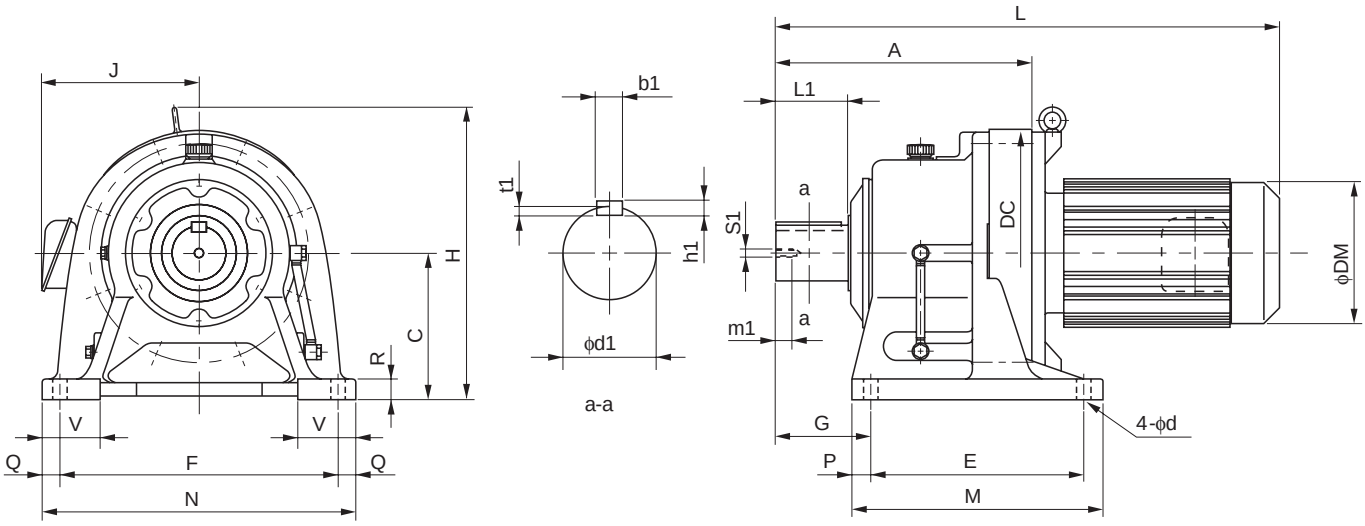

Frame size (Note: 4)	A	C	DC	E	F	G	M	N	P	Q	R	V	d	Output Shaft (Note: 2, 3, 6) d1	L1	b1	h1	t1	S1	m1
616□	308	160	300	150	370	139	238	410	44	20	25	75	18	60	90	18	11	7	M10	18
617□	352	200	340	275	380	125	335	430	30	25	30	80	22	70	90	20	12	7.5	M12	24

Model (Note: 4, 5)	Motor [kW]	Motor [P]	Standard L	Standard H	Standard J	Standard DM	Standard W [kg]	With Brake L	With Brake H	With Brake J	With Brake DM	With Brake W [kg]
CHHM1H - 616□ - (B) - Ratio	1.1	4	583	310	145	160	93	645	310	145	160	99
CHHM2 - 616□ - (B) - Ratio	1.5	4	583	310	145	160	93	645	310	145	160	99
CHHM3 - 616□ - (B) - Ratio	2.2	4	598	310	152	173	96	661	310	152	173	103
CHHM4 - 616□ - (B) - Ratio	3.0	4	621	310	168	212	105	693	310	168	212	116
CHHM5 - 616□ - (B) - Ratio	3.7	4	621	310	168	212	105	693	310	168	212	116
CHHM8 - 616□ - (B) - Ratio	5.5	4	665	310	168	212	112	737	310	168	212	123
CHHM10 - 616□ - (B) - Ratio	7.5	4	693	333	213	251	128	788	333	213	251	146
CHHM15 - 616□ - (B) - Ratio	11	4	753	333	213	251	142	848	333	213	251	160
*CHHM20 - 616□ - (B) - Ratio	15	4	838	368	261	324	195	928	368	261	324	230
*CHHM25 - 616□ - (B) - Ratio	18.5	4	933	368	340	394	267	1098	368	340	394	323
*CHHM30 - 616□ - (B) - Ratio	22	4	933	368	340	394	267	1098	368	340	394	323
CHHM4 - 617□ - (B) - Ratio	3.0	4	680	403	168	212	146	752	403	168	212	157
CHHM5 - 617□ - (B) - Ratio	3.7	4	680	403	168	212	146	752	403	168	212	157
CHHM8 - 617□ - (B) - Ratio	5.5	4	724	403	168	212	153	796	403	168	212	164
CHHM10 - 617□ - (B) - Ratio	7.5	4	742	403	213	251	168	837	403	213	251	187
CHHM15 - 617□ - (B) - Ratio	11	4	802	403	213	251	182	897	403	213	251	201
CHHM20 - 617□ - (B) - Ratio	15	4	882	413	259	324	236	987	413	259	324	271
CHHM25 - 617□ - (B) - Ratio	18.5	4	977	428	340	394	304	1142	428	340	394	360
CHHM30 - 617□ - (B) - Ratio	22	4	977	428	340	394	304	1142	428	340	394	360
CHHM40 - 617□ - (B) - Ratio	30	4	977	428	340	394	321	1142	428	340	394	369

"*" indicates models with bottom level of the motor lower than the reducer base.
Refer to pages B-152 and B-153 for center hight options.

Note: 4. □ indicates 0 or 5, expressing combination with reduction ratio. Refer to the Selection Table for details.
5. "B" after the frame size indicates models equipped with brake.
6. Dimension of shaft end: Refer to pages F-28 to F-29 for details.
7. Dimensions in above drawings are subject to change without notice.

Dimension Tables Gearmotors (Horizontal Direction, Foot-Mount)

CHHM□ Note: 1 - 618□ to 619□

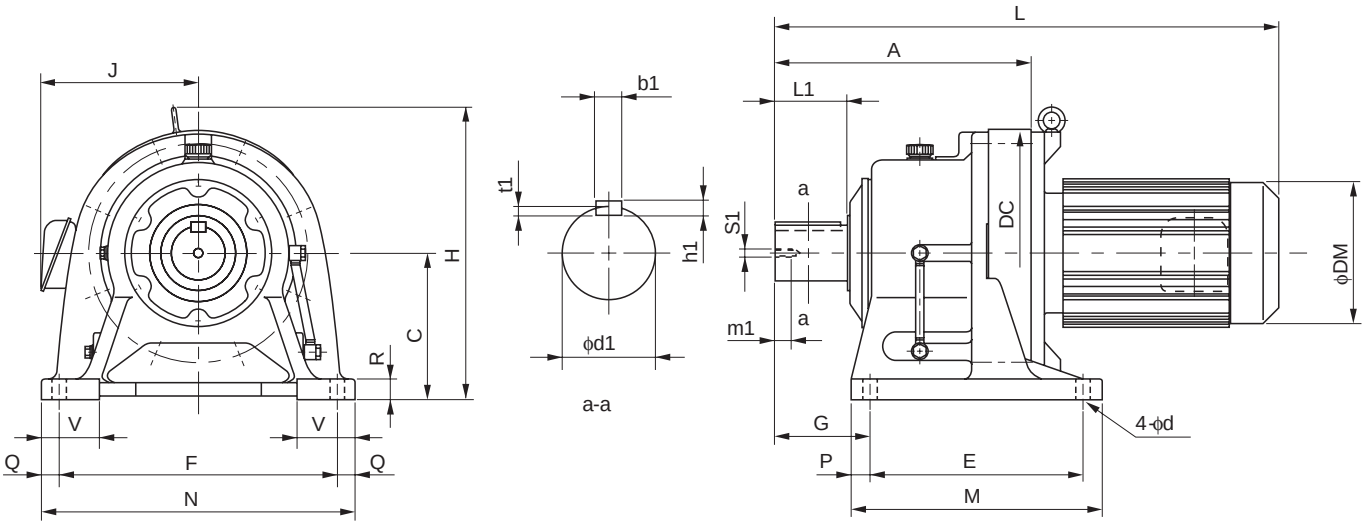

Frame size Note: 4	A	C	DC	E	F	G	M	N	P	Q	R	V	d	Output Shaft Note: 2, 3, 6						
														d1	L1	b1	h1	t1	S1	m1
618□	389	220	370	320	420	145	380	470	30	25	30	85	22	80	110	22	14	9	M12	24
619□	465	250	430	380	480	170	440	530	30	25	35	90	26	95	135	25	14	9	M20	34

Model Note: 4, 5	Motor		Standard					With Brake				
	[kW]	[P]	L	H	J	DM	W [kg]	L	H	J	DM	W [kg]
CHHM4 - 618□ - (B) - Ratio	3.0	4	717	438	168	212	184	789	438	168	212	194
CHHM5 - 618□ - (B) - Ratio	3.7	4	717	438	168	212	184	789	438	168	212	194
CHHM8 - 618□ - (B) - Ratio	5.5	4	761	438	168	212	192	833	438	168	212	202
CHHM10 - 618□ - (B) - Ratio	7.5	4	779	438	213	251	207	874	438	213	251	225
CHHM15 - 618□ - (B) - Ratio	11	4	839	438	213	251	221	934	438	213	251	239
CHHM20 - 618□ - (B) - Ratio	15	4	919	438	261	324	281	1024	438	261	324	310
CHHM25 - 618□ - (B) - Ratio	18.5	4	1014	448	340	394	347	1179	448	340	394	398
CHHM30 - 618□ - (B) - Ratio	22	4	1014	448	340	394	347	1179	448	340	394	398
CHHM40 - 618□ - (B) - Ratio	30	4	1014	448	340	394	364	1179	448	340	394	407
CHHM50 - 618□ - (B) - Ratio	37	4	1129	481	340	394	412	1344	481	340	394	509
CHHM60 - 618□ - (B) - Ratio	45	4	1129	481	340	394	412	1344	481	340	394	509
CHHM8 - 619□ - (B) - Ratio	5.5	4	857	511	168	212	266	929	511	168	212	276
CHHM10 - 619□ - (B) - Ratio	7.5	4	870	511	213	251	279	965	511	213	251	297
CHHM15 - 619□ - (B) - Ratio	11	4	930	511	213	251	293	1025	511	213	251	311
CHHM20 - 619□ - (B) - Ratio	15	4	995	467	261	324	346	1100	467	261	324	381
CHHM25 - 619□ - (B) - Ratio	18.5	4	1090	511	340	394	422	1255	511	340	394	467
CHHM256 - 619□ - (B) - Ratio	18.5	6	1090	511	340	394	437	1255	511	340	394	480
CHHM30 - 619□ - (B) - Ratio	22	4	1090	511	340	394	422	1255	511	340	394	467
CHHM40 - 619□ - (B) - Ratio	30	4	1090	511	340	394	437	1255	511	340	394	480
CHHM406 - 619□ - (B) - Ratio	30	6	1205	511	340	394	475	1420	511	340	394	572
CHHM50 - 619□ - (B) - Ratio	37	4	1205	511	340	394	475	1420	511	340	394	572
CHHM506 - 619□ - (B) - Ratio	37	6	1205	511	340	394	475	1420	511	340	394	572
CHHM60 - 619□ - (B) - Ratio	45	4	1205	511	340	394	475	1420	511	340	394	572

Note: 1. □ indicates motor capacity.
2. Dimension of shaft end diameter: Dimension tolerance conforms to JIS B 0401-1976 "h6."
3. Dimension of shaft end key: Dimension tolerance conforms to JIS B 1301-1996 "Parallel Key."

Dimension Tables Gearmotors (Horizontal Direction, Foot-Mount)

CHHM□ - 6205 to 6215 (Note: 1)

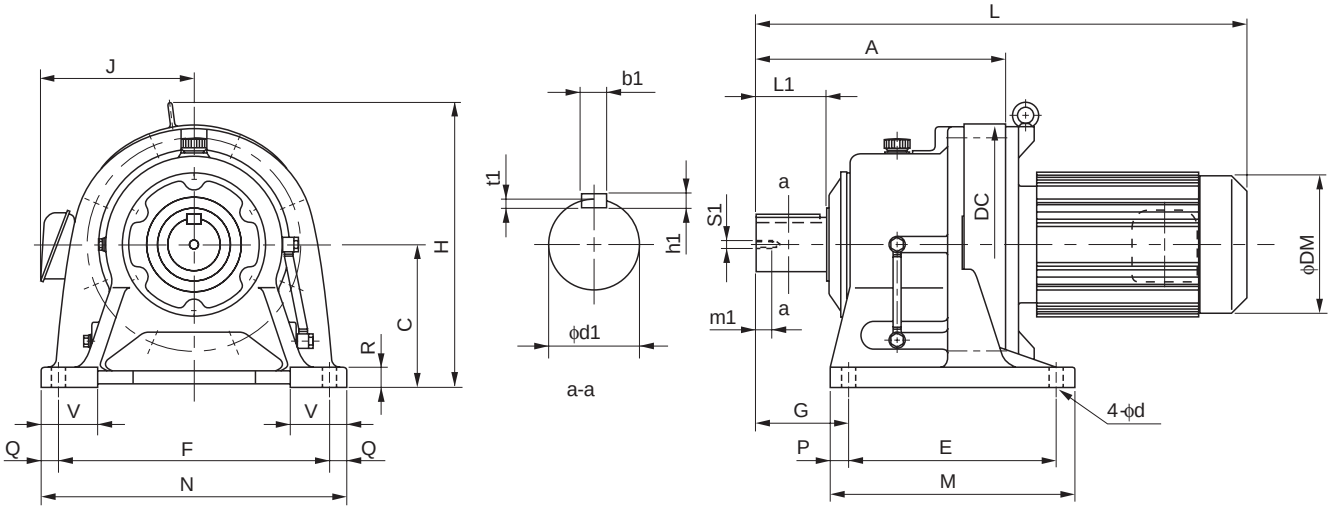

Frame size	A	C	DC	E	F	G	M	N	P	Q	R	V	d	Output Shaft (Note: 2, 3, 6) d1	L1	b1	h1	t1	S1	m1
6205	502	250	448	360	440	215	440	530	40	45	35	100	26	100	165	28	16	10	M20	34
6215	526	265	485	395	480	210	475	580	40	50	40	110	26	110	165	28	16	10	M20	34

Model (Note: 5)	Motor [kW]	Motor [P]	Standard L	Standard H	Standard J	Standard DM	Standard W [kg]	With Brake L	With Brake H	With Brake J	With Brake DM	With Brake W [kg]
CHHM15 - 6205 - (B) - Ratio	11	4	972	530	213	251	313	1067	530	213	251	332
CHHM20 - 6205 - (B) - Ratio	15	4	1042	530	261	324	367	1147	530	261	324	404
CHHM206 - 6205 - (B) - Ratio	15	6	1127	530	340	394	438	1292	530	340	394	484
CHHM25 - 6205 - (B) - Ratio	18.5	4	1127	530	340	394	438	1292	530	340	394	488
CHHM30 - 6205 - (B) - Ratio	22	4	1127	530	340	394	438	1292	530	340	394	488
CHHM306 - 6205 - (B) - Ratio	22	6	1127	530	340	394	451	1292	530	340	394	501
CHHM40 - 6205 - (B) - Ratio	30	4	1127	530	340	394	451	1292	530	340	394	501
CHHM406 - 6205 - (B) - Ratio	30	6	1242	530	340	394	489	1457	530	340	394	588
CHHM50 - 6205 - (B) - Ratio	37	4	1242	530	340	394	489	1457	530	340	394	588
CHHM506 - 6205 - (B) - Ratio	37	6	1242	530	340	394	489	1457	530	340	394	588
CHHM60 - 6205 - (B) - Ratio	45	4	1242	530	340	394	489	1457	530	340	394	588
CHHM606 - 6205 - (B) - Ratio	45	6	1297	575	390	484	582	-	-	-	-	-
CHHM75 - 6205 - (B) - Ratio	55	4	1297	575	390	484	582	-	-	-	-	-
CHHM15 - 6215 - (B) - Ratio	11	4	996	575	213	251	395	1091	575	213	251	414
CHHM20 - 6215 - (B) - Ratio	15	4	1066	575	261	324	450	1171	575	261	324	486
CHHM206 - 6215 - (B) - Ratio	15	6	1151	575	340	394	515	1316	575	340	394	565
CHHM25 - 6215 - (B) - Ratio	18.5	4	1151	575	340	394	515	1316	575	340	394	565
CHHM256 - 6215 - (B) - Ratio	18.5	6	1151	575	340	394	528	1316	575	340	394	578
CHHM30 - 6215 - (B) - Ratio	22	4	1151	575	340	394	515	1316	575	340	394	565
CHHM306 - 6215 - (B) - Ratio	22	6	1151	575	340	394	528	1316	575	340	394	578
CHHM40 - 6215 - (B) - Ratio	30	4	1151	575	340	394	528	1316	575	340	394	578
CHHM406 - 6215 - (B) - Ratio	30	6	1266	575	340	394	566	1481	575	340	394	666
CHHM50 - 6215 - (B) - Ratio	37	4	1266	575	340	394	566	1481	575	340	394	666
CHHM506 - 6215 - (B) - Ratio	37	6	1266	575	340	394	566	1481	575	340	394	666
CHHM60 - 6215 - (B) - Ratio	45	4	1266	575	340	394	566	1481	575	340	394	666
CHHM606 - 6215 - (B) - Ratio	45	6	1321	575	390	484	676	-	-	-	-	-
CHHM75 - 6215 - (B) - Ratio	55	4	1321	575	390	484	676	-	-	-	-	-

Note: 4. □ indicates 0 or 5, expressing combination with reduction ratio. Refer to the Selection Table for details.
5. "B" after the frame size indicates models equipped with brake.
6. Dimension of shaft end: Refer to pages F-28 to F-29 for details.
7. Dimensions in above drawings are subject to change without notice.

Dimension Tables Gearmotors (Horizontal Direction, Foot-Mount)

CHHM□ - 6225 to 6235 (Note: 1)

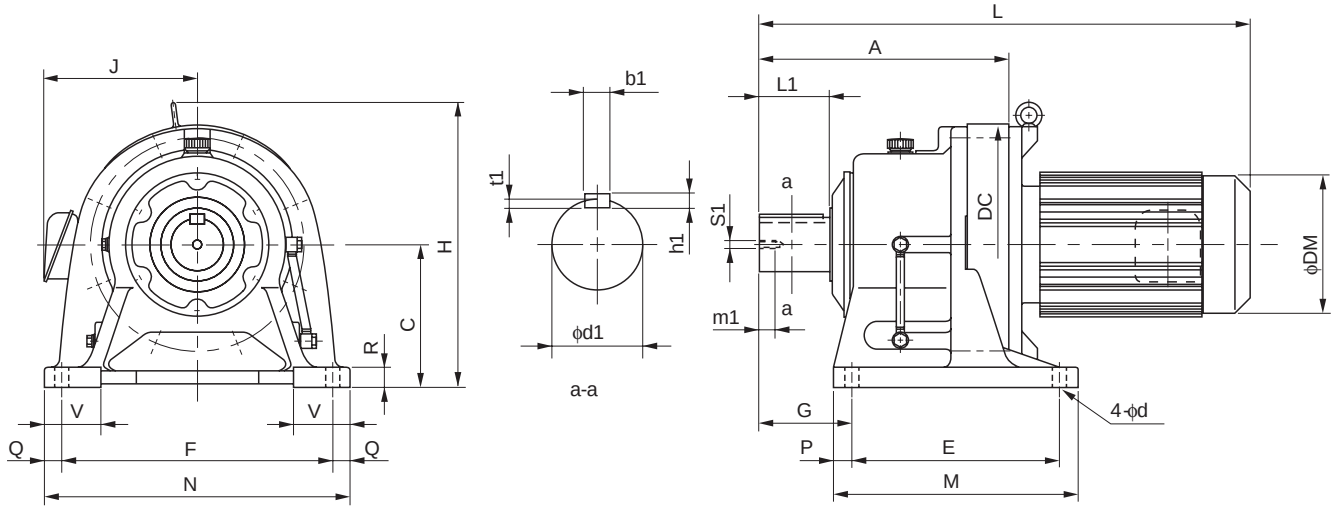

Frame size	A	C	DC	E	F	G	M	N	P	Q	R	V	d	Output Shaft (Note: 2, 3, 5) d1	L1	b1	h1	t1	S1	m1
6225	566	280	526	420	540	230	520	620	50	40	40	115	33	120	165	32	18	11	M20	34
6235	628	300	562	460	580	260	560	670	50	45	45	120	33	130	200	32	18	11	M24	41

Model (Note: 4)	Motor [kW]	Motor [P]	Standard L	Standard H	Standard J	Standard DM	Standard W [kg]	With Brake L	With Brake H	With Brake J	With Brake DM	With Brake W [kg]
CHHM206 - 6225 - (B) - Ratio	15	6	1191	610	340	394	600	1356	610	340	394	650
CHHM25 - 6225 - (B) - Ratio	18.5	4	1191	610	340	394	600	1356	610	340	394	650
CHHM256 - 6225 - (B) - Ratio	18.5	6	1191	610	340	394	613	1356	610	340	394	663
CHHM30 - 6225 - (B) - Ratio	22	4	1191	610	340	394	600	1356	610	340	394	650
CHHM306 - 6225 - (B) - Ratio	22	6	1191	610	340	394	613	1356	610	340	394	663
CHHM40 - 6225 - (B) - Ratio	30	4	1191	610	340	394	613	1356	610	340	394	663
CHHM406 - 6225 - (B) - Ratio	30	6	1306	610	340	394	651	1521	610	340	394	751
CHHM50 - 6225 - (B) - Ratio	37	4	1306	610	340	394	651	1521	610	340	394	751
CHHM506 - 6225 - (B) - Ratio	37	6	1306	610	340	394	651	1521	610	340	394	751
CHHM60 - 6225 - (B) - Ratio	45	4	1306	610	340	394	651	1521	610	340	394	751
CHHM606 - 6225 - (B) - Ratio	45	6	1361	610	390	484	750	-	-	-	-	-
CHHM75 - 6225 - (B) - Ratio	55	4	1361	610	390	484	750	-	-	-	-	-
CHHM206 - 6235 - (B) - Ratio	15	6	1253	667	340	394	698	1448	667	340	394	734
CHHM256 - 6235 - (B) - Ratio	18.5	6	1253	667	340	394	698	1448	667	340	394	748
CHHM306 - 6235 - (B) - Ratio	22	6	1253	667	340	394	698	1448	667	340	394	748
CHHM406 - 6235 - (B) - Ratio	30	6	1368	667	340	394	744	1583	667	340	394	837
CHHM506 - 6235 - (B) - Ratio	37	6	1368	667	340	394	744	1583	667	340	394	837
CHHM606 - 6235 - (B) - Ratio	45	6	1423	667	390	484	833	-	-	-	-	-
CHHM756 - 6235 - (B) - Ratio	55	6	1503	667	390	485	887	-	-	-	-	-

Note: 1. □ indicates motor capacity.
2. Dimension of shaft end diameter: Dimension tolerance conforms to JIS B 0401-1976 "h6."
3. Dimension of shaft end key: Dimension tolerance conforms to JIS B 1301-1996 "Parallel Key."

Dimension Tables Gearmotors (Horizontal Direction, Foot-Mount)

CHHM□ - 6245 to 6265 (Note: 1)

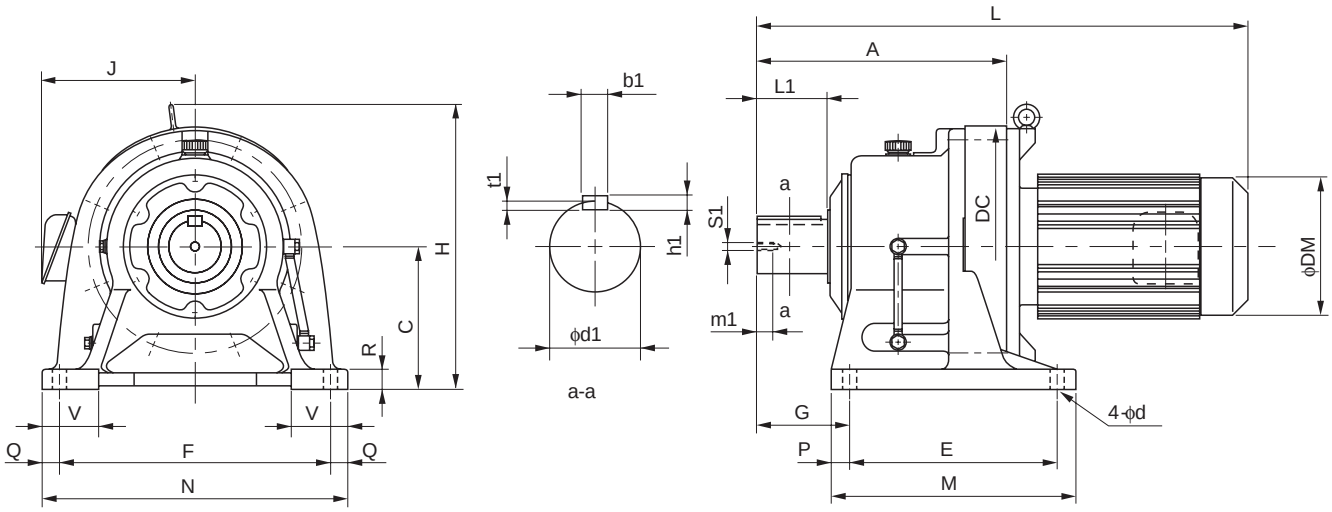

Frame size	A	C	DC	E	F	G	M	N	P	Q	R	V	d	Output Shaft (Note: 2, 3, 5) d1	L1	b1	h1	t1	S1	m1
6245	657	335	614	480	630	263	580	720	50	45	45	128	39	140	200	36	20	12	M24	41
6255	775	375	670	520	670	320	630	780	55	55	50	140	39	160	240	40	22	13	M30	49
6265	892	400	736	590	770	390	700	880	55	55	55	160	45	170	300	40	22	13	M30	49

Model (Note: 4)	Motor [kW]	Motor [P]	Standard L	Standard H	Standard J	Standard DM	Standard W [kg]	With Brake L	With Brake H	With Brake J	With Brake DM	With Brake W [kg]
CHHM206 - 6245 - (B) - Ratio	15	6	1282	729	340	394	824	1447	729	340	394	857
CHHM256 - 6245 - (B) - Ratio	18.5	6	1282	729	340	394	824	1447	729	340	394	871
CHHM306 - 6245 - (B) - Ratio	22	6	1282	729	340	394	824	1447	729	340	394	871
CHHM406 - 6245 - (B) - Ratio	30	6	1397	729	340	394	870	1612	729	340	394	958
CHHM506 - 6245 - (B) - Ratio	37	6	1397	729	340	394	870	1612	729	340	394	958
CHHM606 - 6245 - (B) - Ratio	45	6	1452	729	390	484	961	-	-	-	-	-
CHHM756 - 6245 - (B) - Ratio	55	6	1532	729	390	485	1010	-	-	-	-	-
CHHM206 - 6255 - (B) - Ratio	15	6	1400	815	340	394	1155	1565	815	340	394	1188
CHHM256 - 6255 - (B) - Ratio	18.5	6	1400	815	340	394	1155	1610	815	340	394	1202
CHHM306 - 6255 - (B) - Ratio	22	6	1400	815	340	394	1155	1610	815	340	394	1202
CHHM406 - 6255 - (B) - Ratio	30	6	1515	815	340	394	1200	1730	815	340	394	1288
CHHM506 - 6255 - (B) - Ratio	37	6	1515	815	340	394	1200	1730	815	340	394	1288
CHHM606 - 6255 - (B) - Ratio	45	6	1570	815	390	484	1280	-	-	-	-	-
CHHM756 - 6255 - (B) - Ratio	55	6	1650	815	390	485	1335	-	-	-	-	-
CHHM306 - 6265 - (B) - Ratio	22	6	1517	874	340	394	1400	1727	874	340	394	1447
CHHM406 - 6265 - (B) - Ratio	30	6	1632	874	340	394	1445	1847	874	340	394	1533
CHHM506 - 6265 - (B) - Ratio	37	6	1632	874	340	394	1445	1847	874	340	394	1533
CHHM606 - 6265 - (B) - Ratio	45	6	1687	874	390	484	1540	-	-	-	-	-

Note: 4. "B" after the frame size indicates models equipped with brake.
5. Dimension of shaft end: Refer to pages F-28 to F-29 for details.
6. Dimensions in above drawings are subject to change without notice.

Dimension Tables Gearmotors (Universal Direction, Foot-Mount)

CNHM□ - 606□DA to 612□DB

Note: 1

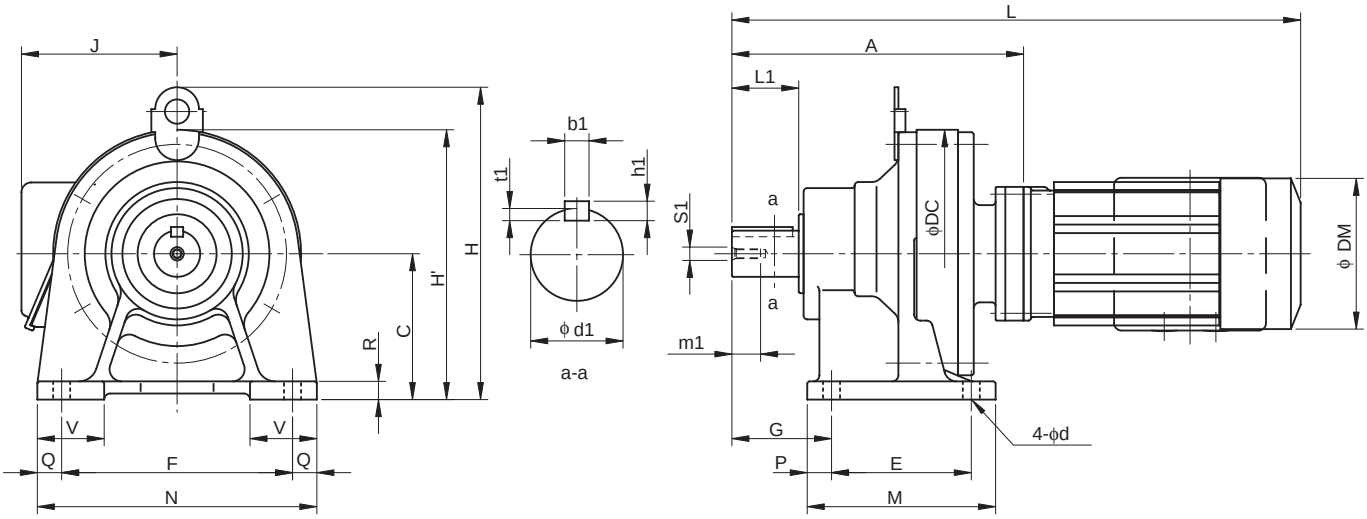

Frame size Note: 4	A	C	DC	E	F	G	M	N	P	Q	R	V	d	Output Shaft Note: 2, 3, 6						
														d1	L1	b1	h1	t1	S1	m1
606□DA	125	80	110	60	120	41	84	144	12	12	10	35	9	14	25	5	5	3	M5	16
607□DA	131	80	110	60	120	47	84	144	12	12	10	35	9	18	30	6	6	3.5	M6	16
609□DA	190	100	150	90	150	60	135	180	15	15	12	40	11	28	35	8	7	4	M8	20
610□DA	204	100	150	90	150	60	135	180	15	15	12	40	11	28	35	8	7	4	M8	20
612□DA	240	120	204	115	190	82	155	230	20	20	15	55	14	38	55	10	8	5	M8	20
612□DB	252	120	204	115	190	82	155	230	20	20	15	55	14	38	55	10	8	5	M8	20

Model Note: 4, 5	Motor		Standard						With Brake					
	[kW]	[P]	L	H	H'	J	DM	W [kg]	L	H	H'	J	DM	W [kg]
CNHM01 - 606□DA - (B) - Ratio	0.1	4	287	-	140	130	119	9	294	-	138	130	124	10
CNHM01 - 607□DA - (B) - Ratio	0.1	4	293	-	140	130	119	9	300	-	138	130	124	10
CNHM02 - 607□DA - (B) - Ratio	0.2	4	311	-	140	130	124	10	339	-	138	130	124	11
CNHM01 - 609□DA - (B) - Ratio	0.1	4	352	207	-	130	119	17	359	207	-	130	124	18
CNHM02 - 609□DA - (B) - Ratio	0.2	4	370	207	-	130	124	18	398	207	-	130	124	19
CNHM03 - 609□DA - (B) - Ratio	0.25	4	370	207	-	130	124	18	398	207	-	130	124	19
CNHM05 - 609□DA - (B) - Ratio	0.4	4	386	207	-	130	124	19	418	207	-	130	124	20
CNHM01 - 610□DA - (B) - Ratio	0.1	4	366	207	-	130	119	19	373	207	-	130	124	20
CNHM02 - 610□DA - (B) - Ratio	0.2	4	384	207	-	130	124	20	412	207	-	130	124	21
CNHM03 - 610□DA - (B) - Ratio	0.25	4	384	207	-	130	124	20	412	207	-	130	124	21
CNHM05 - 610□DA - (B) - Ratio	0.4	4	400	207	-	130	124	21	432	207	-	130	124	22
CNHM01 - 612□DA - (B) - Ratio	0.1	4	402	257	-	130	119	30	409	257	-	130	124	31
CNHM02 - 612□DA - (B) - Ratio	0.2	4	420	257	-	130	124	31	448	257	-	130	124	32
CNHM03 - 612□DA - (B) - Ratio	0.25	4	420	257	-	130	124	31	448	257	-	130	124	32
CNHM05 - 612□DA - (B) - Ratio	0.4	4	436	257	-	130	124	32	468	257	-	130	124	33
CNHM01 - 612□DB - (B) - Ratio	0.1	4	414	257	-	130	119	33	421	257	-	130	124	35
CNHM02 - 612□DB - (B) - Ratio	0.2	4	432	257	-	130	124	34	473	257	-	130	124	36
CNHM03 - 612□DB - (B) - Ratio	0.25	4	432	257	-	130	124	34	473	257	-	130	124	36
CNHM05 - 612□DB - (B) - Ratio	0.4	4	448	257	-	130	124	35	473	257	-	130	124	37
CNHM08 - 612□DB - (B) - Ratio	0.55	4	489	257	-	140	148	39	532	257	-	140	148	42
CNHM1 - 612□DB - (B) - Ratio	0.75	4	489	257	-	140	148	39	532	257	-	140	148	42
CNHM1H - 612□DB - (B) - Ratio	1.1	4	516	257	-	145	160	42	578	257	-	145	160	47
CNHM2 - 612□DB - (B) - Ratio	1.5	4	516	257	-	145	160	42	578	257	-	145	160	47

Note: 1. □ indicates motor capacity.
2. Dimension of shaft end diameter: Dimension tolerance conforms to JIS B 0401-1976 "h6."
3. Dimension of shaft end key: Dimension tolerance conforms to JIS B 1301-1996 "Parallel Key."

Dimension Tables Gearmotors (Horizontal Direction, Foot-Mount)

CHHM□ (Note: 1) - 613□DA to 614□DC

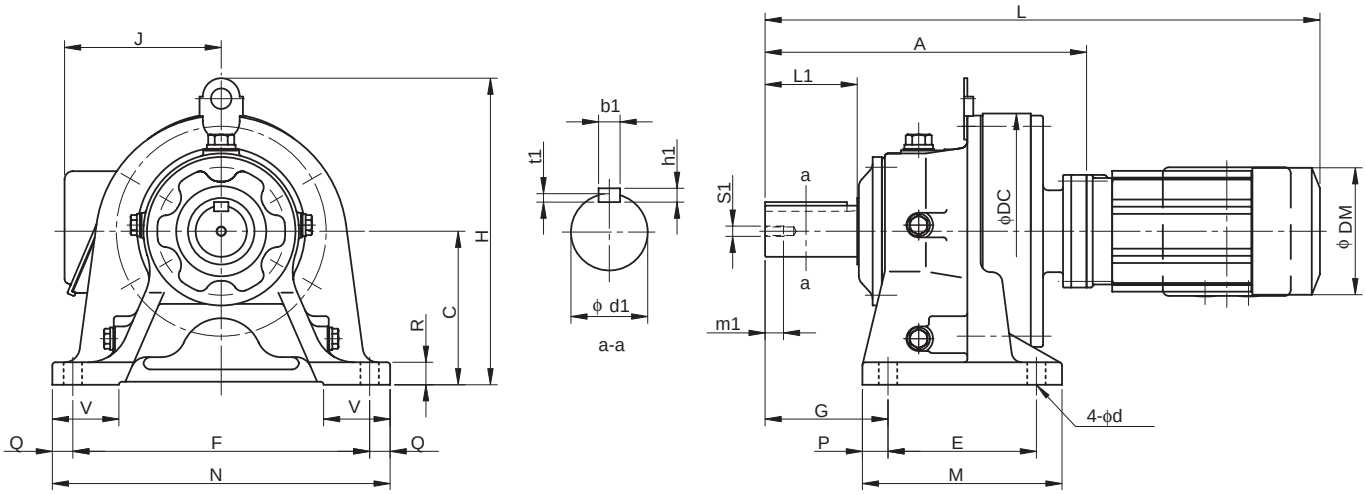

Frame size (Note: 4)	A	C	DC	E	F	G	M	N	P	Q	R	V	d	Output Shaft (Note: 2, 3, 6) d1	L1	b1	h1	t1	S1	m1
613□DA	294	150	230	145	290	100	195	330	25	20	22	65	18	50	70	14	9	5.5	M10	18
613□DB	303	150	230	145	290	100	195	330	25	20	22	65	18	50	70	14	9	5.5	M10	18
613□DC	317	150	230	145	290	100	195	330	25	20	22	65	18	50	70	14	9	5.5	M10	18
614□DA	314	150	230	145	290	120	195	330	25	20	22	65	18	50	90	14	9	5.5	M10	18
614□DB	323	150	230	145	290	120	195	330	25	20	22	65	18	50	90	14	9	5.5	M10	18
614□DC	337	150	230	145	290	120	195	330	25	20	22	65	18	50	90	14	9	5.5	M10	18

Model (Note: 4, 5)	Motor [kW]	Motor [P]	Standard L	Standard H	Standard J	Standard DM	Standard W [kg]	With Brake L	With Brake H	With Brake J	With Brake DM	With Brake W [kg]
CHHM02 - 613□DA - (B) - Ratio	0.2	4	474	300	130	124	47	502	300	130	124	47
CHHM03 - 613□DA - (B) - Ratio	0.25	4	474	300	130	124	48	522	300	130	124	49
CHHM05 - 613□DA - (B) - Ratio	0.4	4	490	300	130	124	48	522	300	130	124	49
CHHM02 - 613□DB - (B) - Ratio	0.2	4	483	300	130	124	49	511	300	130	124	51
CHHM03 - 613□DB - (B) - Ratio	0.25	4	483	300	130	124	49	511	300	130	124	51
CHHM05 - 613□DB - (B) - Ratio	0.4	4	499	300	130	124	50	531	300	130	124	52
CHHM08 - 613□DB - (B) - Ratio	0.55	4	540	263	140	148	54	583	263	140	148	57
CHHM1 - 613□DB - (B) - Ratio	0.75	4	540	263	140	148	54	583	263	140	148	57
CHHM1H - 613□DB - (B) - Ratio	1.1	4	573	270	145	160	57	635	270	145	160	62
CHHM2 - 613□DB - (B) - Ratio	1.5	4	573	270	145	160	57	635	270	145	160	62
CHHM08 - 613□DC - (B) - Ratio	0.55	4	554	265	140	148	56	597	265	140	148	59
CHHM1 - 613□DC - (B) - Ratio	0.75	4	554	265	140	148	56	597	265	140	148	59
CHHM2 - 613□DC - (B) - Ratio	1.5	4	587	272	145	160	59	649	272	145	160	64
CHHM3 - 613□DC - (B) - Ratio	2.2	4	607	276	152	173	64	670	276	152	173	70
CHHM02 - 614□DA - (B) - Ratio	0.2	4	494	300	130	124	47	522	300	130	124	48
CHHM03 - 614□DA - (B) - Ratio	0.25	4	494	300	130	124	47	522	300	130	124	48
CHHM05 - 614□DA - (B) - Ratio	0.4	4	510	300	130	124	48	542	300	130	124	49
CHHM02 - 614□DB - (B) - Ratio	0.2	4	503	300	130	124	49	531	300	130	124	51
CHHM03 - 614□DB - (B) - Ratio	0.25	4	503	300	130	124	49	531	300	130	124	51
CHHM05 - 614□DB - (B) - Ratio	0.4	4	519	300	130	124	50	551	300	130	124	52
CHHM08 - 614□DB - (B) - Ratio	0.55	4	560	263	140	148	54	603	263	140	148	57
CHHM1 - 614□DB - (B) - Ratio	0.75	4	560	263	140	148	54	603	263	140	148	57
CHHM1H - 614□DB - (B) - Ratio	1.1	4	593	270	145	160	57	655	270	145	160	62
CHHM2 - 614□DB - (B) - Ratio	1.5	4	593	270	145	160	57	655	270	145	160	62
CHHM08 - 614□DC - (B) - Ratio	0.55	4	574	265	140	148	56	617	265	140	148	59
CHHM1 - 614□DC - (B) - Ratio	0.75	4	574	265	140	148	56	617	265	140	148	59
CHHM1H - 614□DC - (B) - Ratio	1.1	4	607	270	145	160	60	669	270	145	160	65
CHHM2 - 614□DC - (B) - Ratio	1.5	4	607	270	145	160	60	669	270	145	160	65
CHHM3 - 614□DC - (B) - Ratio	2.2	4	627	276	152	173	64	690	276	152	173	70

Note: 4. □ indicates 0 or 5, expressing combination with reduction ratio. Refer to the Selection Table for details.
5. "B" after the frame size indicates models equipped with brake.
6. Dimension of shaft end: Refer to pages F-28 to F-29 for details.
7. Dimensions in above drawings are subject to change without notice.

Dimension Tables Gearmotors (Horizontal Direction, Foot-Mount)

CHHM□ Note: 1 - 616□DA to 618□DA

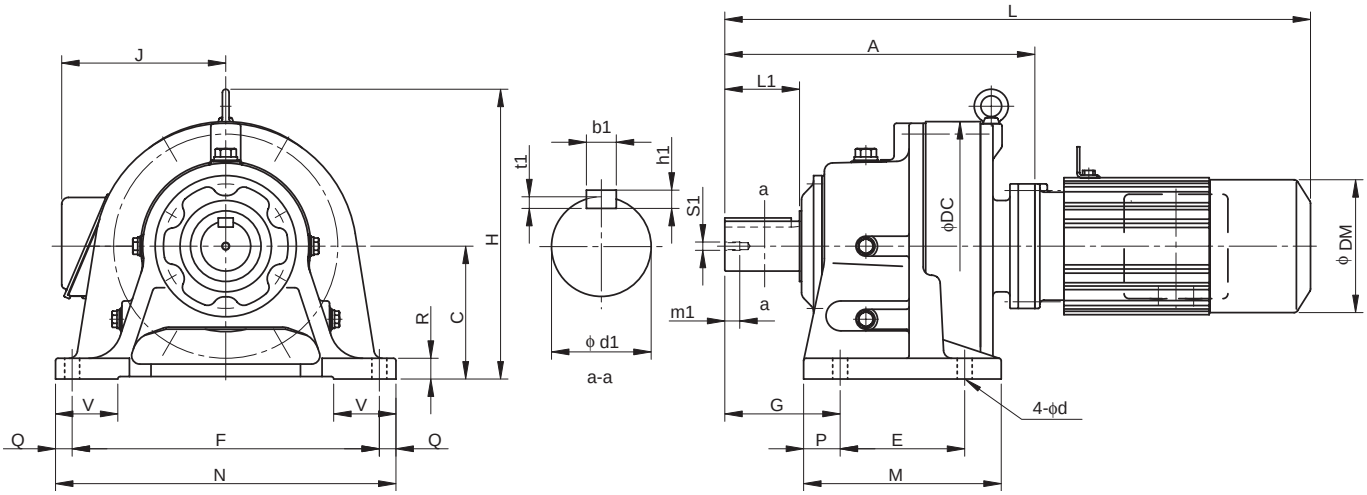

Frame size Note: 4	A	C	DC	E	F	G	M	N	P	Q	R	V	d	Output Shaft Note: 2, 3, 6						
														d1	L1	b1	h1	t1	S1	m1
616□DA	373	160	300	150	370	139	238	410	44	20	25	75	18	60	90	18	11	7	M10	18
616□DB	387	160	300	150	370	139	238	410	44	20	25	75	18	60	90	18	11	7	M10	18
617□DA	418	200	340	275	380	125	335	430	30	25	30	80	22	70	90	20	12	7.5	M12	24
617□DB	432	200	340	275	380	125	335	430	30	25	30	80	22	70	90	20	12	7.5	M12	24
618□DA	474	220	370	320	420	145	380	470	30	25	30	85	22	80	110	22	14	9	M12	24

Model Note: 4, 5	Motor		Standard					With Brake				
	[kW]	[P]	L	H	J	DM	W [kg]	L	H	J	DM	W [kg]
CHHM02 - 616□DA - (B) - Ratio	0.2	4	553	349	130	124	90	581	349	130	124	92
CHHM03 - 616□DA - (B) - Ratio	0.25	4	553	349	130	124	90	581	349	130	124	92
CHHM05 - 616□DA - (B) - Ratio	0.4	4	569	349	130	124	91	601	349	130	124	93
CHHM08 - 616□DA - (B) - Ratio	0.55	4	610	349	140	148	95	653	349	140	148	98
CHHM1 - 616□DA - (B) - Ratio	0.75	4	610	349	140	148	95	653	349	140	148	98
CHHM1H - 616□DA - (B) - Ratio	1.1	4	643	349	145	160	99	705	349	145	160	104
CHHM2 - 616□DA - (B) - Ratio	1.5	4	643	349	145	160	99	705	349	145	160	104
CHHM08 - 616□DB - (B) - Ratio	0.55	4	624	349	140	148	97	667	349	140	148	100
CHHM1 - 616□DB - (B) - Ratio	0.75	4	624	349	140	148	97	667	349	140	148	100
CHHM1H - 616□DB - (B) - Ratio	1.1	4	657	349	145	160	101	719	349	145	160	106
CHHM2 - 616□DB - (B) - Ratio	1.5	4	657	349	145	160	101	719	349	145	160	106
CHHM3 - 616□DB - (B) - Ratio	2.2	4	677	349	152	173	105	740	349	152	173	111
CHHM02 - 617□DA - (B) - Ratio	0.2	4	598	416	130	124	120	626	416	130	124	127
CHHM03 - 617□DA - (B) - Ratio	0.25	4	598	416	130	124	120	626	416	130	124	127
CHHM05 - 617□DA - (B) - Ratio	0.4	4	614	416	130	124	126	646	416	130	124	128
CHHM08 - 617□DA - (B) - Ratio	0.55	4	655	416	140	148	130	698	416	140	148	133
CHHM1 - 617□DA - (B) - Ratio	0.75	4	655	416	140	148	130	698	416	140	148	133
CHHM1H - 617□DA - (B) - Ratio	1.1	4	688	416	145	160	133	750	416	145	160	138
CHHM2 - 617□DA - (B) - Ratio	1.5	4	688	416	145	160	133	750	416	145	160	138
CHHM08 - 617□DB - (B) - Ratio	0.55	4	669	416	140	148	127	712	416	140	148	134
CHHM1 - 617□DB - (B) - Ratio	0.75	4	669	416	140	148	127	712	416	140	148	134
CHHM1H - 617□DB - (B) - Ratio	1.1	4	702	416	145	160	136	764	416	145	160	141
CHHM2 - 617□DB - (B) - Ratio	1.5	4	702	416	145	160	136	764	416	145	160	141
CHHM3 - 617□DB - (B) - Ratio	2.2	4	722	416	152	173	140	785	416	152	173	146
CHHM05 - 618□DA - (B) - Ratio	0.4	4	670	451	130	124	171	702	451	130	124	173
CHHM08 - 618□DA - (B) - Ratio	0.55	4	711	451	140	148	175	754	451	140	148	178
CHHM1 - 618□DA - (B) - Ratio	0.75	4	711	451	140	148	175	754	451	140	148	178
CHHM1H - 618□DA - (B) - Ratio	1.1	4	744	451	145	160	179	806	451	145	160	184
CHHM2 - 618□DA - (B) - Ratio	1.5	4	744	451	145	160	179	806	451	145	160	184
CHHM3 - 618□DA - (B) - Ratio	2.2	4	764	451	152	173	183	827	451	152	173	189

Note: 1. □ indicates motor capacity.
2. Dimension of shaft end diameter: Dimension tolerance conforms to JIS B 0401-1976 "h6."
3. Dimension of shaft end key: Dimension tolerance conforms to JIS B 1301-1996 "Parallel Key."

Dimension Tables Gearmotors (Horizontal Direction, Foot-Mount)

CHHM□ (Note: 1) - 616□DC to 619□DA

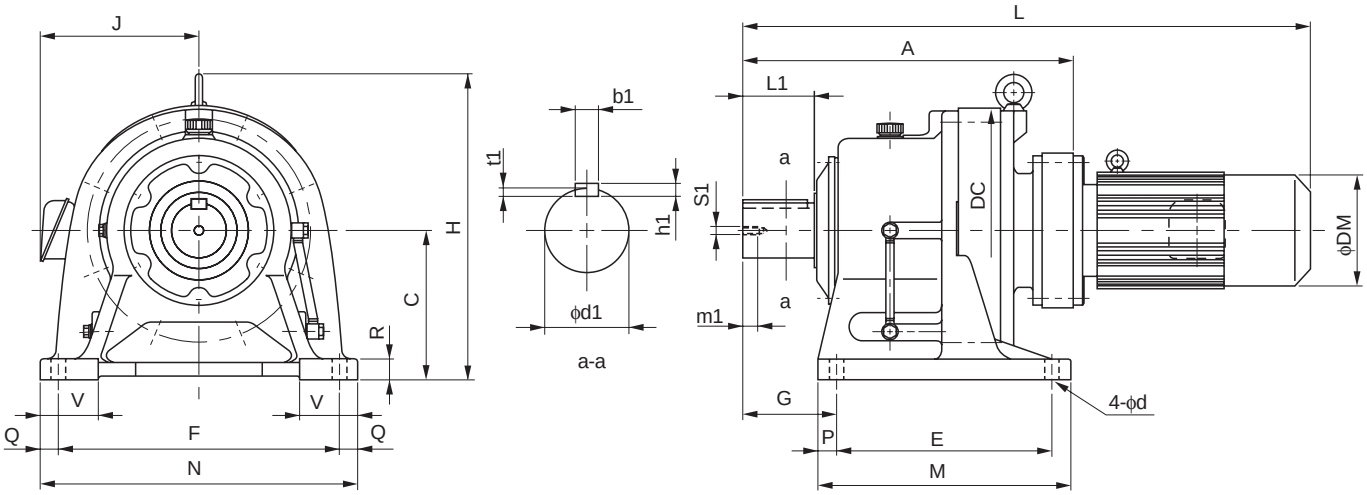

Frame size (Note: 4)	A	C	DC	E	F	G	M	N	P	Q	R	V	d	Output Shaft (Note: 2, 3, 6) d1	L1	b1	h1	t1	S1	m1
616□DC	389	160	300	150	370	139	238	410	44	20	25	75	18	60	90	18	11	7	M10	18
617□DC	436	200	340	275	380	125	335	430	30	25	30	80	22	70	90	20	12	7.5	M12	24
618□DB	496	220	370	320	420	145	380	470	30	25	30	85	22	80	110	22	14	9	M12	24
619□DA	556	250	430	380	480	170	440	530	30	25	35	90	26	95	135	25	14	9	M20	34

Model (Note: 4, 5)	Motor [kW]	Motor [P]	Standard L	Standard H	Standard J	Standard DM	Standard W [kg]	With Brake L	With Brake H	With Brake J	With Brake DM	With Brake W [kg]
CHHM1H - 616□DC - (B) - Ratio	1.1	4	659	349	145	160	107	721	349	145	160	112
CHHM2 - 616□DC - (B) - Ratio	1.5	4	659	349	145	160	107	721	349	145	160	112
CHHM3 - 616□DC - (B) - Ratio	2.2	4	679	349	152	173	111	742	349	152	173	118
CHHM4 - 616□DC - (B) - Ratio	3.0	4	702	349	168	212	121	774	349	168	212	131
CHHM5 - 616□DC - (B) - Ratio	3.7	4	702	349	168	212	121	774	349	168	212	131
CHHM8 - 616□DC - (B) - Ratio	5.5	4	746	349	168	212	128	818	349	168	212	138
CHHM1H - 617□DC - (B) - Ratio	1.1	4	706	416	145	160	141	768	416	145	160	146
CHHM2 - 617□DC - (B) - Ratio	1.5	4	706	416	145	160	141	768	416	145	160	146
CHHM3 - 617□DC - (B) - Ratio	2.2	4	726	416	152	173	145	789	416	152	173	152
CHHM4 - 617□DC - (B) - Ratio	3.0	4	749	416	168	212	155	821	416	168	212	165
CHHM5 - 617□DC - (B) - Ratio	3.7	4	749	416	168	212	155	821	416	168	212	165
CHHM8 - 617□DC - (B) - Ratio	5.5	4	793	416	168	212	162	865	416	168	212	172
CHHM1H - 618□DB - (B) - Ratio	1.1	4	766	451	145	160	194	828	451	145	160	199
CHHM2 - 618□DB - (B) - Ratio	1.5	4	766	451	145	160	194	828	451	145	160	199
CHHM3 - 618□DB - (B) - Ratio	2.2	4	786	451	152	173	197	849	451	152	173	204
CHHM4 - 618□DB - (B) - Ratio	3.0	4	809	451	168	212	207	881	451	168	212	217
CHHM5 - 618□DB - (B) - Ratio	3.7	4	809	451	168	212	207	881	451	168	212	217
CHHM8 - 618□DB - (B) - Ratio	5.5	4	853	451	168	212	214	925	451	168	212	224
CHHM10 - 618□DB - (B) - Ratio	7.5	4	876	451	213	251	229	971	451	213	251	247
CHHM15 - 618□DB - (B) - Ratio	11	4	936	451	213	251	243	1031	451	213	251	261
CHHM1 - 619□DA - (B) - Ratio	0.75	4	793	531	140	148	250	836	531	140	148	253
CHHM1H - 619□DA - (B) - Ratio	1.1	4	826	531	145	160	254	888	531	145	160	259
CHHM2 - 619□DA - (B) - Ratio	1.5	4	826	531	145	160	254	888	531	145	160	259
CHHM3 - 619□DA - (B) - Ratio	2.2	4	846	531	152	173	258	909	531	152	173	265
CHHM4 - 619□DA - (B) - Ratio	3.0	4	869	531	168	212	268	941	531	168	212	278
CHHM5 - 619□DA - (B) - Ratio	3.7	4	869	531	168	212	268	941	531	168	212	278
CHHM8 - 619□DA - (B) - Ratio	5.5	4	913	531	168	212	275	985	531	168	212	285

Note: 4. □ indicates 0 or 5, expressing combination with reduction ratio. Refer to the Selection Table for details.
5. "B" after the frame size indicates models equipped with brake.
6. Dimension of shaft end: Refer to pages F-28 to F-29 for details.
7. Dimensions in above drawings are subject to change without notice.

Dimension Tables Gearmotors (Horizontal Direction, Foot-Mount)

CHHM□ Note: 1 - 619□DB to 6215DA

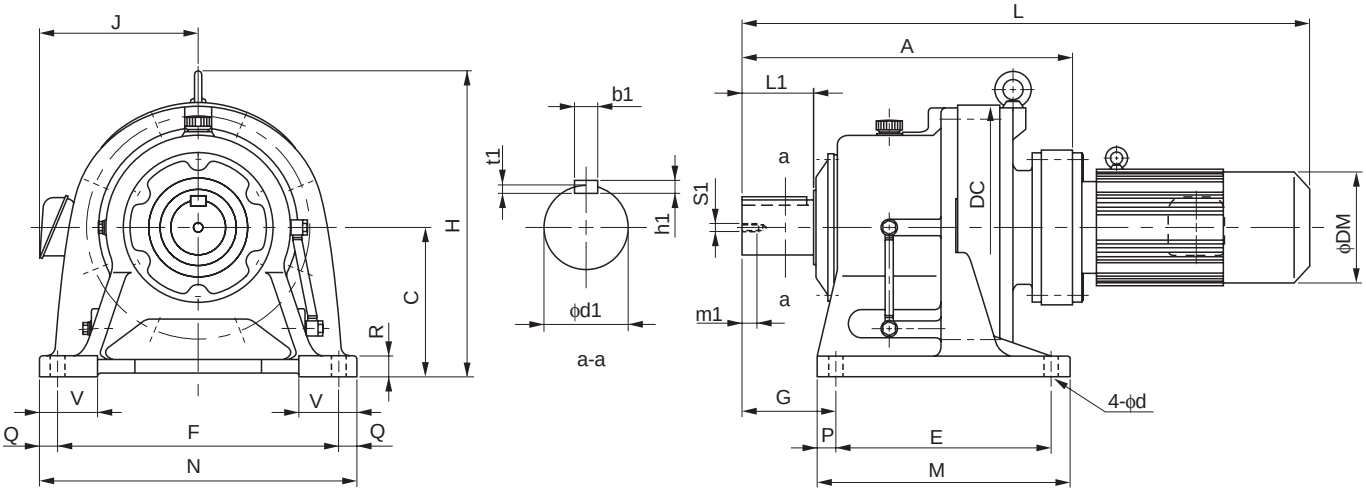

Frame size Note: 4	A	C	DC	E	F	G	M	N	P	Q	R	V	d	Output Shaft Note: 2, 3, 6						
														d1	L1	b1	h1	t1	S1	m1
619□DB	572	250	430	380	480	170	440	530	30	25	35	90	26	95	135	25	14	9	M20	34
6205DA	597	250	448	360	440	215	440	530	40	45	35	100	26	100	165	28	16	10	M20	34
6205DB	624	250	448	360	440	215	440	530	40	45	35	100	26	100	165	28	16	10	M20	34
6215DA	650	265	485	395	480	210	475	580	40	50	40	110	26	110	165	28	16	10	M20	34

Model Note: 4, 5	Motor		Standard					With Brake				
	[kW]	[P]	L	H	J	DM	W [kg]	L	H	J	DM	W [kg]
CHHM2 - 619□DB - (B) - Ratio	1.5	4	842	531	145	160	261	904	531	145	160	266
CHHM3 - 619□DB - (B) - Ratio	2.2	4	862	531	152	173	265	925	531	152	173	272
CHHM4 - 619□DB - (B) - Ratio	3.0	4	885	531	168	212	275	957	531	168	212	285
CHHM5 - 619□DB - (B) - Ratio	3.7	4	885	531	168	212	275	957	531	168	212	285
CHHM8 - 619□DB - (B) - Ratio	5.5	4	929	531	168	212	282	1001	531	168	212	292
CHHM10 - 619□DB - (B) - Ratio	7.5	4	952	531	213	251	297	1047	531	213	251	315
CHHM15 - 619□DB - (B) - Ratio	11	4	1012	531	213	251	311	1107	531	213	251	329
CHHM20 - 619□DB - (B) - Ratio	15	4	1102	531	261	324	363	1207	531	261	324	397
CHHM1 - 6205DA - (B) - Ratio	0.75	4	834	530	140	148	269	877	530	140	148	272
CHHM2 - 6205DA - (B) - Ratio	1.5	4	867	530	145	160	273	929	530	145	160	278
CHHM3 - 6205DA - (B) - Ratio	2.2	4	887	530	152	173	277	949	530	152	173	284
CHHM4 - 6205DA - (B) - Ratio	3.0	4	910	530	168	212	287	982	530	168	212	297
CHHM5 - 6205DA - (B) - Ratio	3.7	4	910	530	168	212	287	982	530	168	212	297
CHHM8 - 6205DA - (B) - Ratio	5.5	4	954	530	168	212	294	1026	530	168	212	304
CHHM3 - 6205DB - (B) - Ratio	2.2	4	914	530	152	173	289	977	530	152	173	296
CHHM4 - 6205DB - (B) - Ratio	3.0	4	937	530	168	212	299	1009	530	168	212	309
CHHM5 - 6205DB - (B) - Ratio	3.7	4	937	530	168	212	299	1009	530	168	212	309
CHHM8 - 6205DB - (B) - Ratio	5.5	4	981	530	168	212	306	1053	530	168	212	316
CHHM10 - 6205DB - (B) - Ratio	7.5	4	1004	530	213	251	321	1099	530	213	251	339
CHHM15 - 6205DB - (B) - Ratio	11	4	1064	530	213	251	334	1159	530	213	251	352
CHHM20 - 6205DB - (B) - Ratio	15	4	1154	530	261	324	386	1249	530	261	324	419
CHHM2 - 6215DA - (B) - Ratio	1.5	4	920	575	145	160	367	982	575	145	160	372
CHHM3 - 6215DA - (B) - Ratio	2.2	4	940	575	152	173	370	1003	575	152	173	377
CHHM4 - 6215DA - (B) - Ratio	3.0	4	963	575	168	212	380	1035	575	168	212	390
CHHM5 - 6215DA - (B) - Ratio	3.7	4	963	575	168	212	380	1035	575	168	212	390
CHHM8 - 6215DA - (B) - Ratio	5.5	4	1007	575	168	212	387	1079	575	168	212	397
CHHM10 - 6215DA - (B) - Ratio	7.5	4	1030	575	213	251	402	1125	575	213	251	420
CHHM15 - 6215DA - (B) - Ratio	11	4	1090	575	213	251	415	1185	575	213	251	433
CHHM20 - 6215DA - (B) - Ratio	15	4	1180	575	261	324	467	1285	575	261	324	501

Note: 1. □ indicates motor capacity.
2. Dimension of shaft end diameter: Dimension tolerance conforms to JIS B 0401-1976 "h6."
3. Dimension of shaft end key: Dimension tolerance conforms to JIS B 1301-1996 "Parallel Key."

Dimension Tables Gearmotors (Horizontal Direction, Foot-Mount)

CHHM□ - 6215DB to 6225DB

Note: 1

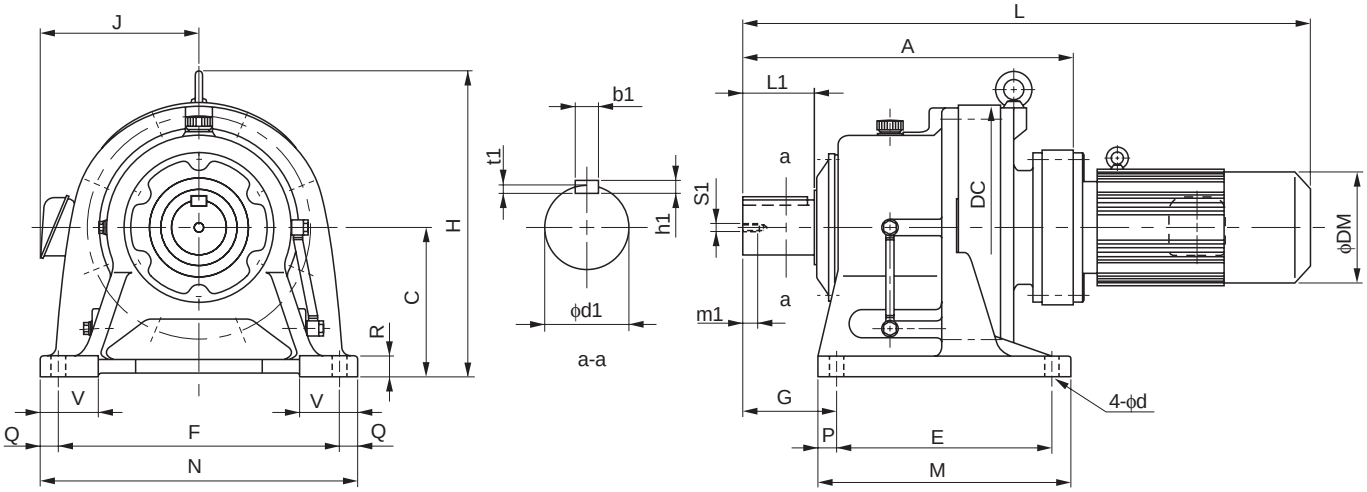

Frame size	A	C	DC	E	F	G	M	N	P	Q	R	V	d	Output Shaft Note: 2, 3, 6						
														d1	L1	b1	h1	t1	S1	m1
6215DB	675	265	485	395	480	210	475	580	40	50	40	110	26	110	165	28	16	10	M20	34
6225DA	692	280	526	420	540	230	520	620	50	40	40	115	33	120	165	32	18	11	M20	34
6225DB	735	280	526	420	540	230	520	620	50	40	40	115	33	120	165	32	18	11	M20	34

Model Note: 5	Motor		Standard					With Brake				
	[kW]	[P]	L	H	J	DM	W [kg]	L	H	J	DM	W [kg]
CHHM5 - 6215DB - (B) - Ratio	3.7	4	993	575	168	212	399	1065	575	168	212	409
CHHM8 - 6215DB - (B) - Ratio	5.5	4	1037	575	168	212	406	1109	575	168	212	416
CHHM10 - 6215DB - (B) - Ratio	7.5	4	1060	575	213	251	422	1155	575	213	251	439
CHHM15 - 6215DB - (B) - Ratio	11	4	1120	575	213	251	436	1215	575	213	251	453
CHHM20 - 6215DB - (B) - Ratio	15	4	1205	575	261	324	489	1310	575	261	324	523
CHHM25 - 6215DB - (B) - Ratio	18.5	4	1300	575	340	394	564	1465	575	340	394	615
CHHM30 - 6215DB - (B) - Ratio	22	4	1300	575	340	394	564	1465	575	340	394	615
CHHM2 - 6225DA - (B) - Ratio	1.5	4	962	610	145	160	441	1024	610	145	160	446
CHHM3 - 6225DA - (B) - Ratio	2.2	4	982	610	152	173	444	1045	610	152	173	451
CHHM4 - 6225DA - (B) - Ratio	3.0	4	1005	610	168	212	454	1077	610	168	212	464
CHHM5 - 6225DA - (B) - Ratio	3.7	4	1005	610	168	212	454	1077	610	168	212	464
CHHM8 - 6225DA - (B) - Ratio	5.5	4	1049	610	168	212	461	1121	610	168	212	471
CHHM10 - 6225DA - (B) - Ratio	7.5	4	1072	610	213	251	476	1167	610	213	251	494
CHHM15 - 6225DA - (B) - Ratio	11	4	1132	610	213	251	490	1227	610	213	251	508
CHHM20 - 6225DA - (B) - Ratio	15	4	1222	610	261	324	542	1327	610	261	324	576
CHHM5 - 6225DB - (B) - Ratio	3.7	4	1058	610	168	212	499	1130	610	168	212	510
CHHM8 - 6225DB - (B) - Ratio	5.5	4	1102	610	168	212	506	1174	610	168	212	517
CHHM10 - 6225DB - (B) - Ratio	7.5	4	1125	610	213	251	521	1220	610	213	251	539
CHHM15 - 6225DB - (B) - Ratio	11	4	1185	610	213	251	535	1280	610	213	251	553
CHHM20 - 6225DB - (B) - Ratio	15	4	1265	610	261	324	589	1370	610	261	324	623
CHHM25 - 6225DB - (B) - Ratio	18.5	4	1360	610	340	394	661	1525	610	340	394	712
CHHM30 - 6225DB - (B) - Ratio	22	4	1360	610	340	394	661	1525	610	340	394	712
CHHM40 - 6225DB - (B) - Ratio	30	4	1360	610	340	394	678	1525	610	340	394	729

Note: 4. □ indicates 0 or 5, expressing combination with reduction ratio. Refer to the Selection Table for details.
5. "B" after the frame size indicates models equipped with brake.
6. Dimension of shaft end: Refer to pages F-28 to F-29 for details.
7. Dimensions in above drawings are subject to change without notice.

Dimension Tables Gearmotors (Horizontal Direction, Foot-Mount)

CHHM□ - 6235DA to 6245DB

Note: 1

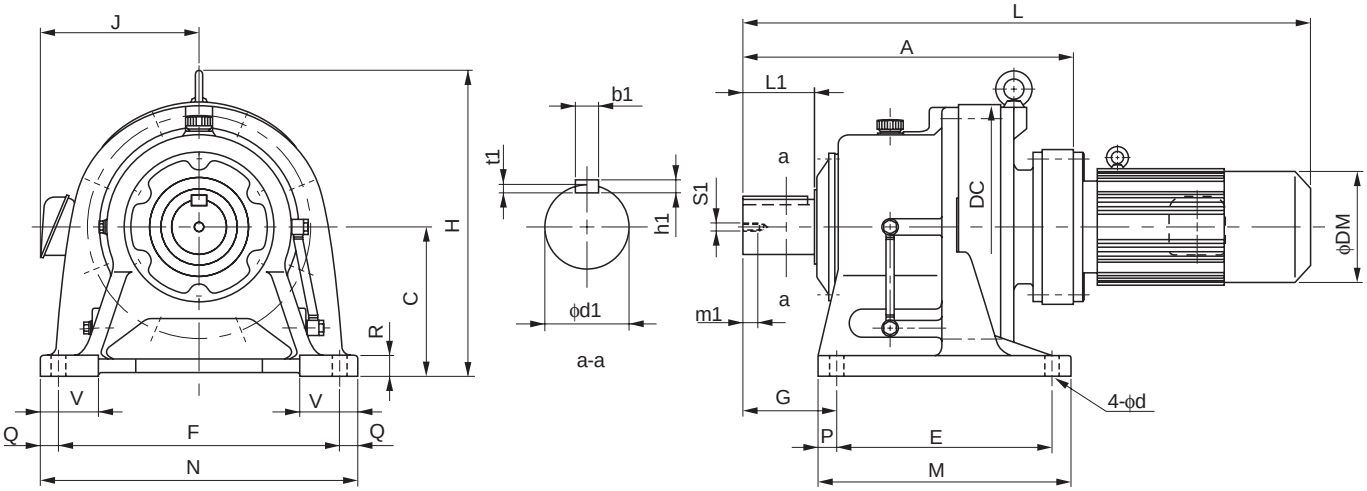

Frame size	A	C	DC	E	F	G	M	N	P	Q	R	V	d	Output Shaft Note: 2, 3, 5						
														d1	L1	b1	h1	t1	S1	m1
6235DA	778	300	562	460	580	260	560	670	50	45	45	120	33	130	200	32	18	11	M24	41
6235DB	800	300	562	460	580	260	560	670	50	45	45	120	33	130	200	32	18	11	M24	41
6245DA	816	335	614	480	630	263	580	720	50	45	45	128	39	140	200	36	20	12	M24	41
6245DB	837	335	614	480	630	263	580	720	50	45	45	128	39	140	200	36	20	12	M24	41

Model Note: 4	Motor		Standard					With Brake				
	[kW]	[P]	L	H	J	DM	W [kg]	L	H	J	DM	W [kg]
CHHM3 - 6235DA - (B) - Ratio	2.2	4	1068	667	152	173	561	1131	667	152	173	567
CHHM4 - 6235DA - (B) - Ratio	3.0	4	1091	667	168	212	570	1163	667	168	212	580
CHHM5 - 6235DA - (B) - Ratio	3.7	4	1091	667	168	212	570	1163	667	168	212	580
CHHM8 - 6235DA - (B) - Ratio	5.5	4	1135	667	168	212	577	1207	667	168	212	587
CHHM10 - 6235DA - (B) - Ratio	7.5	4	1163	667	213	251	593	1258	667	213	251	610
CHHM15 - 6235DA - (B) - Ratio	11	4	1223	667	213	251	607	1318	667	213	251	624
CHHM20 - 6235DA - (B) - Ratio	15	4	1308	667	261	324	660	1413	667	261	324	624
CHHM25 - 6235DA - (B) - Ratio	18.5	4	1403	667	340	394	737	1568	667	340	394	788
CHHM30 - 6235DA - (B) - Ratio	22	4	1403	667	340	394	737	1568	667	340	394	788
CHHM15 - 6235DB - (B) - Ratio	11	4	1245	667	213	251	639	1340	667	213	251	657
CHHM20 - 6235DB - (B) - Ratio	15	4	1330	667	261	324	701	1435	667	261	324	735
CHHM25 - 6235DB - (B) - Ratio	18.5	4	1425	667	340	394	768	1590	667	340	394	819
CHHM30 - 6235DB - (B) - Ratio	22	4	1425	667	340	394	768	1590	667	340	394	819
CHHM40 - 6235DB - (B) - Ratio	30	4	1425	667	340	394	782	1590	667	340	394	825
CHHM50 - 6235DB - (B) - Ratio	37	4	1540	667	340	394	820	1755	667	340	394	917
CHHM3 - 6245DA - (B) - Ratio	2.2	4	1106	729	152	173	670	1169	729	152	173	676
CHHM4 - 6245DA - (B) - Ratio	3.0	4	1129	729	168	212	679	1201	729	168	212	689
CHHM5 - 6245DA - (B) - Ratio	3.7	4	1129	729	168	212	679	1201	729	168	212	689
CHHM8 - 6245DA - (B) - Ratio	5.5	4	1173	729	168	212	686	1245	729	168	212	696
CHHM10 - 6245DA - (B) - Ratio	7.5	4	1201	729	213	251	702	1296	729	213	251	719
CHHM15 - 6245DA - (B) - Ratio	11	4	1261	729	213	251	716	1356	729	213	251	733
CHHM20 - 6245DA - (B) - Ratio	15	4	1346	729	261	324	769	1451	729	261	324	803
CHHM25 - 6245DA - (B) - Ratio	18.5	4	1441	729	340	394	840	1606	729	340	394	891
CHHM30 - 6245DA - (B) - Ratio	22	4	1441	729	340	394	840	1606	729	340	394	891
CHHM15 - 6245DB - (B) - Ratio	11	4	1282	729	213	251	740	1377	729	213	251	758
CHHM20 - 6245DB - (B) - Ratio	15	4	1367	729	261	324	800	1472	729	261	324	834
CHHM25 - 6245DB - (B) - Ratio	18.5	4	1462	729	340	394	866	1627	729	340	394	917
CHHM30 - 6245DB - (B) - Ratio	22	4	1462	729	340	394	866	1627	729	340	394	917
CHHM40 - 6245DB - (B) - Ratio	30	4	1462	729	340	394	883	1627	729	340	394	926
CHHM50 - 6245DB - (B) - Ratio	37	4	1577	729	340	394	935	1792	729	340	394	1032

Note: 1. □ indicates motor capacity.
2. Dimension of shaft end diameter: Dimension tolerance conforms to JIS B 0401-1976 "h6."
3. Dimension of shaft end key: Dimension tolerance conforms to JIS B 1301-1996 "Parallel Key."

Dimension Tables Gearmotors (Horizontal Direction, Foot-Mount)

CHHM□ - 6255DA to 6275DA

Note: 1

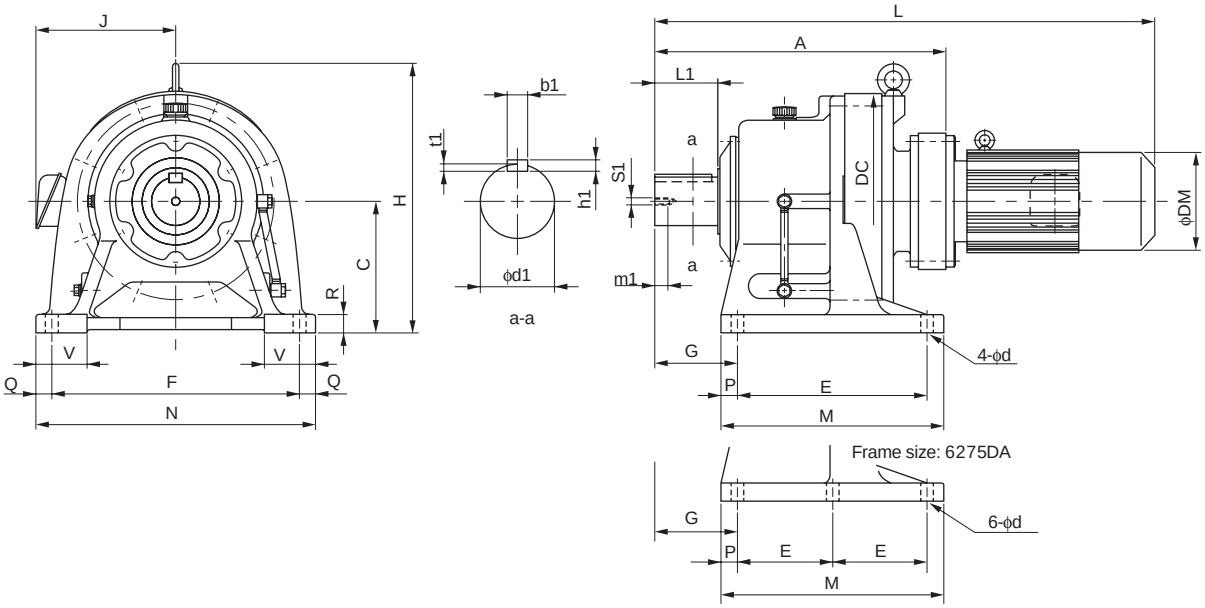

Frame size	A	C	DC	E	F	G	M	N	P	Q	R	V	d	Output Shaft Note: 2, 3, 5						
														d1	L1	b1	h1	t1	S1	m1
6255DA	956	375	670	520	670	320	630	780	55	55	50	140	39	160	240	40	22	13	M30	49
6255DB	978	375	670	520	670	320	630	780	55	55	50	140	39	160	240	40	22	13	M30	49
6265DA	1088	400	736	590	770	390	700	880	55	55	55	160	45	170	300	40	22	13	M30	49
6275DA	1349	540	950	420	1050	485	1040	1160	100	55	60	200	45	180	330	45	25	15	M30	52

Model Note: 4	Motor		Standard					With Brake				
	[kW]	[P]	L	H	J	DM	W [kg]	L	H	J	DM	W [kg]
CHHM5 - 6255DA - (B) - Ratio	3.7	4	1284	815	168	212	1031	1356	815	168	212	1041
CHHM8 - 6255DA - (B) - Ratio	5.5	4	1328	815	168	212	1041	1400	815	168	212	1051
CHHM10 - 6255DA - (B) - Ratio	7.5	4	1346	815	213	251	1056	1441	815	213	251	1071
CHHM15 - 6255DA - (B) - Ratio	11	4	1406	815	213	251	1071	1501	815	213	251	1086
CHHM20 - 6255DA - (B) - Ratio	15	4	1486	815	261	324	1121	1591	815	261	324	1157
CHHM25 - 6255DA - (B) - Ratio	18.5	4	1581	815	340	394	1195	1746	815	340	394	1246
CHHM30 - 6255DA - (B) - Ratio	22	4	1581	815	340	394	1195	1746	815	340	394	1246
CHHM40 - 6255DA - (B) - Ratio	30	4	1581	815	340	394	1215	1746	815	340	394	1258
CHHM15 - 6255DB - (B) - Ratio	11	4	1443	815	213	251	1144	1538	815	213	251	1159
CHHM20 - 6255DB - (B) - Ratio	15	4	1508	815	261	324	1194	1613	815	261	324	1228
CHHM25 - 6255DB - (B) - Ratio	18.5	4	1603	815	340	394	1270	1768	815	340	394	1321
CHHM30 - 6255DB - (B) - Ratio	22	4	1603	815	340	394	1270	1768	815	340	394	1321
CHHM40 - 6255DB - (B) - Ratio	30	4	1603	815	340	394	1285	1768	815	340	394	1328
CHHM50 - 6255DB - (B) - Ratio	37	4	1718	815	340	394	1323	1928	815	340	394	1420
CHHM60 - 6255DB - (B) - Ratio	45	4	1718	815	340	394	1323	1928	815	340	394	1420
CHHM8 - 6265DA - (B) - Ratio	5.5	4	1480	874	168	212	1366	1552	874	168	212	1376
CHHM10 - 6265DA - (B) - Ratio	7.5	4	1493	874	213	251	1381	1588	874	213	251	1401
CHHM15 - 6265DA - (B) - Ratio	11	4	1553	874	213	251	1396	1648	874	213	251	1411
CHHM20 - 6265DA - (B) - Ratio	15	4	1618	874	261	324	1446	1723	874	261	324	1482
CHHM25 - 6265DA - (B) - Ratio	18.5	4	1713	874	340	394	1525	1878	874	340	394	1570
CHHM30 - 6265DA - (B) - Ratio	22	4	1713	874	340	394	1525	1878	874	340	394	1570
CHHM40 - 6265DA - (B) - Ratio	30	4	1713	874	340	394	1540	1878	874	340	394	1583
CHHM50 - 6265DA - (B) - Ratio	37	4	1828	874	340	394	1575	2043	874	340	394	1672
CHHM60 - 6265DA - (B) - Ratio	45	4	1828	874	340	394	1575	2043	874	340	394	1672
CHHM10 - 6275DA - (B) - Ratio	7.5	4	1754	1161	213	251	2516	1849	1161	213	251	2536
CHHM15 - 6275DA - (B) - Ratio	11	4	1814	1161	213	251	2531	1909	1161	213	251	2546
CHHM20 - 6275DA - (B) - Ratio	15	4	1879	1161	261	324	2581	1984	1161	261	324	2617
CHHM25 - 6275DA - (B) - Ratio	18.5	4	1974	1161	340	394	2660	2139	1161	340	394	2705
CHHM30 - 6275DA - (B) - Ratio	22	4	1974	1161	340	394	2660	2139	1161	340	394	2705
CHHM40 - 6275DA - (B) - Ratio	30	4	1974	1161	340	394	2670	2139	1161	340	394	2718
CHHM50 - 6275DA - (B) - Ratio	37	4	2089	1161	340	394	2715	2304	1161	340	394	2810
CHHM60 - 6275DA - (B) - Ratio	45	4	2089	1161	340	394	2715	2304	1161	340	394	2810

Note: 4. "B" after the frame size indicates models equipped with brake.
5. Dimension of shaft end: Refer to pages F-28 to F-29 for details.
6. Dimensions in above drawings are subject to change without notice.

Dimension Tables Gearmotors (Universal Direction, Flange Mount)

CNFM□ - 606□ to 609□ (Note: 1)

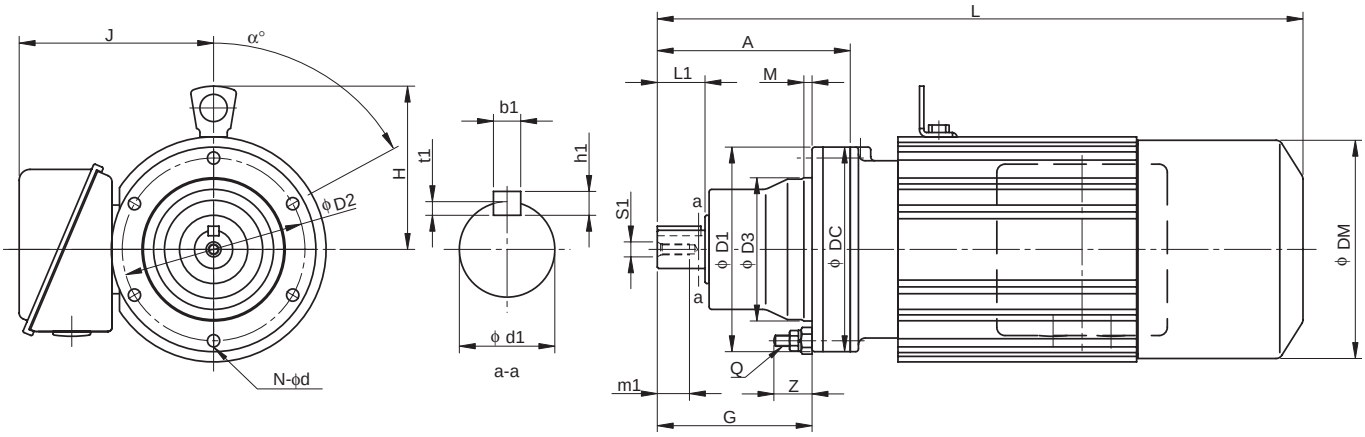

Frame size (Note: 5)	A	G	D1	D2	D3	DC	Q	Z	M	N	d	α°	Output Shaft (Note: 2, 3, 7) d1	L1	b1	h1	t1	S1	m1
606□	92	68	110	98	80	110	M6	21	4	6	6.6	60	14	25	5	5	3	M5	16
607□	98	74	110	98	80	110	M6	21	4	6	6.6	60	18	30	6	6	3.5	M6	16
608□	129	91	134	118	95	134	M8	27	5	8	9	22.5	22	35	6	6	3.5	M6	16
609□	142	114	150	134	105	150	M8	28	6	8	9	22.5	28	35	8	7	4	M8	20

Model (Note: 5, 6)	Motor [kW]	Motor [P]	Standard L	Standard H	Standard J	Standard DM	Standard W [kg]	With Brake L	With Brake H	With Brake J	With Brake DM	With Brake W [kg]
CNFM01 - 606□ - (B) - Ratio	0.1	4	254	-	130	119	6.5	261	-	130	124	8
CNFM02 - 606□ - (B) - Ratio	0.2	4	272	-	130	124	7.5	300	-	130	124	9
CNFM03 - 606□ - (B) - Ratio	0.25	4	272	-	130	124	7.5	300	-	130	124	9
CNFM01 - 607□ - (B) - Ratio	0.1	4	260	-	130	119	7.5	267	-	130	124	8.5
CNFM02 - 607□ - (B) - Ratio	0.2	4	278	-	130	124	8.5	306	-	130	124	9.5
CNFM03 - 607□ - (B) - Ratio	0.25	4	278	-	130	124	8.5	306	-	130	124	9.5
CNFM05 - 607□ - (B) - Ratio	0.4	4	294	-	130	124	9.5	326	-	130	124	10.5
CNFM01 - 608□ - (B) - Ratio	0.1	4	286	-	130	119	10	293	-	130	124	11
CNFM02 - 608□ - (B) - Ratio	0.2	4	304	-	130	124	11	332	-	130	124	12
CNFM03 - 608□ - (B) - Ratio	0.25	4	304	-	130	124	11	332	-	130	124	12
CNFM05 - 608□ - (B) - Ratio	0.4	4	320	-	130	124	13	352	-	130	124	14
CNFM08 - 608□ - (B) - Ratio	0.55	4	361	113	140	148	17	404	113	140	148	18
CNFM1 - 608□ - (B) - Ratio	0.75	4	361	113	140	148	17	404	113	140	148	18
CNFM01 - 609□ - (B) - Ratio	0.1	4	304	-	130	119	11	311	-	130	124	13
CNFM02 - 609□ - (B) - Ratio	0.2	4	322	-	130	124	12	350	-	130	124	14
CNFM03 - 609□ - (B) - Ratio	0.25	4	322	-	130	124	12	350	-	130	124	14
CNFM05 - 609□ - (B) - Ratio	0.4	4	338	-	130	124	13	370	-	130	124	15
CNFM08 - 609□ - (B) - Ratio	0.55	4	379	113	140	148	17	422	113	140	148	19
CNFM1 - 609□ - (B) - Ratio	0.75	4	379	113	140	148	17	422	113	140	148	19
CNFM1H - 609□ - (B) - Ratio	1.1	4	412	120	145	160	21	474	120	145	160	25
CNFM2 - 609□ - (B) - Ratio	1.5	4	412	120	145	160	21	474	120	145	160	25

Note: 1. □ indicates motor capacity.
2. Dimension of shaft end diameter: Dimension tolerance conforms to JIS B 0401-1976 "h6."
3. Dimension of shaft end key: Dimension tolerance conforms to JIS B 1301-1996 "Parallel Key."
4. Pilot diameter (φD3): Dimension tolerance conforms to JIS B 0401-1976 "g6."

Dimension Tables Gearmotors (Universal Direction, Flange Mount)

CNFM□- 610□ to 612□ (Note: 1)

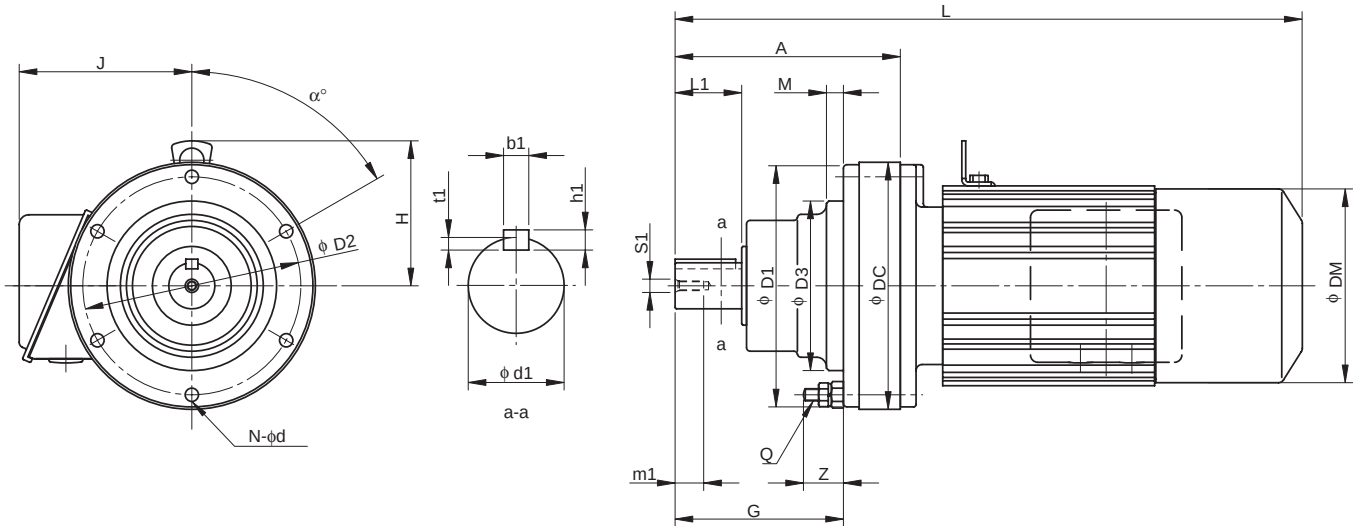

Frame size (Note: 5)	A	G	D1	D2	D3	DC	Q	Z	M	N	d	α°	Output Shaft (Note: 2, 3, 7) d1	L1	b1	h1	t1	S1	m1
610□	156	114	150	134	105	150	M8	28	6	8	9	22.5	28	35	8	7	4	M8	20
611□	170	118	162	146	115	162	M8	28	6	8	9	22.5	32	45	10	8	5	M8	20
612□	186	139	200	180	140	204	M10	33	14	6	11	60	38	55	10	8	5	M8	20

Model (Note: 5, 6)	Motor [kW]	Motor [P]	Standard L	Standard H	Standard J	Standard DM	Standard W [kg]	With Brake L	With Brake H	With Brake J	With Brake DM	With Brake W [kg]
CNFM02 - 610□ - (B) - Ratio	0.2	4	336	-	130	124	14	364	-	130	124	16
CNFM03 - 610□ - (B) - Ratio	0.25	4	336	-	130	124	14	364	-	130	124	16
CNFM05 - 610□ - (B) - Ratio	0.4	4	352	-	130	124	15	384	-	130	124	17
CNFM08 - 610□ - (B) - Ratio	0.55	4	393	113	140	148	19	436	113	140	148	22
CNFM1 - 610□ - (B) - Ratio	0.75	4	393	113	140	148	19	436	113	140	148	22
CNFM1H - 610□ - (B) - Ratio	1.1	4	426	120	145	160	23	488	120	145	160	28
CNFM2 - 610□ - (B) - Ratio	1.5	4	426	120	145	160	23	488	120	145	160	28
CNFM3 - 610□ - (B) - Ratio	2.2	4	446	126	152	173	27	509	126	152	173	33
CNFM05 - 611□ - (B) - Ratio	0.4	4	363	-	130	124	17	394	-	130	124	18
CNFM08 - 611□ - (B) - Ratio	0.55	4	403	113	140	148	20	452	113	140	148	23
CNFM1 - 611□ - (B) - Ratio	0.75	4	403	113	140	148	20	452	113	140	148	23
CNFM1H - 611□ - (B) - Ratio	1.1	4	436	120	145	160	23	493	120	145	160	28
CNFM2 - 611□ - (B) - Ratio	1.5	4	436	120	145	160	23	493	120	145	160	28
CNFM3 - 611□ - (B) - Ratio	2.2	4	456	126	152	173	27	519	126	152	173	33
CNFM4 - 611□ - (B) - Ratio	3.0	4	491	146	168	212	37	563	146	168	212	47
CNFM5 - 611□ - (B) - Ratio	3.7	4	491	146	168	212	37	563	146	168	212	47
CNFM05 - 612□ - (B) - Ratio	0.4	4	387	113	130	124	26	419	113	130	124	28
CNFM08 - 612□ - (B) - Ratio	0.55	4	423	113	140	148	28	466	113	140	148	31
CNFM1 - 612□ - (B) - Ratio	0.75	4	423	113	140	148	28	466	113	140	148	31
CNFM1H - 612□ - (B) - Ratio	1.1	4	456	120	145	160	32	518	120	145	160	37
CNFM2 - 612□ - (B) - Ratio	1.5	4	456	120	145	160	32	518	120	145	160	37
CNFM3 - 612□ - (B) - Ratio	2.2	4	476	126	152	173	36	539	126	152	173	43
CNFM4 - 612□ - (B) - Ratio	3.0	4	499	146	168	212	46	571	146	168	212	56
CNFM5 - 612□ - (B) - Ratio	3.7	4	499	146	168	212	46	571	146	168	212	56
CNFM8 - 612□ - (B) - Ratio	5.5	4	543	146	168	212	53	615	146	168	212	63

Note: 5. □ indicates 0 or 5, expressing combination with reduction ratio. Refer to the Selection Table for details.
6. "B" after the frame size indicates models equipped with brake.
7. Dimension of shaft end: Refer to pages F-28 to F-29 for details.
8. Dimensions in above drawings are subject to change without notice.

Dimension Tables Gearmotors (Horizontal Direction, Flange Mount)

CHFM□ - 613□ to 614□ (Note: 1)

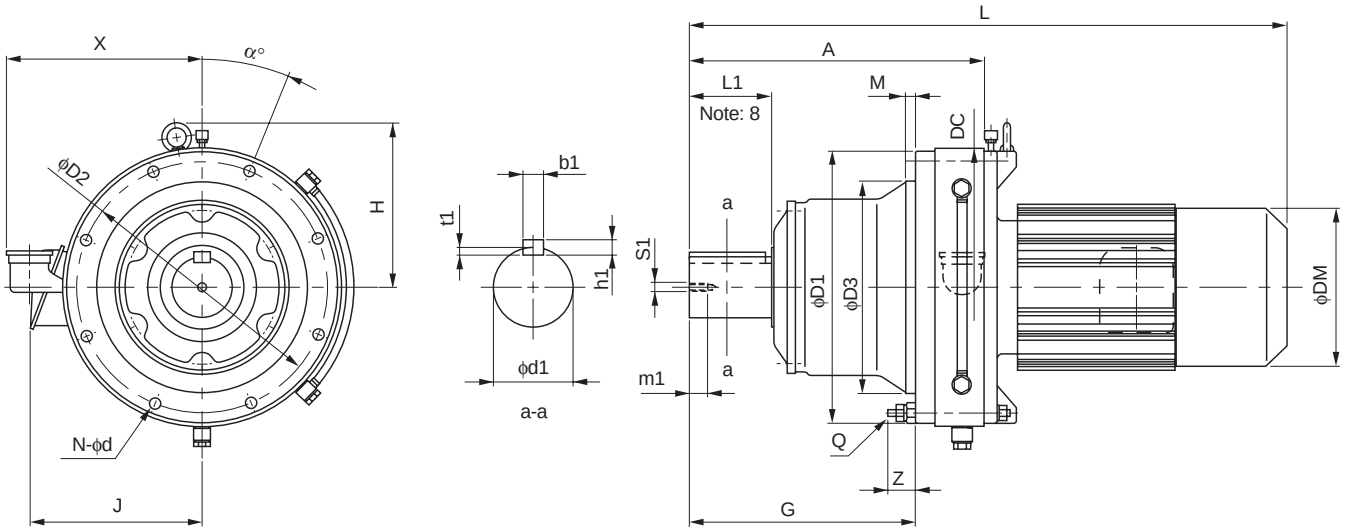

Frame size (Note: 5)	A	G	D1	D2	D3	DC	Q	Z	M	N	d	α°	X	Output Shaft (Note: 2, 3, 7) d1	L1	b1	h1	t1	S1	m1
613□	240	178	226	205	165	230	M10	31	16	6	11	60	208	50	70	14	9	5.5	M10	18
614□	260	198	226	205	165	230	M10	31	16	6	11	60	208	50	90	14	9	5.5	M10	18

Model (Note: 5, 6)	Motor [kW]	Motor [P]	Standard L	Standard H	Standard J	Standard DM	Standard W [kg]	With Brake L	With Brake H	With Brake J	With Brake DM	With Brake W [kg]
CHFM08 - 613□ - (B) - Ratio	0.55	4	477	111	140	148	44	520	111	140	148	46
CHFM1 - 613□ - (B) - Ratio	0.75	4	477	111	140	148	44	520	111	140	148	47
CHFM1H - 613□ - (B) - Ratio	1.1	4	510	118	145	160	48	572	118	145	160	53
CHFM2 - 613□ - (B) - Ratio	1.5	4	510	118	145	160	48	572	118	145	160	53
CHFM3 - 613□ - (B) - Ratio	2.2	4	530	124	152	173	51	593	124	152	173	58
CHFM4 - 613□ - (B) - Ratio	3.0	4	553	146	168	212	61	625	146	168	212	71
CHFM5 - 613□ - (B) - Ratio	3.7	4	553	146	168	212	61	625	146	168	212	71
CHFM8 - 613□ - (B) - Ratio	5.5	4	597	146	168	212	68	669	146	168	212	78
CHFM10 - 613□ - (B) - Ratio	7.5	4	620	173	213	251	83	715	173	213	251	101
CHFM15 - 613□ - (B) - Ratio	11	4	680	173	213	251	97	775	173	213	251	115
CHFM1 - 614□ - (B) - Ratio	0.75	4	497	118	140	148	45	540	118	140	148	48
CHFM1H - 614□ - (B) - Ratio	1.1	4	530	118	145	160	49	592	118	145	160	54
CHFM2 - 614□ - (B) - Ratio	1.5	4	530	118	145	160	49	592	118	145	160	54
CHFM3 - 614□ - (B) - Ratio	2.2	4	550	124	152	173	52	613	124	152	173	59
CHFM4 - 614□ - (B) - Ratio	3.0	4	573	146	168	212	62	645	146	168	212	72
CHFM5 - 614□ - (B) - Ratio	3.7	4	573	146	168	212	62	645	146	168	212	72
CHFM8 - 614□ - (B) - Ratio	5.5	4	617	146	168	212	69	689	146	168	212	79
CHFM10 - 614□ - (B) - Ratio	7.5	4	640	173	213	251	84	735	173	213	251	102
CHFM15 - 614□ - (B) - Ratio	11	4	700	173	213	251	98	795	173	213	251	116
CHFM20 - 614□ - (B) - Ratio	15	4	790	208	261	324	150	895	208	261	324	184

Note: 1. □ indicates motor capacity.
2. Dimension of shaft end diameter: Dimension tolerance conforms to JIS B 0401-1976 "h6."
3. Dimension of shaft end key: Dimension tolerance conforms to JIS B 1301-1996 "Parallel Key."
4. Pilot diameter (φD3): Dimension tolerance conforms to JIS B 0401-1976 "g6."

Dimension Tables Gearmotors (Horizontal Direction, Flange Mount)

CHFM□ - 616□ to 617□ (Note: 1)

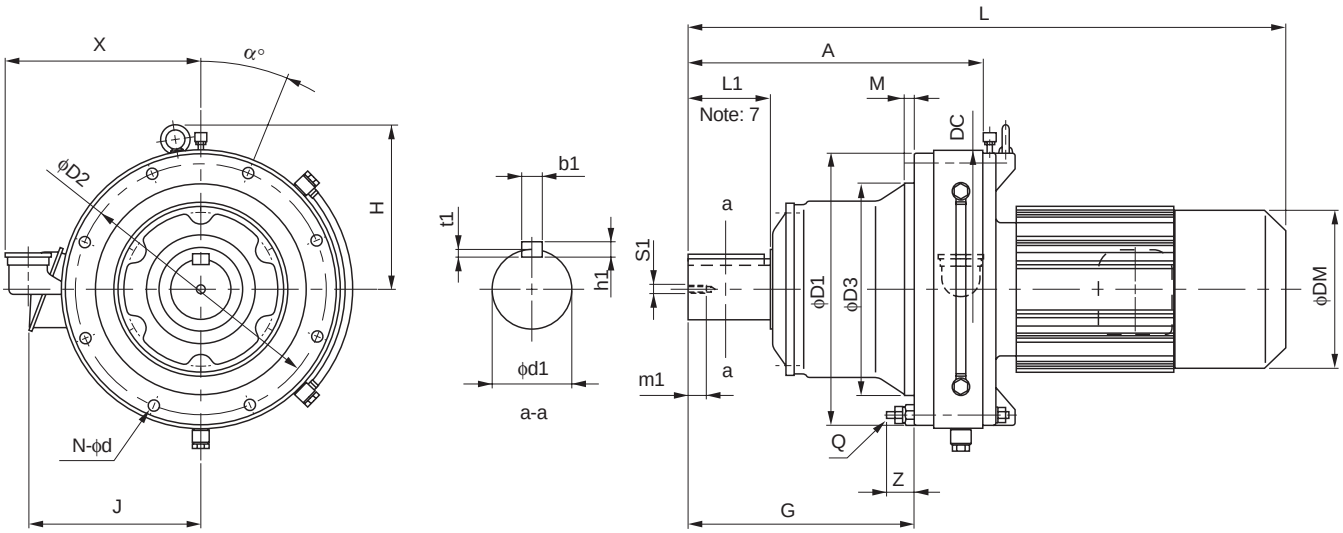

Frame size (Note: 5)	A	G	D1	D2	D3	DC	Q	Z	M	N	d	α°	X	Output Shaft (Note: 2, 3, 7) d1	L1	b1	h1	t1	S1	m1
616□	308	222	296	270	200	300	M12	35	10	6	14	30	228	60	90	18	11	7	M10	18
617□	352	262	330	300	250	340	M12	41	12	8	14	22.5	243	70	90	20	12	7.5	M12	24

Model (Note: 5, 6)	Motor [kW]	Motor [P]	Standard L	Standard H	Standard J	Standard DM	Standard W [kg]	With Brake L	With Brake H	With Brake J	With Brake DM	With Brake W [kg]
CHFM1H - 616□ - (B) - Ratio	1.1	4	583	118	145	160	76	645	118	145	160	81
CHFM2 - 616□ - (B) - Ratio	1.5	4	583	118	145	160	76	645	118	145	160	81
CHFM3 - 616□ - (B) - Ratio	2.2	4	598	124	152	173	79	661	124	152	173	85
CHFM4 - 616□ - (B) - Ratio	3.0	4	621	146	168	212	88	693	146	168	212	98
CHFM5 - 616□ - (B) - Ratio	3.7	4	621	146	168	212	88	693	146	168	212	98
CHFM8 - 616□ - (B) - Ratio	5.5	4	665	146	168	212	95	737	146	168	212	105
CHFM10 - 616□ - (B) - Ratio	7.5	4	693	173	213	251	111	788	173	213	251	128
CHFM15 - 616□ - (B) - Ratio	11	4	753	173	213	251	125	848	173	213	251	142
CHFM20 - 616□ - (B) - Ratio	15	4	838	208	261	324	178	943	208	261	324	212
CHFM25 - 616□ - (B) - Ratio	18.5	4	933	208	340	394	254	1098	208	340	394	305
CHFM30 - 616□ - (B) - Ratio	22	4	933	208	340	394	254	1098	208	340	394	305
CHFM4 - 617□ - (B) - Ratio	3.0	4	680	203	168	212	119	752	203	168	212	129
CHFM5 - 617□ - (B) - Ratio	3.7	4	680	203	168	212	119	752	203	168	212	129
CHFM8 - 617□ - (B) - Ratio	5.5	4	724	203	168	212	126	796	203	168	212	136
CHFM10 - 617□ - (B) - Ratio	7.5	4	742	203	213	251	141	837	203	213	251	159
CHFM15 - 617□ - (B) - Ratio	11	4	802	203	213	251	155	897	203	213	251	173
CHFM20 - 617□ - (B) - Ratio	15	4	882	213	261	324	209	987	213	261	324	243
CHFM25 - 617□ - (B) - Ratio	18.5	4	977	227	340	394	281	1142	227	340	394	332
CHFM30 - 617□ - (B) - Ratio	22	4	977	227	340	394	281	1142	227	340	394	332
CHFM40 - 617□ - (B) - Ratio	30	4	977	228	340	394	298	1142	228	340	394	341

Note: 5. □ indicates 0 or 5, expressing combination with reduction ratio. Refer to the Selection Table for details.
6. "B" after the frame size indicates models equipped with brake.
7. Dimension of shaft end: Refer to pages F-28 to F-29 for details.
8. Dimensions in above drawings are subject to change without notice.

Dimension Tables Gearmotors (Horizontal Direction, Flange Mount)

CHFM□ - 618□ to 619□ (Note: 1)

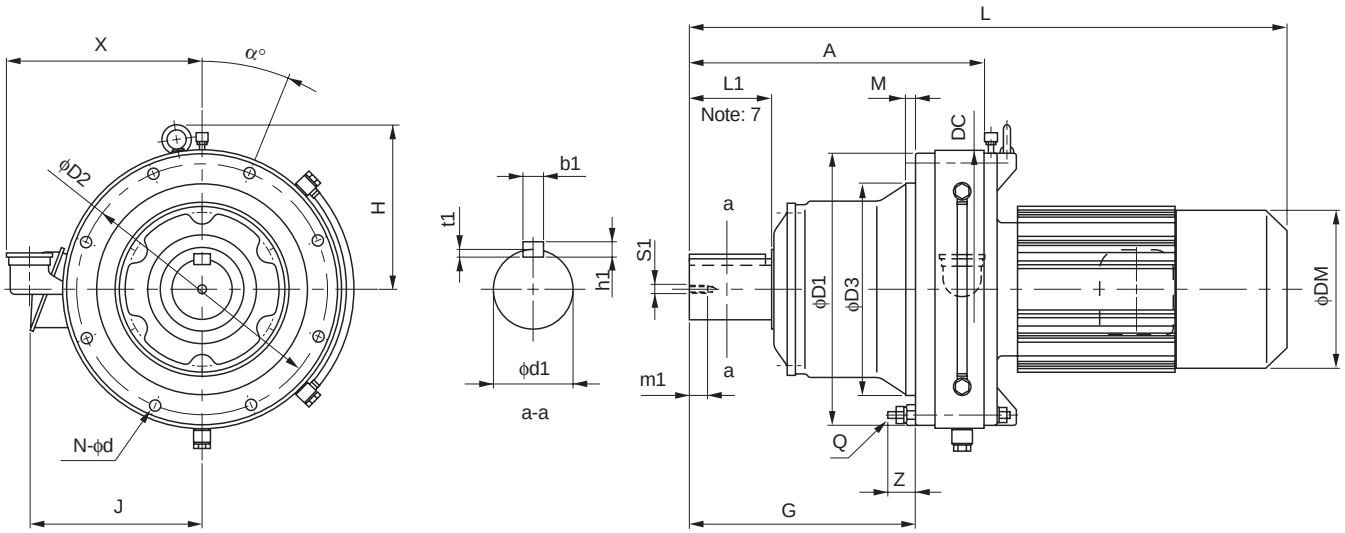

Frame size (Note: 5)	A	G	D1	D2	D3	DC	Q	Z	M	N	d	α°	X	Output Shaft (Note: 2, 3, 7) d1	L1	b1	h1	t1	S1	m1
618□	389	299	360	330	280	370	M12	38	12	8	14	22.5	258	80	110	22	14	9	M12	24
619□	465	365	420	380	320	430	M12	41	10	12	14	15	285	95	135	25	14	9	M20	34

Model (Note: 5, 6)	Motor [kW]	Motor [P]	Standard L	Standard H	Standard J	Standard DM	Standard W [kg]	With Brake L	With Brake H	With Brake J	With Brake DM	With Brake W [kg]
CHFM4 - 618□ - (B) - Ratio	3.0	4	717	218	168	212	149	789	218	168	212	159
CHFM5 - 618□ - (B) - Ratio	3.7	4	717	218	168	212	149	789	218	168	212	159
CHFM8 - 618□ - (B) - Ratio	5.5	4	761	218	168	212	157	833	218	168	212	167
CHFM10 - 618□ - (B) - Ratio	7.5	4	779	218	213	251	172	874	218	213	251	190
CHFM15 - 618□ - (B) - Ratio	11	4	839	218	213	251	186	934	218	213	251	204
CHFM20 - 618□ - (B) - Ratio	15	4	919	217	261	324	246	1024	217	261	324	275
CHFM25 - 618□ - (B) - Ratio	18.5	4	1014	227	340	394	312	1179	227	340	394	363
CHFM30 - 618□ - (B) - Ratio	22	4	1014	227	340	394	312	1179	227	340	394	363
CHFM40 - 618□ - (B) - Ratio	30	4	1014	228	340	394	329	1179	228	340	394	372
CHFM50 - 618□ - (B) - Ratio	37	4	1129	228	340	394	377	1344	228	340	394	474
CHFM60 - 618□ - (B) - Ratio	45	4	1129	228	340	394	377	1344	228	340	394	474
CHFM8 - 619□ - (B) - Ratio	5.5	4	857	261	168	212	217	929	261	168	212	227
CHFM10 - 619□ - (B) - Ratio	7.5	4	870	261	213	251	230	965	261	213	251	248
CHFM15 - 619□ - (B) - Ratio	11	4	930	261	213	251	244	1025	261	213	251	262
CHFM20 - 619□ - (B) - Ratio	15	4	995	217	261	324	297	1100	217	261	324	332
CHFM25 - 619□ - (B) - Ratio	18.5	4	1090	227	340	394	373	1255	227	340	394	418
CHFM256 - 619□ - (B) - Ratio	18.5	6	1090	227	340	394	388	1255	227	340	394	431
CHFM30 - 619□ - (B) - Ratio	22	4	1090	227	340	394	373	1255	227	340	394	418
CHFM40 - 619□ - (B) - Ratio	30	4	1090	261	340	394	388	1255	261	340	394	431
CHFM406 - 619□ - (B) - Ratio	30	6	1205	261	340	394	426	1420	261	340	394	523
CHFM50 - 619□ - (B) - Ratio	37	4	1205	261	340	394	426	1420	261	340	394	523
CHFM506 - 619□ - (B) - Ratio	37	6	1205	261	340	394	426	1420	261	340	394	523
CHFM60 - 619□ - (B) - Ratio	45	4	1205	261	340	394	426	1420	261	340	394	523

Note: 1. ⬚ indicates motor capacity.
2. Dimension of shaft end diameter: Dimension tolerance conforms to JIS B 0401-1976 "h6."
3. Dimension of shaft end key: Dimension tolerance conforms to JIS B 1301-1996 "Parallel Key."
4. Pilot diameter (φD3): Dimension tolerance conforms to JIS B 0401-1976 "g6."

Dimension Tables Gearmotors (Horizontal Direction, Flange Mount)

CHFM□ - 6205 to 6215 (Note: 1)

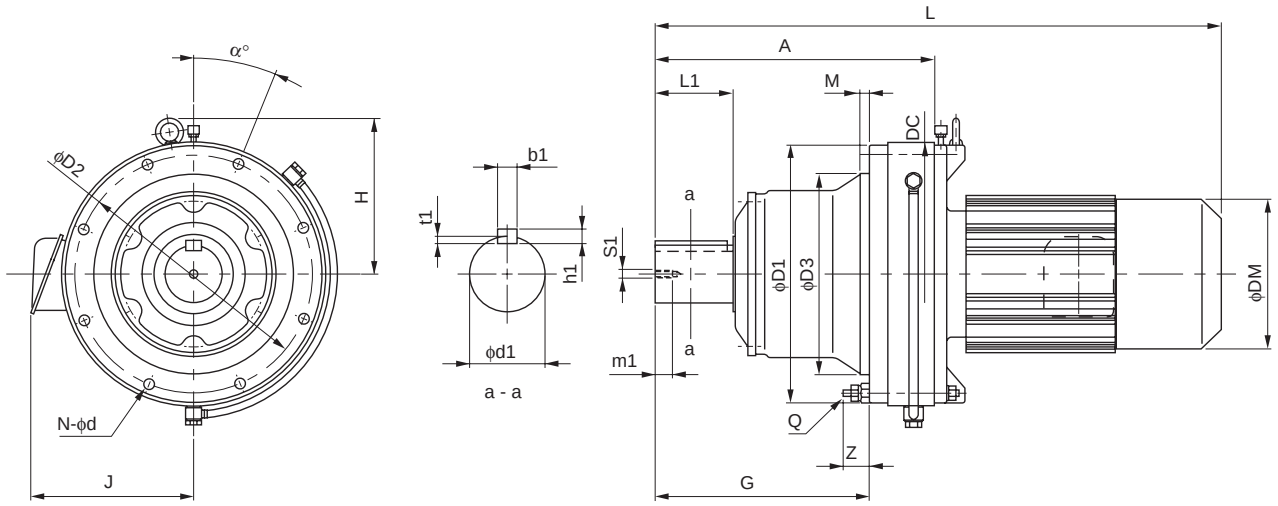

Frame size	A	G	D1	D2	D3	DC	Q	Z	M	N	d	α°	Output Shaft (Note: 2, 3, 7) d1	L1	b1	h1	t1	S1	m1
6205	502	410	443	405	360	448	M16	57	20	12	18	15	100	165	28	16	10	M20	34
6215	526	423	480	440	390	485	M18	57	20	12	20.5	15	110	165	28	16	10	M20	34

Model (Note: 6)	Motor [kW]	Motor [P]	Standard L	Standard H	Standard J	Standard DM	Standard W [kg]	With Brake L	With Brake H	With Brake J	With Brake DM	With Brake W [kg]
CHFM15 - 6205 - (B) - Ratio	11	4	972	283	213	251	270	1067	283	213	251	288
CHFM20 - 6205 - (B) - Ratio	15	4	1042	283	261	324	324	1147	283	261	324	360
CHFM206 - 6205 - (B) - Ratio	15	6	1127	283	340	394	399	1292	283	340	394	444
CHFM25 - 6205 - (B) - Ratio	18.5	4	1127	283	340	394	399	1292	283	340	394	444
CHFM30 - 6205 - (B) - Ratio	22	4	1127	283	340	394	399	1292	283	340	394	444
CHFM306 - 6205 - (B) - Ratio	22	6	1127	283	340	394	412	1292	283	340	394	457
CHFM40 - 6205 - (B) - Ratio	30	4	1127	283	340	394	412	1292	283	340	394	457
CHFM406 - 6205 - (B) - Ratio	30	6	1242	283	340	394	450	1457	283	340	394	544
CHFM50 - 6205 - (B) - Ratio	37	4	1242	283	340	394	450	1457	283	340	394	544
CHFM506 - 6205 - (B) - Ratio	37	6	1242	283	340	394	450	1457	283	340	394	544
CHFM60 - 6205 - (B) - Ratio	45	4	1242	283	340	394	450	1457	283	340	394	544
CHFM606 - 6205 - (B) - Ratio	45	6	1297	283	390	484	543	-	283	-	-	-
CHFM75 - 6205 - (B) - Ratio	55	4	1297	283	390	484	543	-	283	-	-	-
CHFM15 - 6215 - (B) - Ratio	11	4	996	312	213	251	350	1091	312	213	251	368
CHFM20 - 6215 - (B) - Ratio	15	4	1066	312	261	324	405	1171	312	261	324	440
CHFM206 - 6215 - (B) - Ratio	15	6	1151	312	340	394	474	1316	312	340	394	519
CHFM25 - 6215 - (B) - Ratio	18.5	4	1151	312	340	394	474	1316	312	340	394	519
CHFM256 - 6215 - (B) - Ratio	18.5	6	1151	312	340	394	487	1316	312	340	394	532
CHFM30 - 6215 - (B) - Ratio	22	4	1151	312	340	394	474	1316	312	340	394	519
CHFM306 - 6215 - (B) - Ratio	22	6	1151	312	340	394	487	1316	312	340	394	532
CHFM40 - 6215 - (B) - Ratio	30	4	1151	312	340	394	487	1316	312	340	394	532
CHFM406 - 6215 - (B) - Ratio	30	6	1266	312	340	394	525	1481	312	340	394	620
CHFM50 - 6215 - (B) - Ratio	37	4	1266	312	340	394	525	1481	312	340	394	620
CHFM506 - 6215 - (B) - Ratio	37	6	1266	312	340	394	525	1481	312	340	394	620
CHFM60 - 6215 - (B) - Ratio	45	4	1266	312	340	394	525	1481	312	340	394	620
CHFM606 - 6215 - (B) - Ratio	45	6	1321	312	390	484	635	-	312	-	-	-
CHFM75 - 6215 - (B) - Ratio	55	4	1321	312	390	484	635	-	312	-	-	-

Note: 5. □ indicates 0 or 5, expressing combination with reduction ratio. Refer to the Selection Table for details.
6. "B" after the frame size indicates models equipped with brake.
7. Dimension of shaft end: Refer to pages F-28 to F-29 for details.
8. Dimensions in above drawings are subject to change without notice.

Dimension Tables Gearmotors (Horizontal Direction, Flange Mount)

CHFM□ - 6225 to 6235 (Note: 1)

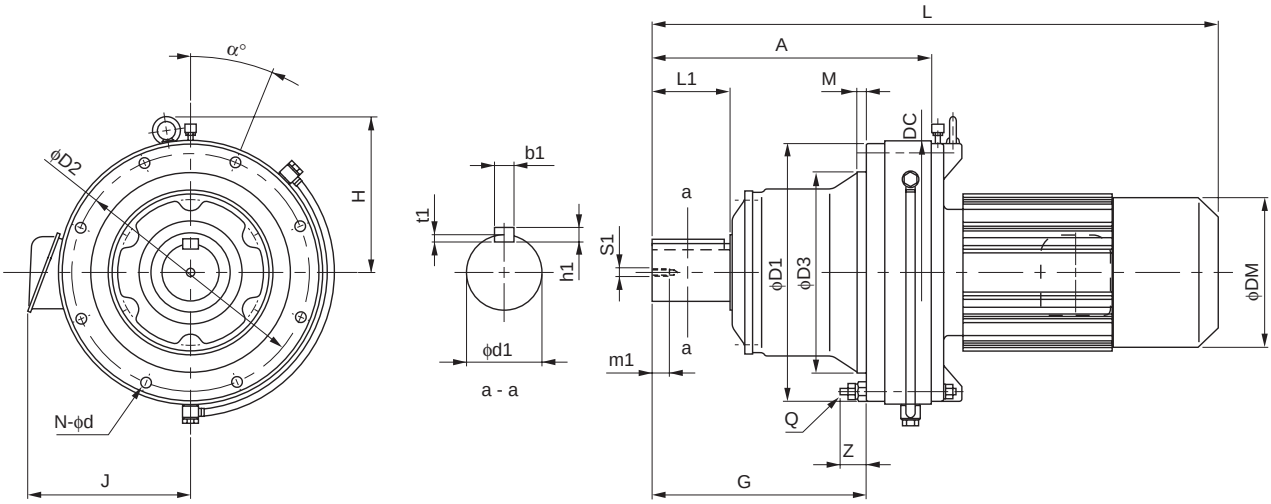

Frame size	A	G	D1	D2	D3	DC	Q	Z	M	N	d	α°	Output Shaft (Note: 2, 3, 6) d1	L1	b1	h1	t1	S1	m1
6225	566	454	521	475	420	526	M20	60	20	12	22	15	120	165	32	18	11	M20	34
6235	628	505	557	510	455	562	M20	63	20	12	22	15	130	200	32	18	11	M24	41

Model (Note: 5)	Motor [kW]	Motor [P]	Standard L	Standard H	Standard J	Standard DM	Standard W [kg]	With Brake L	With Brake H	With Brake J	With Brake DM	With Brake W [kg]
CHFM206 - 6225 - (B) - Ratio	15	6	1191	333	340	394	542	1356	333	340	394	587
CHFM25 - 6225 - (B) - Ratio	18.5	4	1191	333	340	394	542	1356	333	340	394	587
CHFM256 - 6225 - (B) - Ratio	18.5	6	1191	333	340	394	555	1356	333	340	394	600
CHFM30 - 6225 - (B) - Ratio	22	4	1191	333	340	394	542	1356	333	340	394	587
CHFM306 - 6225 - (B) - Ratio	22	6	1191	333	340	394	555	1356	333	340	394	600
CHFM40 - 6225 - (B) - Ratio	30	4	1191	333	340	394	555	1356	333	340	394	600
CHFM406 - 6225 - (B) - Ratio	30	6	1306	333	340	394	593	1521	333	340	394	688
CHFM50 - 6225 - (B) - Ratio	37	4	1306	333	340	394	593	1521	333	340	394	688
CHFM506 - 6225 - (B) - Ratio	37	6	1306	333	340	394	593	1521	333	340	394	688
CHFM60 - 6225 - (B) - Ratio	45	4	1306	333	340	394	593	1521	333	340	394	688
CHFM606 - 6225 - (B) - Ratio	45	6	1361	333	390	484	692	-	-	-	-	-
CHFM75 - 6225 - (B) - Ratio	55	4	1361	333	390	484	692	-	-	-	-	-
CHFM206 - 6235 - (B) - Ratio	15	6	1253	351	340	394	627	1463	351	340	394	658
CHFM256 - 6235 - (B) - Ratio	18.5	6	1253	351	340	394	627	1463	351	340	394	672
CHFM306 - 6235 - (B) - Ratio	22	6	1253	351	340	394	627	1463	351	340	394	672
CHFM406 - 6235 - (B) - Ratio	30	6	1368	351	340	394	673	1583	351	340	394	761
CHFM506 - 6235 - (B) - Ratio	37	6	1368	351	340	394	673	1583	351	340	394	761
CHFM606 - 6235 - (B) - Ratio	45	6	1423	351	390	484	762	-	-	-	-	-
CHFM756 - 6235 - (B) - Ratio	55	6	1503	351	390	485	816	-	-	-	-	-

Note: 1. □ indicates motor capacity.
2. Dimension of shaft end diameter: Dimension tolerance conforms to JIS B 0401-1976 "h6."
3. Dimension of shaft end key: Dimension tolerance conforms to JIS B 1301-1996 "Parallel Key."
4. Pilot diameter (φD3): Dimension tolerance conforms to JIS B 0401-1976 "g6."

Dimension Tables Gearmotors (Horizontal Direction, Flange Mount)

CHFM□ - 6245 to 6265 (Note: 1)

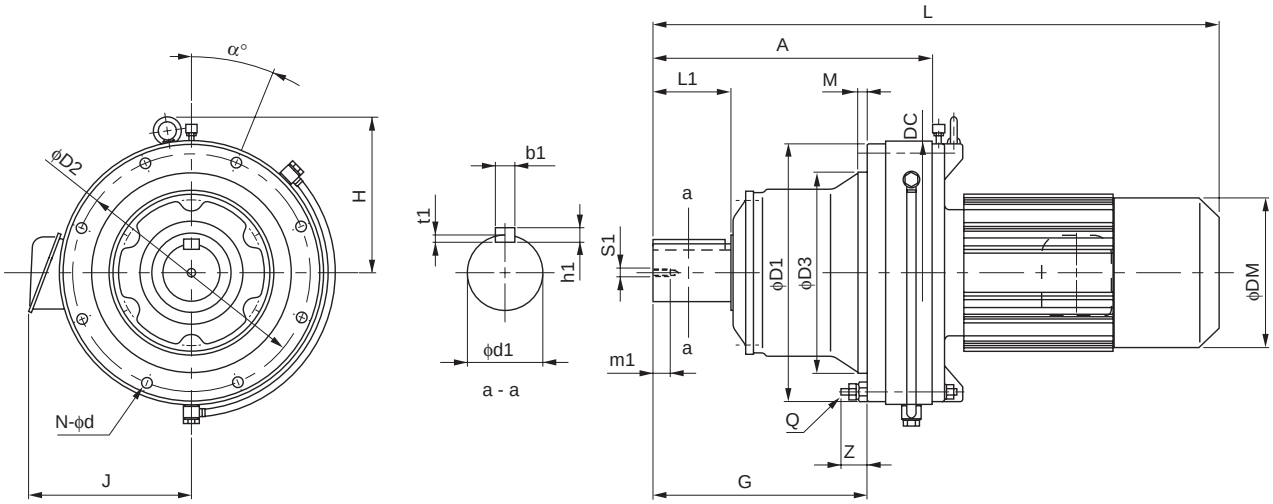

Frame size	A	G	D1	D2	D3	DC	Q	Z	M	N	d	α°	Output Shaft (Note: 2, 3, 6) d1	L1	b1	h1	t1	S1	m1
6245	657	529	615	560	500	614	M24	65	25	12	27	15	140	200	36	20	12	M24	41
6255	775	616	666	610	540	670	M24	86	30	12	27	15	160	240	40	22	13	M30	49
6265	892	712	730	660	570	736	M30	82	40	12	34	15	170	300	40	22	13	M30	49

Model (Note: 5)	Motor [kW]	Motor [P]	Standard L	Standard H	Standard J	Standard DM	Standard W [kg]	With Brake L	With Brake H	With Brake J	With Brake DM	With Brake W [kg]
CHFM206 - 6245 - (B) - Ratio	15	6	1282	359	340	394	747	1447	359	340	394	780
CHFM256 - 6245 - (B) - Ratio	18.5	6	1282	359	340	394	747	1447	359	340	394	794
CHFM306 - 6245 - (B) - Ratio	22	6	1282	359	340	394	747	1447	359	340	394	794
CHFM406 - 6245 - (B) - Ratio	30	6	1397	359	340	394	793	1612	359	340	394	881
CHFM506 - 6245 - (B) - Ratio	37	6	1397	359	340	394	793	1612	359	340	394	881
CHFM606 - 6245 - (B) - Ratio	45	6	1452	359	390	484	884	-	359	-	-	-
CHFM756 - 6245 - (B) - Ratio	55	6	1532	359	390	485	933	-	359	-	-	-
CHFM256 - 6255 - (B) - Ratio	18.5	6	1400	386	340	394	992	1565	386	340	394	1039
CHFM306 - 6255 - (B) - Ratio	22	6	1400	386	340	394	992	1565	386	340	394	1039
CHFM406 - 6255 - (B) - Ratio	30	6	1515	386	340	394	1037	1730	386	340	394	1125
CHFM506 - 6255 - (B) - Ratio	37	6	1515	386	340	394	1037	1730	386	340	394	1125
CHFM606 - 6255 - (B) - Ratio	45	6	1570	386	390	484	1117	-	-	-	-	-
CHFM756 - 6255 - (B) - Ratio	55	6	1650	386	390	485	1172	-	-	-	-	-
CHFM306 - 6265 - (B) - Ratio	22	6	1517	453	340	394	1230	1727	453	340	394	1277
CHFM406 - 6265 - (B) - Ratio	30	6	1632	453	340	394	1275	1847	453	340	394	1363
CHFM506 - 6265 - (B) - Ratio	37	6	1632	453	340	394	1275	1847	453	340	394	1363
CHFM606 - 6265 - (B) - Ratio	45	6	1687	453	390	484	1370	-	-	-	-	-

Note: 5. "B" after the frame size indicates models equipped with brake.
6. Dimension of shaft end: Refer to pages F-28 to F-29 for details.
7. Dimensions in above drawings are subject to change without notice.

Dimension Tables Gearmotors (Universal Direction, Flange Mount)

CNFM□ Note: 1 - 606□DA to 612□DB

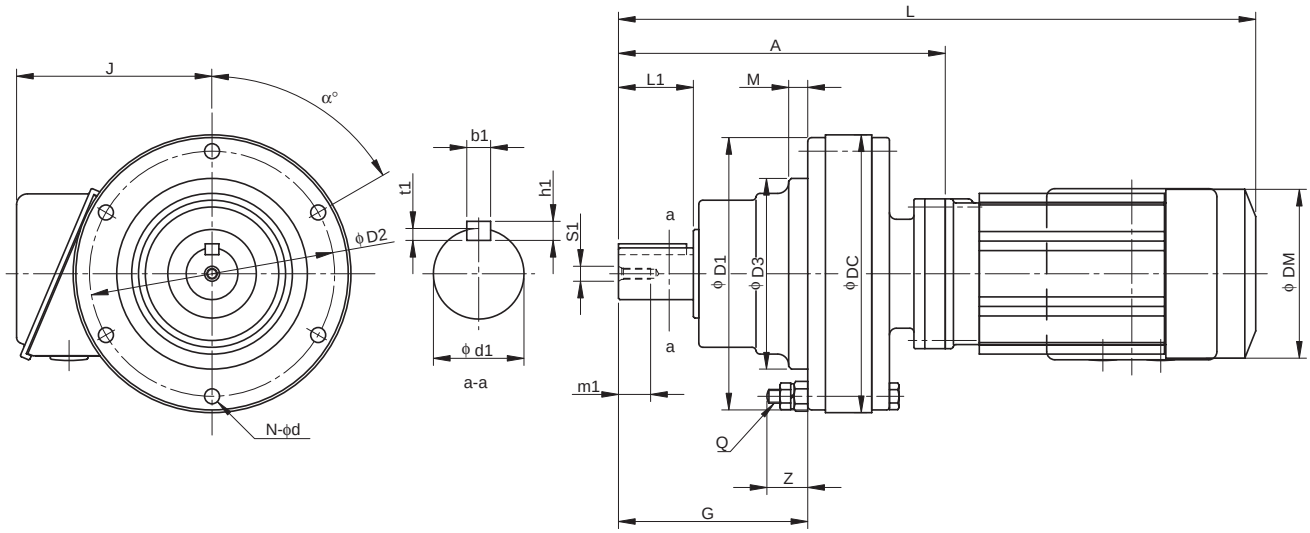

Frame size Note: 5	A	G	D1	D2	D3	DC	Q	Z	M	N	d	α°	Output Shaft Note: 2, 3, 7						
													d1	L1	b1	h1	t1	S1	m1
606□DA	125	68	110	98	80	110	M6	23	4	6	6.6	60	14	25	5	5	3	M5	16
607□DA	131	74	110	98	80	110	M6	23	4	6	6.6	60	18	30	6	6	3.5	M6	16
609□DA	190	114	150	134	105	150	M8	28	6	8	9	22.5	28	35	8	7	4	M8	20
610□DA	204	114	150	134	105	150	M8	28	6	8	9	22.5	28	35	8	7	4	M8	20
612□DA	240	139	200	180	140	204	M10	33	14	6	11	60	38	55	10	8	5	M8	20
612□DB	252	139	200	180	140	204	M10	33	14	6	11	60	38	55	10	8	5	M8	20

Model Note: 5, 6	Motor		Standard				With Brake			
	[kW]	[P]	L	J	DM	W [kg]	L	J	DM	W [kg]
CNFM01 - 606□DA - (B) - Ratio	0.1	4	287	130	119	8	294	130	124	9.5
CNFM01 - 607□DA - (B) - Ratio	0.1	4	293	130	119	9	300	130	124	10.5
CNFM02 - 607□DA - (B) - Ratio	0.2	4	311	130	124	10	339	130	124	12
CNFM01 - 609□DA - (B) - Ratio	0.1	4	352	130	119	14	359	130	124	15
CNFM02 - 609□DA - (B) - Ratio	0.2	4	370	130	124	15	398	130	124	16
CNFM03 - 609□DA - (B) - Ratio	0.25	4	370	130	124	15	398	130	124	16
CNFM05 - 609□DA - (B) - Ratio	0.4	4	386	130	124	16	418	130	124	17
CNFM01 - 610□DA - (B) - Ratio	0.1	4	366	130	119	15	373	130	124	16
CNFM02 - 610□DA - (B) - Ratio	0.2	4	384	130	124	16	412	130	124	17
CNFM03 - 610□DA - (B) - Ratio	0.25	4	384	130	124	16	412	130	124	17
CNFM05 - 610□DA - (B) - Ratio	0.4	4	400	130	124	17	432	130	124	18
CNFM01 - 612□DA - (B) - Ratio	0.1	4	402	130	119	26	409	130	124	27
CNFM02 - 612□DA - (B) - Ratio	0.2	4	420	130	124	27	448	130	124	28
CNFM03 - 612□DA - (B) - Ratio	0.25	4	420	130	124	27	448	130	124	28
CNFM05 - 612□DA - (B) - Ratio	0.4	4	436	130	124	28	468	130	124	29
CNFM01 - 612□DB - (B) - Ratio	0.1	4	414	130	119	29	421	130	124	31
CNFM02 - 612□DB - (B) - Ratio	0.2	4	432	130	124	30	473	130	124	32
CNFM03 - 612□DB - (B) - Ratio	0.25	4	432	130	124	30	473	130	124	32
CNFM05 - 612□DB - (B) - Ratio	0.4	4	448	130	124	31	473	130	124	33
CNFM08 - 612□DB - (B) - Ratio	0.55	4	489	140	148	35	532	140	148	38
CNFM1 - 612□DB - (B) - Ratio	0.75	4	489	140	148	35	532	140	148	38
CNFM1H - 612□DB - (B) - Ratio	1.1	4	516	145	160	39	578	145	160	44
CNFM2 - 612□DB - (B) - Ratio	1.5	4	516	145	160	39	578	145	160	44

Note: 1. □ indicates motor capacity.
2. Dimension of shaft end diameter: Dimension tolerance conforms to JIS B 0401-1976 "h6."
3. Dimension of shaft end key: Dimension tolerance conforms to JIS B 1301-1996 "Parallel Key."
4. Pilot diameter (φD3): Dimension tolerance conforms to JIS B 0401-1976 "g6."

Dimension Tables Gearmotors (Horizontal Direction, Flange Mount)

CHFM□ (Note: 1) - 613□DA to 614□DC

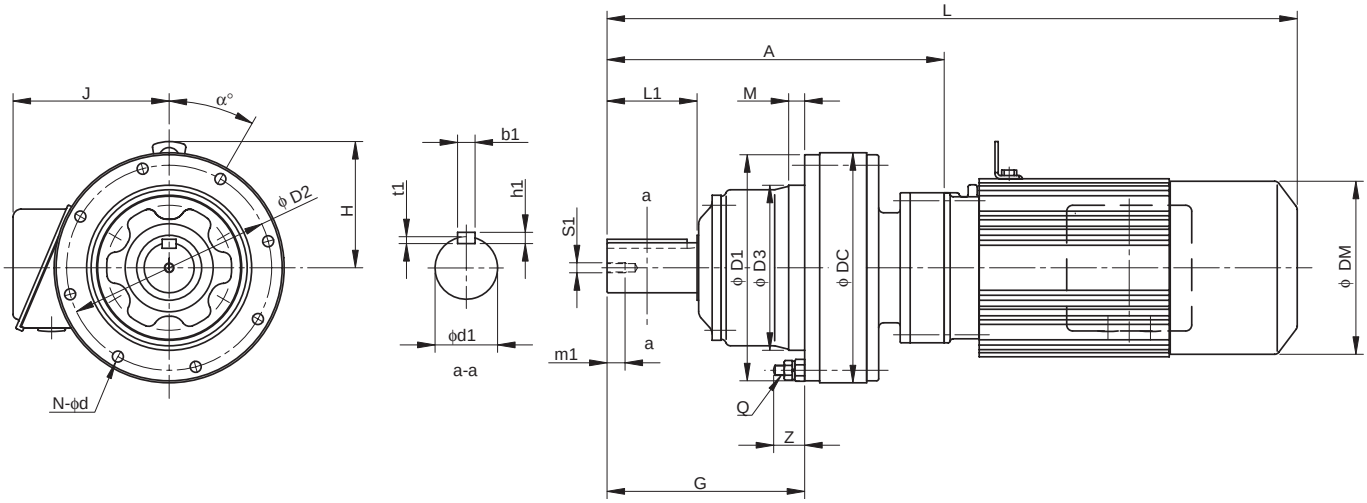

Frame size (Note: 5)	A	G	D1	D2	D3	DC	H	Q	Z	M	N	d	α°	Output Shaft (Note: 2, 3, 7) d1	L1	b1	h1	t1	S1	m1
613□DA	294	178	226	205	165	230	150	M10	31	16	6	11	60	50	70	14	9	5.5	M10	18
613□DB	303	178	226	205	165	230	150	M10	31	16	6	11	60	50	70	14	9	5.5	M10	18
613□DC	317	178	226	205	165	230	150	M10	31	16	6	11	60	50	70	14	9	5.5	M10	18
614□DA	314	198	226	205	165	230	150	M10	31	16	6	11	60	50	90	14	9	5.5	M10	18
614□DB	323	198	226	205	165	230	150	M10	31	16	6	11	60	50	90	14	9	5.5	M10	18
614□DC	337	198	226	205	165	230	150	M10	31	16	6	11	60	50	90	14	9	5.5	M10	18

Model (Note: 5, 6)	Motor [kW]	Motor [P]	Standard L	Standard J	Standard DM	Standard W [kg]	With Brake L	With Brake J	With Brake DM	With Brake W [kg]
CHFM02 - 613□DA - (B) - Ratio	0.2	4	474	130	124	40	502	130	124	41
CHFM03 - 613□DA - (B) - Ratio	0.25	4	474	130	124	40	522	130	124	41
CHFM05 - 613□DA - (B) - Ratio	0.4	4	490	130	124	41	522	130	124	42
CHFM02 - 613□DB - (B) - Ratio	0.2	4	483	130	124	42	511	130	124	44
CHFM03 - 613□DB - (B) - Ratio	0.25	4	483	130	124	42	511	130	124	44
CHFM05 - 613□DB - (B) - Ratio	0.4	4	499	130	124	43	531	130	124	45
CHFM08 - 613□DB - (B) - Ratio	0.55	4	540	140	148	47	583	140	148	50
CHFM1 - 613□DB - (B) - Ratio	0.75	4	540	140	148	47	583	140	148	50
CHFM1H - 613□DB - (B) - Ratio	1.1	4	573	145	160	51	635	145	160	56
CHFM2 - 613□DB - (B) - Ratio	1.5	4	573	145	160	51	635	145	160	56
CHFM08 - 613□DC - (B) - Ratio	0.55	4	554	140	148	49	597	140	148	52
CHFM1 - 613□DC - (B) - Ratio	0.75	4	554	140	148	49	597	140	148	52
CHFM2 - 613□DC - (B) - Ratio	1.5	4	587	145	160	53	649	145	160	58
CHFM3 - 613□DC - (B) - Ratio	2.2	4	607	152	173	57	670	152	173	63
CHFM02 - 614□DA - (B) - Ratio	0.2	4	494	130	124	40	522	130	124	41
CHFM03 - 614□DA - (B) - Ratio	0.25	4	494	130	124	40	522	130	124	41
CHFM05 - 614□DA - (B) - Ratio	0.4	4	510	130	124	41	542	130	124	42
CHFM02 - 614□DB - (B) - Ratio	0.2	4	503	130	124	42	531	130	124	44
CHFM03 - 614□DB - (B) - Ratio	0.25	4	503	130	124	42	531	130	124	44
CHFM05 - 614□DB - (B) - Ratio	0.4	4	519	130	124	43	551	130	124	47
CHFM08 - 614□DB - (B) - Ratio	0.55	4	560	140	148	47	603	140	148	50
CHFM1 - 614□DB - (B) - Ratio	0.75	4	560	140	148	47	603	140	148	50
CHFM1H - 614□DB - (B) - Ratio	1.1	4	593	145	160	51	655	145	160	54
CHFM2 - 614□DB - (B) - Ratio	1.5	4	593	145	160	51	655	145	160	54
CHFM08 - 614□DC - (B) - Ratio	0.55	4	574	140	148	49	617	140	148	52
CHFM1 - 614□DC - (B) - Ratio	0.75	4	574	140	148	49	617	140	148	52
CHFM1H - 614□DC - (B) - Ratio	1.1	4	607	145	160	53	669	145	160	58
CHFM2 - 614□DC - (B) - Ratio	1.5	4	607	145	160	53	669	145	160	58
CHFM3 - 614□DC - (B) - Ratio	2.2	4	627	152	173	57	690	152	173	63

Note: 5. □ indicates 0 or 5, expressing combination with reduction ratio. Refer to the Selection Table for details.
6. "B" after the frame size indicates models equipped with brake.
7. Dimension of shaft end: Refer to pages F-28 to F-29 for details.
8. Dimensions in above drawings are subject to change without notice.

Dimension Tables Gearmotors (Horizontal Direction, Flange Mount)

CHFM□ Note: 1 - 616□DA to 618□DA

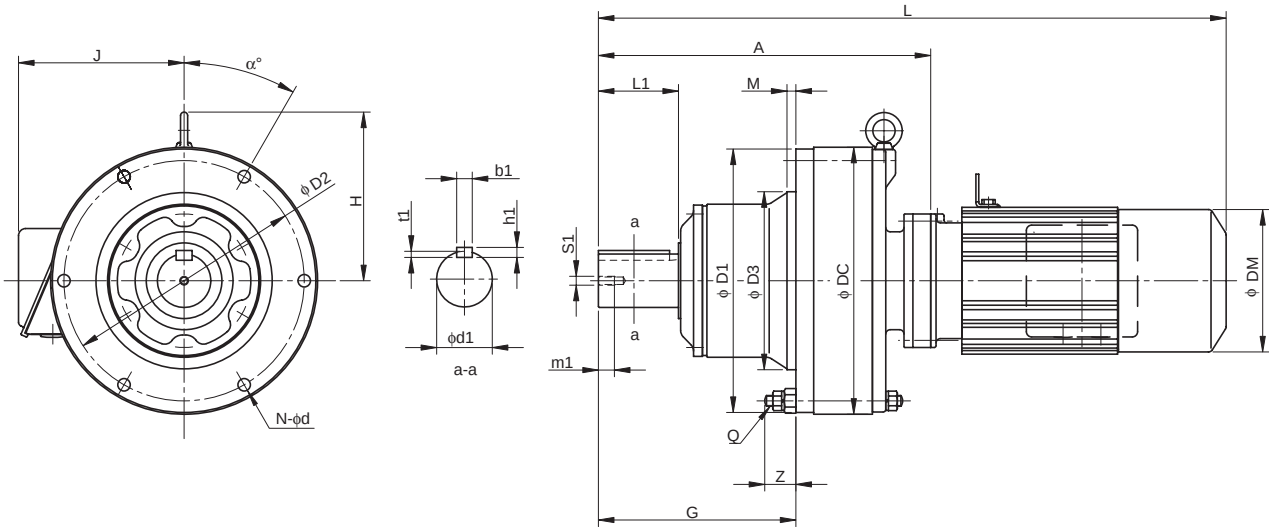

Frame size Note: 5	A	G	D1	D2	D3	DC	H	Q	Z	M	N	d	α°	Output Shaft Note: 2, 3, 7 d1	L1	b1	h1	t1	S1	m1
616□DA	373	222	296	270	200	300	189	M12	35	10	6	14	30	60	90	18	11	7	M10	18
616□DB	387	222	296	270	200	300	189	M12	35	10	6	14	30	60	90	18	11	7	M10	18
617□DA	418	262	330	300	250	340	216	M12	41	12	8	14	22.5	70	90	20	12	7.5	M12	24
617□DB	432	262	330	300	250	340	216	M12	41	12	8	14	22.5	70	90	20	12	7.5	M12	24
618□DA	474	299	360	330	280	370	231	M12	38	12	8	14	22.5	80	110	22	14	9	M12	24

Model Note: 5, 6	Motor [kW]	[P]	Standard L	J	DM	W [kg]	With Brake L	J	DM	W [kg]
CHFM02 - 616□DA - (B) - Ratio	0.2	4	553	130	124	72	581	130	124	74
CHFM03 - 616□DA - (B) - Ratio	0.25	4	553	130	124	72	581	130	124	74
CHFM05 - 616□DA - (B) - Ratio	0.4	4	569	130	124	73	601	130	124	75
CHFM08 - 616□DA - (B) - Ratio	0.55	4	610	140	148	77	653	140	148	80
CHFM1 - 616□DA - (B) - Ratio	0.75	4	610	140	148	77	653	140	148	80
CHFM1H - 616□DA - (B) - Ratio	1.1	4	643	145	160	81	705	145	160	86
CHFM2 - 616□DA - (B) - Ratio	1.5	4	643	145	160	81	705	145	160	86
CHFM08 - 616□DB - (B) - Ratio	0.55	4	624	140	148	79	667	140	148	82
CHFM1 - 616□DB - (B) - Ratio	0.75	4	624	140	148	79	667	140	148	82
CHFM1H - 616□DB - (B) - Ratio	1.1	4	657	145	160	83	719	145	160	88
CHFM2 - 616□DB - (B) - Ratio	1.5	4	657	145	160	83	719	145	160	88
CHFM3 - 616□DB - (B) - Ratio	2.2	4	677	152	173	87	740	152	173	93
CHFM02 - 617□DA - (B) - Ratio	0.2	4	598	130	124	92	626	130	124	94
CHFM03 - 617□DA - (B) - Ratio	0.25	4	598	130	124	92	626	130	124	94
CHFM05 - 617□DA - (B) - Ratio	0.4	4	614	130	124	93	646	130	124	95
CHFM08 - 617□DA - (B) - Ratio	0.55	4	655	140	148	97	698	140	148	100
CHFM1 - 617□DA - (B) - Ratio	0.75	4	655	140	148	97	698	140	148	100
CHFM1H - 617□DA - (B) - Ratio	1.1	4	688	145	160	101	750	145	160	106
CHFM2 - 617□DA - (B) - Ratio	1.5	4	688	145	160	101	750	145	160	106
CHFM08 - 617□DB - (B) - Ratio	0.55	4	669	140	148	98	712	140	148	101
CHFM1 - 617□DB - (B) - Ratio	0.75	4	669	140	148	98	712	140	148	101
CHFM1H - 617□DB - (B) - Ratio	1.1	4	702	145	160	102	764	145	160	107
CHFM2 - 617□DB - (B) - Ratio	1.5	4	702	145	160	102	764	145	160	107
CHFM3 - 617□DB - (B) - Ratio	2.2	4	722	152	173	106	785	152	173	112
CHFM05 - 618□DA - (B) - Ratio	0.4	4	670	130	124	136	702	130	124	138
CHFM08 - 618□DA - (B) - Ratio	0.55	4	711	140	148	140	754	140	148	143
CHFM1 - 618□DA - (B) - Ratio	0.75	4	711	140	148	140	754	140	148	143
CHFM1H - 618□DA - (B) - Ratio	1.1	4	744	145	160	144	806	145	160	149
CHFM2 - 618□DA - (B) - Ratio	1.5	4	744	145	160	144	806	145	160	149
CHFM3 - 618□DA - (B) - Ratio	2.2	4	764	152	173	148	827	152	173	154

Note: 1. □ indicates motor capacity.
2. Dimension of shaft end diameter: Dimension tolerance conforms to JIS B 0401-1976 "h6."
3. Dimension of shaft end key: Dimension tolerance conforms to JIS B 1301-1996 "Parallel Key."
4. Pilot diameter (φD3): Dimension tolerance conforms to JIS B 0401-1976 "g6."

Dimension Tables Gearmotors (Horizontal Direction, Flange Mount)

CHFM□ - 616□DC to 618□DB

Note: 1

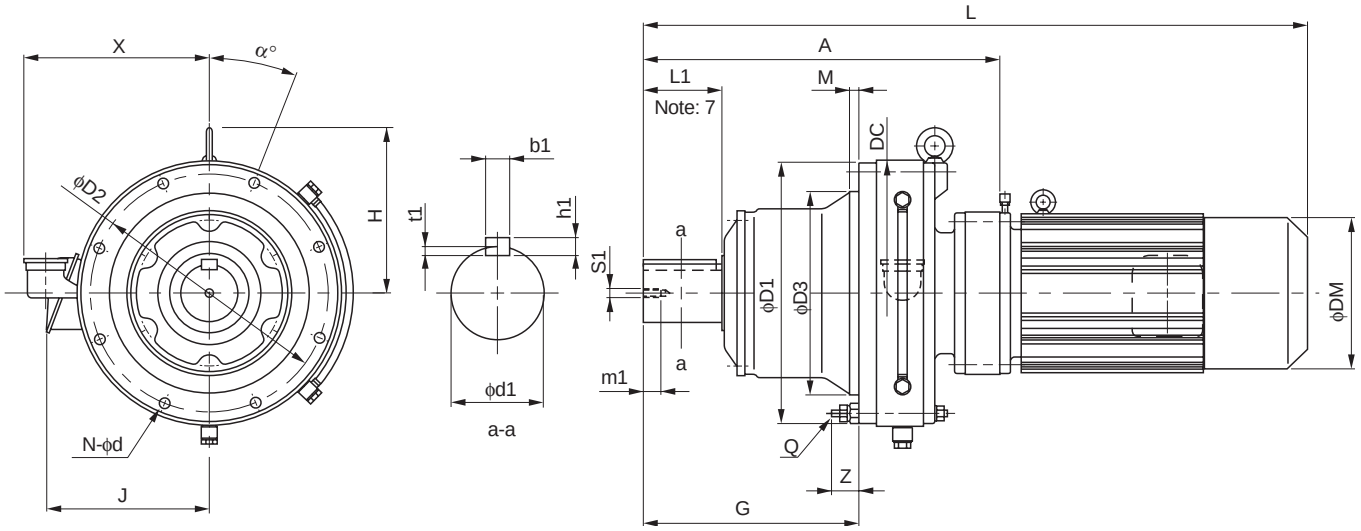

Frame size Note: 5	A	G	D1	D2	D3	DC	H	Q	Z	M	N	d	α°	X	Output Shaft Note: 2, 3, 7 d1	L1	b1	h1	t1	S1	m1
616□DC	389	222	296	270	200	300	189	M12	35	10	6	14	30	228	60	90	18	11	7	M10	18
617□DC	436	262	330	300	250	340	216	M12	41	12	8	14	22.5	243	70	90	20	12	7.5	M12	24
618□DB	496	299	360	330	280	370	231	M12	38	12	8	14	22.5	258	80	110	22	14	9	M12	24

Model Note: 5, 6	Motor [kW]	Motor [P]	Standard L	Standard J	Standard DM	Standard W [kg]	With Brake L	With Brake J	With Brake DM	With Brake W [kg]
CHFM1H - 616□DC - (B) - Ratio	1.1	4	659	145	160	89	721	145	160	94
CHFM2 - 616□DC - (B) - Ratio	1.5	4	659	145	160	89	721	145	160	94
CHFM3 - 616□DC - (B) - Ratio	2.2	4	679	152	173	93	742	152	173	100
CHFM4 - 616□DC - (B) - Ratio	3.0	4	702	168	212	103	774	168	212	113
CHFM5 - 616□DC - (B) - Ratio	3.7	4	702	168	212	103	774	168	212	113
CHFM8 - 616□DC - (B) - Ratio	5.5	4	746	168	212	110	818	168	212	120
CHFM1H - 617□DC - (B) - Ratio	1.1	4	706	145	160	113	768	145	160	118
CHFM2 - 617□DC - (B) - Ratio	1.5	4	706	145	160	113	768	145	160	118
CHFM3 - 617□DC - (B) - Ratio	2.2	4	726	152	173	117	789	152	173	124
CHFM4 - 617□DC - (B) - Ratio	3.0	4	749	168	212	127	821	168	212	137
CHFM5 - 617□DC - (B) - Ratio	3.7	4	749	168	212	127	821	168	212	137
CHFM8 - 617□DC - (B) - Ratio	5.5	4	793	168	212	134	865	168	212	144
CHFM1H - 618□DB - (B) - Ratio	1.1	4	766	145	160	159	828	145	160	164
CHFM2 - 618□DB - (B) - Ratio	1.5	4	766	145	160	159	828	145	160	164
CHFM3 - 618□DB - (B) - Ratio	2.2	4	786	152	173	162	849	152	173	169
CHFM4 - 618□DB - (B) - Ratio	3.0	4	809	168	212	172	881	168	212	182
CHFM5 - 618□DB - (B) - Ratio	3.7	4	809	168	212	172	881	168	212	182
CHFM8 - 618□DB - (B) - Ratio	5.5	4	853	168	212	179	925	168	212	189
CHFM10 - 618□DB - (B) - Ratio	7.5	4	876	213	251	194	971	213	251	212
CHFM15 - 618□DB - (B) - Ratio	11	4	936	213	251	208	1031	213	251	226

Note: 5. □ indicates 0 or 5, expressing combination with reduction ratio. Refer to the Selection Table for details.
6. "B" after the frame size indicates models equipped with brake.
7. Dimension of shaft end: Refer to pages F-28 to F-29 for details.
8. Dimensions in above drawings are subject to change without notice.

Dimension Tables Gearmotors (Horizontal Direction, Flange Mount)

CHFM□ Note: 1 - 619□DA to 619□DB

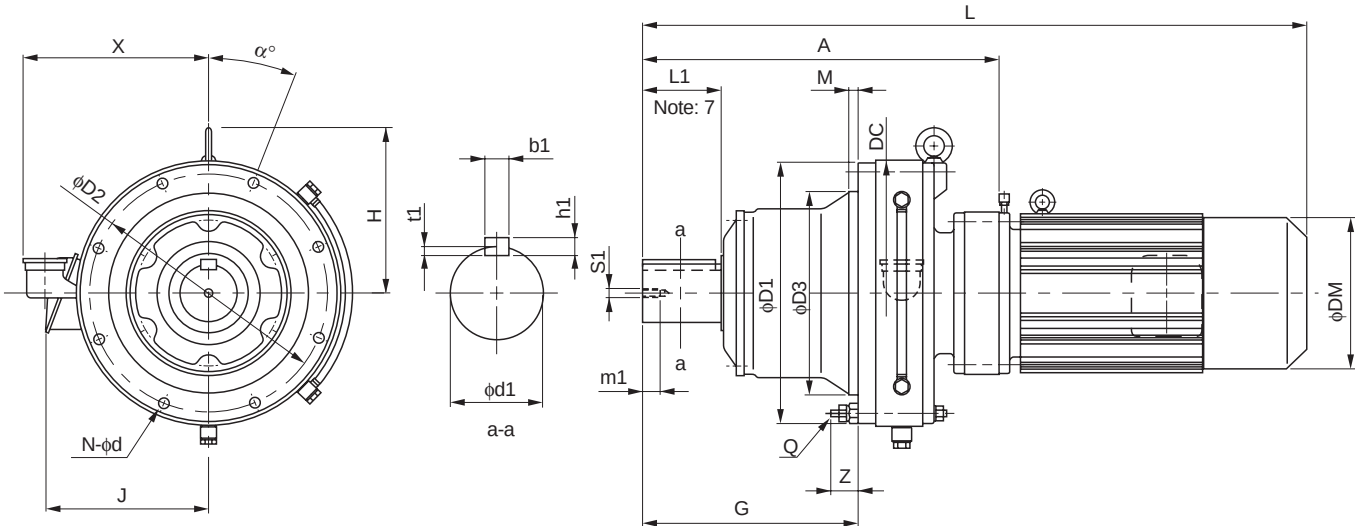

Frame size Note: 5	A	G	D1	D2	D3	DC	H	Q	Z	M	N	d	α°	X	Output Shaft Note: 2, 3, 7						
															d1	L1	b1	h1	t1	S1	m1
619□DA	556	365	420	380	320	430	281	M12	43	10	12	14	15	285	95	135	25	14	9	M20	34
619□DB	572	365	420	380	320	430	281	M12	43	10	12	14	15	285	95	135	25	14	9	M20	34

Model Note: 5, 6	Motor		Standard				With Brake			
	[kW]	[P]	L	J	DM	W [kg]	L	J	DM	W [kg]
CHFM1 - 619□DA - (B) - Ratio	0.75	4	793	140	148	201	836	140	148	204
CHFM1H - 619□DA - (B) - Ratio	1.1	4	826	145	160	205	888	145	160	210
CHFM2 - 619□DA - (B) - Ratio	1.5	4	826	145	160	205	888	145	160	210
CHFM3 - 619□DA - (B) - Ratio	2.2	4	846	152	173	209	909	152	173	216
CHFM4 - 619□DA - (B) - Ratio	3.0	4	869	168	212	219	941	168	212	229
CHFM5 - 619□DA - (B) - Ratio	3.7	4	869	168	212	219	941	168	212	229
CHFM8 - 619□DA - (B) - Ratio	5.5	4	913	168	212	226	985	168	212	236
CHFM2 - 619□DB - (B) - Ratio	1.5	4	842	145	160	212	904	145	160	217
CHFM3 - 619□DB - (B) - Ratio	2.2	4	862	152	173	216	925	152	173	223
CHFM4 - 619□DB - (B) - Ratio	3.0	4	885	168	212	226	957	168	212	236
CHFM5 - 619□DB - (B) - Ratio	3.7	4	885	168	212	226	957	168	212	236
CHFM8 - 619□DB - (B) - Ratio	5.5	4	929	168	212	233	1001	168	212	243
CHFM10 - 619□DB - (B) - Ratio	7.5	4	952	213	251	248	1047	213	251	266
CHFM15 - 619□DB - (B) - Ratio	11	4	1012	213	251	262	1107	213	251	280
CHFM20 - 619□DB - (B) - Ratio	15	4	1102	261	324	314	1207	261	324	348

Note: 1. □ indicates motor capacity.
2. Dimension of shaft end diameter: Dimension tolerance conforms to JIS B 0401-1976 "h6."
3. Dimension of shaft end key: Dimension tolerance conforms to JIS B 1301-1996 "Parallel Key."
4. Pilot diameter (φD3): Dimension tolerance conforms to JIS B 0401-1976 "g6."

Dimension Tables Gearmotors (Horizontal Direction, Flange Mount)

CHFM□ - 6205DA to 6215DA

Note: 1

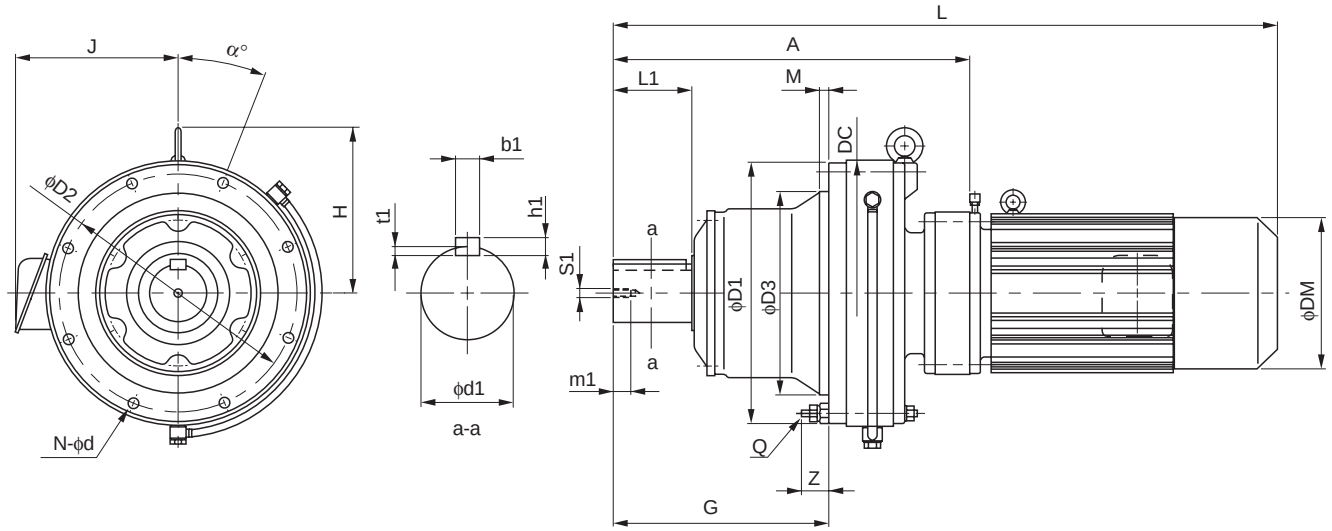

Frame size	A	G	D1	D2	D3	DC	H	Q	Z	M	N	d	α°	Output Shaft Note: 2, 3, 7						
														d1	L1	b1	h1	t1	S1	m1
6205DA	597	410	443	405	360	448	283	M16	57	20	12	18	15	100	165	28	16	10	M20	34
6205DB	624	410	443	405	360	448	283	M16	57	20	12	18	15	100	165	28	16	10	M20	34
6215DA	650	423	480	440	390	485	312	M18	57	20	12	20.5	15	110	165	28	16	10	M20	34

Model Note: 6	Motor		Standard				With Brake			
	[kW]	[P]	L	J	DM	W [kg]	L	J	DM	W [kg]
CHFM1 - 6205DA - (B) - Ratio	0.75	4	834	140	148	225	877	140	148	228
CHFM2 - 6205DA - (B) - Ratio	1.5	4	867	145	160	229	929	145	160	234
CHFM3 - 6205DA - (B) - Ratio	2.2	4	887	152	173	233	949	152	173	240
CHFM4 - 6205DA - (B) - Ratio	3.0	4	910	168	212	243	982	168	212	253
CHFM5 - 6205DA - (B) - Ratio	3.7	4	910	168	212	243	982	168	212	253
CHFM8 - 6205DA - (B) - Ratio	5.5	4	954	168	212	250	1026	168	212	260
CHFM3 - 6205DB - (B) - Ratio	2.2	4	914	152	173	245	977	152	173	252
CHFM4 - 6205DB - (B) - Ratio	3.0	4	937	168	212	255	1009	168	212	265
CHFM5 - 6205DB - (B) - Ratio	3.7	4	937	168	212	255	1009	168	212	265
CHFM8 - 6205DB - (B) - Ratio	5.5	4	981	168	212	262	1053	168	212	272
CHFM10 - 6205DB - (B) - Ratio	7.5	4	1004	213	251	277	1099	213	251	295
CHFM15 - 6205DB - (B) - Ratio	11	4	1064	213	251	290	1159	213	251	308
CHFM20 - 6205DB - (B) - Ratio	15	4	1154	261	324	342	1249	261	324	375
CHFM2 - 6215DA - (B) - Ratio	1.5	4	920	145	160	321	982	145	160	326
CHFM3 - 6215DA - (B) - Ratio	2.2	4	940	152	173	324	1003	152	173	331
CHFM4 - 6215DA - (B) - Ratio	3.0	4	963	168	212	334	1035	168	212	344
CHFM5 - 6215DA - (B) - Ratio	3.7	4	963	168	212	334	1035	168	212	344
CHFM8 - 6215DA - (B) - Ratio	5.5	4	1007	168	212	341	1079	168	212	351
CHFM10 - 6215DA - (B) - Ratio	7.5	4	1030	213	251	356	1125	213	251	374
CHFM15 - 6215DA - (B) - Ratio	11	4	1090	213	251	369	1185	213	251	387
CHFM20 - 6215DA - (B) - Ratio	15	4	1180	261	324	421	1285	261	324	455

Note: 5. □ indicates 0 or 5, expressing combination with reduction ratio. Refer to the Selection Table for details.
6. "B" after the frame size indicates models equipped with brake.
7. Dimension of shaft end: Refer to pages F-28 to F-29 for details.
8. Dimensions in above drawings are subject to change without notice.

Dimension Tables Gearmotors (Horizontal Direction, Flange Mount)

CHFM□ - 6215DB to 6225DB

Note: 1

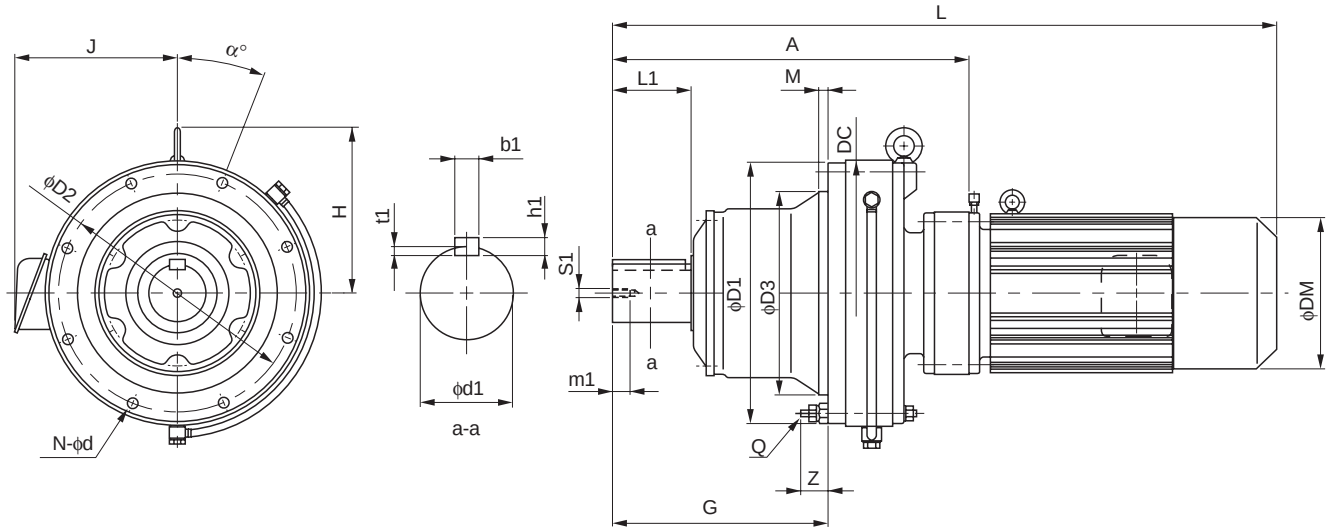

Frame size	A	G	D1	D2	D3	DC	H	Q	Z	M	N	d	α°	Output Shaft Note: 2, 3, 6						
														d1	L1	b1	h1	t1	S1	m1
6215DB	675	423	480	440	390	485	312	M18	57	20	12	20.5	15	110	165	28	16	10	M20	34
6225DA	692	454	521	475	420	526	333	M20	65	20	12	22	15	120	165	32	18	11	M20	34
6225DB	735	454	521	475	420	526	333	M20	65	20	12	22	15	120	165	32	18	11	M20	34

Model Note: 5	Motor		Standard				With Brake			
	[kW]	[P]	L	J	DM	W [kg]	L	J	DM	W [kg]
CHFM5 - 6215DB - (B) - Ratio	3.7	4	993	168	212	353	1065	168	212	363
CHFM8 - 6215DB - (B) - Ratio	5.5	4	1037	168	212	360	1109	168	212	370
CHFM10 - 6215DB - (B) - Ratio	7.5	4	1060	213	251	376	1155	213	251	393
CHFM15 - 6215DB - (B) - Ratio	11	4	1120	213	251	390	1215	213	251	407
CHFM20 - 6215DB - (B) - Ratio	15	4	1205	261	324	443	1310	261	324	477
CHFM25 - 6215DB - (B) - Ratio	18.5	4	1300	340	394	518	1465	340	394	569
CHFM30 - 6215DB - (B) - Ratio	22	4	1300	340	394	518	1465	340	394	569
CHFM2 - 6225DA - (B) - Ratio	1.5	4	962	145	160	378	1024	145	160	383
CHFM3 - 6225DA - (B) - Ratio	2.2	4	982	152	173	381	1045	152	173	388
CHFM4 - 6225DA - (B) - Ratio	3.0	4	1005	168	212	391	1077	168	212	401
CHFM5 - 6225DA - (B) - Ratio	3.7	4	1005	168	212	391	1077	168	212	401
CHFM8 - 6225DA - (B) - Ratio	5.5	4	1049	168	212	398	1121	168	212	408
CHFM10 - 6225DA - (B) - Ratio	7.5	4	1072	213	251	413	1167	213	251	431
CHFM15 - 6225DA - (B) - Ratio	11	4	1132	213	251	427	1227	213	251	445
CHFM20 - 6225DA - (B) - Ratio	15	4	1222	261	324	479	1312	261	324	512
CHFM5 - 6225DB - (B) - Ratio	3.7	4	1058	168	212	436	1130	168	212	447
CHFM8 - 6225DB - (B) - Ratio	5.5	4	1102	168	212	443	1174	168	212	454
CHFM10 - 6225DB - (B) - Ratio	7.5	4	1125	213	251	458	1220	213	251	476
CHFM15 - 6225DB - (B) - Ratio	11	4	1185	213	251	472	1280	213	251	490
CHFM20 - 6225DB - (B) - Ratio	15	4	1265	261	324	526	1370	261	324	560
CHFM25 - 6225DB - (B) - Ratio	18.5	4	1360	340	394	598	1525	340	394	649
CHFM30 - 6225DB - (B) - Ratio	22	4	1360	340	394	598	1525	340	394	649
CHFM40 - 6225DB - (B) - Ratio	30	4	1360	340	394	615	1525	340	394	666

Note: 1. □ indicates motor capacity.
2. Dimension of shaft end diameter: Dimension tolerance conforms to JIS B 0401-1976 "h6."
3. Dimension of shaft end key: Dimension tolerance conforms to JIS B 1301-1996 "Parallel Key."
4. Pilot diameter (φD3): Dimension tolerance conforms to JIS B 0401-1976 "g6."

Dimension Tables Gearmotors (Horizontal Direction, Flange Mount)

CHFM□ - 6235DA to 6245DB

Note: 1

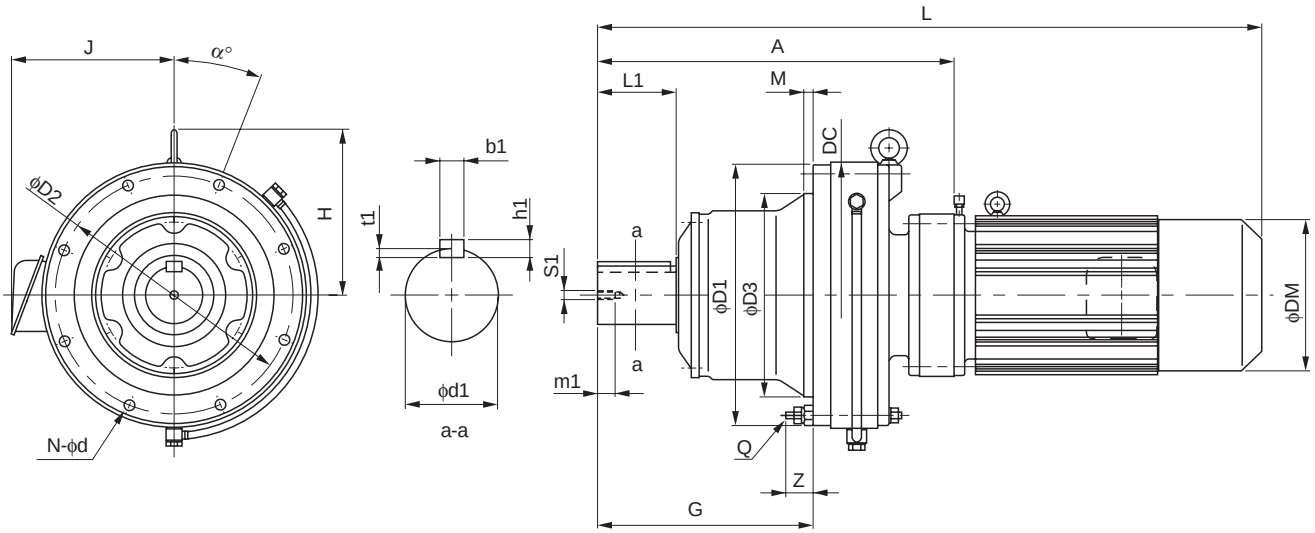

Frame size	A	G	D1	D2	D3	DC	H	Q	Z	M	N	d	α°	Output Shaft Note: 2, 3, 6						
														d1	L1	b1	h1	t1	S1	m1
6235DA	778	505	557	510	455	562	351	M20	68	20	12	22	15	130	200	32	18	11	M24	41
6235DB	800	505	557	510	455	562	351	M20	68	20	12	22	15	130	200	32	18	11	M24	41
6245DA	816	529	615	560	500	614	395	M24	65	25	12	27	15	140	200	36	20	12	M24	41
6245DB	837	529	615	560	500	614	395	M24	65	25	12	27	15	140	200	36	20	12	M24	41

Model Note: 5	Motor		Standard				With Brake			
	[kW]	[P]	L	J	DM	W [kg]	L	J	DM	W [kg]
CHFM3 - 6235DA - (B) - Ratio	2.2	4	1068	152	173	485	1131	152	173	491
CHFM4 - 6235DA - (B) - Ratio	3.0	4	1091	168	212	494	1163	168	212	504
CHFM5 - 6235DA - (B) - Ratio	3.7	4	1091	168	212	494	1163	168	212	504
CHFM8 - 6235DA - (B) - Ratio	5.5	4	1135	168	212	501	1207	168	212	511
CHFM10 - 6235DA - (B) - Ratio	7.5	4	1163	213	251	517	1258	213	251	534
CHFM15 - 6235DA - (B) - Ratio	11	4	1223	213	251	531	1318	213	251	548
CHFM20 - 6235DA - (B) - Ratio	15	4	1308	261	324	584	1398	261	324	618
CHFM25 - 6235DA - (B) - Ratio	18.5	4	1403	340	394	661	1568	340	394	712
CHFM30 - 6235DA - (B) - Ratio	22	4	1403	340	394	661	1568	340	394	712
CHFM15 - 6235DB - (B) - Ratio	11	4	1245	213	251	567	1340	213	251	585
CHFM20 - 6235DB - (B) - Ratio	15	4	1330	261	324	629	1435	261	324	735
CHFM25 - 6235DB - (B) - Ratio	18.5	4	1425	340	394	696	1590	340	394	747
CHFM30 - 6235DB - (B) - Ratio	22	4	1425	340	394	696	1590	340	394	747
CHFM40 - 6235DB - (B) - Ratio	30	4	1425	340	394	710	1590	340	394	753
CHFM50 - 6235DB - (B) - Ratio	37	4	1540	340	394	748	1755	340	394	845
CHFM3 - 6245DA - (B) - Ratio	2.2	4	1106	152	173	593	1169	152	173	599
CHFM4 - 6245DA - (B) - Ratio	3.0	4	1129	168	212	602	1201	168	212	612
CHFM5 - 6245DA - (B) - Ratio	3.7	4	1129	168	212	602	1201	168	212	612
CHFM8 - 6245DA - (B) - Ratio	5.5	4	1173	168	212	609	1245	168	212	619
CHFM10 - 6245DA - (B) - Ratio	7.5	4	1201	213	251	625	1296	213	251	642
CHFM15 - 6245DA - (B) - Ratio	11	4	1261	213	251	639	1356	213	251	656
CHFM20 - 6245DA - (B) - Ratio	15	4	1346	261	324	692	1451	261	324	726
CHFM25 - 6245DA - (B) - Ratio	18.5	4	1441	340	394	763	1606	340	394	814
CHFM30 - 6245DA - (B) - Ratio	22	4	1441	340	394	763	1606	340	394	814
CHFM15 - 6245DB - (B) - Ratio	11	4	1282	213	251	663	1377	213	251	681
CHFM20 - 6245DB - (B) - Ratio	15	4	1367	261	324	723	1472	261	324	752
CHFM25 - 6245DB - (B) - Ratio	18.5	4	1462	340	394	789	1627	340	394	840
CHFM30 - 6245DB - (B) - Ratio	22	4	1462	340	394	789	1627	340	394	840
CHFM40 - 6245DB - (B) - Ratio	30	4	1462	340	394	806	1627	340	394	849
CHFM50 - 6245DB - (B) - Ratio	37	4	1577	340	394	843	1792	340	394	940

Note: 5. "B" after the frame size indicates models equipped with brake.
6. Dimension of shaft end: Refer to pages F-28 to F-29 for details.
7. Dimensions in above drawings are subject to change without notice.

Dimension Tables Gearmotors (Horizontal Direction, Flange Mount)

CHFM□ - 6255DA to 6265DA

Note: 1

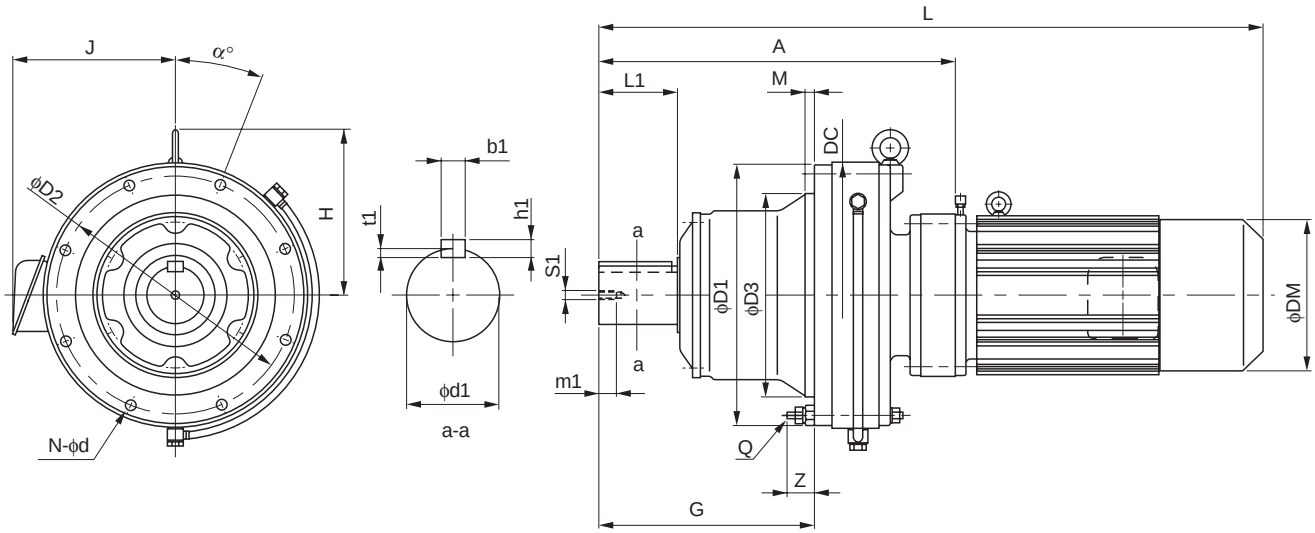

Frame size	A	G	D1	D2	D3	DC	H	Q	Z	M	N	d	α°	Output Shaft Note: 2, 3, 8						
														d1	L1	b1	h1	t1	S1	m1
6255DA	956	616	666	610	540	670	386	M24	88	30	12	27	15	160	240	40	22	13	M30	49
6255DB	978	616	666	610	540	670	386	M24	88	30	12	27	15	160	240	40	22	13	M30	49
6265DA	1088	712	730	660	570	736	453	M30	82	40	12	34	15	170	300	40	22	13	M30	49

Model Note: 7	Motor		Standard				With Brake			
	[kW]	[P]	L	J	DM	W [kg]	L	J	DM	W [kg]
CHFM5 - 6255DA - (B) - Ratio	3.7	4	1284	168	212	868	1356	168	212	878
CHFM8 - 6255DA - (B) - Ratio	5.5	4	1328	168	212	878	1400	168	212	888
CHFM10 - 6255DA - (B) - Ratio	7.5	4	1346	213	251	893	1441	213	251	908
CHFM15 - 6255DA - (B) - Ratio	11	4	1406	213	251	908	1501	213	251	923
CHFM20 - 6255DA - (B) - Ratio	15	4	1486	261	324	958	1591	261	324	994
CHFM25 - 6255DA - (B) - Ratio	18.5	4	1581	340	394	1032	1746	340	394	1083
CHFM30 - 6255DA - (B) - Ratio	22	4	1581	340	394	1032	1746	340	394	1083
CHFM40 - 6255DA - (B) - Ratio	30	4	1581	340	394	1052	1746	340	394	1095
CHFM15 - 6255DB - (B) - Ratio	11	4	1443	213	251	981	1538	213	251	996
CHFM20 - 6255DB - (B) - Ratio	15	4	1508	261	324	1031	1613	261	324	1065
CHFM25 - 6255DB - (B) - Ratio	18.5	4	1603	340	394	1107	1768	340	394	1158
CHFM30 - 6255DB - (B) - Ratio	22	4	1603	340	394	1107	1768	340	394	1158
CHFM40 - 6255DB - (B) - Ratio	30	4	1603	340	394	1122	1768	340	394	1165
CHFM50 - 6255DB - (B) - Ratio	37	4	1718	340	394	1159	1928	340	394	1256
CHFM60 - 6255DB - (B) - Ratio	45	4	1718	340	394	1159	1928	340	394	1256
CHFM8 - 6265DA - (B) - Ratio	5.5	4	1480	168	212	1196	1552	168	212	1206
CHFM10 - 6265DA - (B) - Ratio	7.5	4	1493	213	251	1211	1588	213	251	1231
CHFM15 - 6265DA - (B) - Ratio	11	4	1553	213	251	1226	1648	213	251	1241
CHFM20 - 6265DA - (B) - Ratio	15	4	1618	261	324	1276	1723	261	324	1311
CHFM25 - 6265DA - (B) - Ratio	18.5	4	1713	340	394	1355	1878	340	394	1400
CHFM30 - 6265DA - (B) - Ratio	22	4	1713	340	394	1355	1878	340	394	1400
CHFM40 - 6265DA - (B) - Ratio	30	4	1713	340	394	1370	1878	340	394	1413
CHFM50 - 6265DA - (B) - Ratio	37	4	1828	340	394	1405	2043	340	394	1502
CHFM60 - 6265DA - (B) - Ratio	45	4	1828	340	394	1405	2043	340	394	1502

Note: 1. □ indicates motor capacity.
2. Dimension of shaft end diameter: Dimension tolerance conforms to JIS B 0401-1976 "h6."
3. Dimension of shaft end key: Dimension tolerance conforms to JIS B 1301-1996 "Parallel Key."
4. Pilot diameter (φD3) of CHFM type: Dimension tolerance conforms to JIS B 0401-1976 "g6."
5. Pilot diameter (φD3) of CVVM type: Dimension tolerance conforms to JIS B 0401-1976 "f8."

Dimension Tables Gearmotors (Vertical, Slow Speed Shaft Down, V-Flange Mount)

CVVM□ Note: 1 - 607□SK to 609□SK

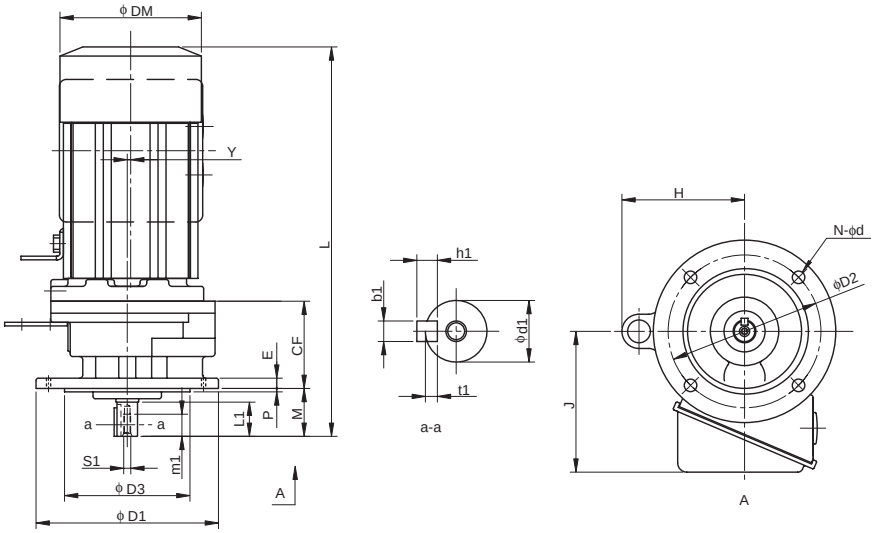

Frame size Note: 6	CF	D1	D2	D3	M	E	P	Y	N	d	H	Output Shaft Note: 2, 3, 8						
												d1	L1	b1	h1	t1	S1	m1
607□SK	77	160	134	110	42	9	3	0	4	11	-	18	30	6	6	3.5	M6	16
608□SK	92	160	134	110	48	9	3	0	4	11	-	22	35	6	6	3.5	M6	16
609□SK	118	160	134	110	48	9	3	0	4	11	107	28	35	8	7	4	M8	20

Model Note: 6, 7	Motor		Standard				With Brake			
	[kW]	[P]	L	J	DM	W [kg]	L	J	DM	W [kg]
CVVM05 - 607□SK - (B) - Ratio	0.4	4	310	130	124	12	342	130	124	13
CVVM08 - 607□SK - (B) - Ratio	0.55	4	350	140	148	15	394	140	148	17
CVVM1 - 607□SK - (B) - Ratio	0.75	4	350	140	148	15	394	140	148	17
CVVM05 - 608□SK - (B) - Ratio	0.4	4	336	130	124	13	368	130	124	14
CVVM08 - 608□SK - (B) - Ratio	0.55	4	377	140	148	16	420	140	148	18
CVVM1 - 608□SK - (B) - Ratio	0.75	4	377	140	148	16	420	140	148	18
CVVM1H - 608□SK - (B) - Ratio	1.1	4	410	145	160	21	472	145	160	25
CVVM2 - 608□SK - (B) - Ratio	1.5	4	410	145	160	21	472	145	160	25
CVVM05 - 609□SK - (B) - Ratio	0.4	4	362	130	124	15	394	130	124	16
CVVM08 - 609□SK - (B) - Ratio	0.55	4	403	140	148	18	446	140	148	20
CVVM1 - 609□SK - (B) - Ratio	0.75	4	403	140	148	18	446	140	148	20
CVVM1H - 609□SK - (B) - Ratio	1.1	4	436	145	160	23	498	145	160	27
CVVM2 - 609□SK - (B) - Ratio	1.5	4	436	145	160	23	498	145	160	27
CVVM3 - 609□SK - (B) - Ratio	2.2	4	456	152	173	27	519	152	173	33

Note: 6. □ indicates 0 or 5, expressing combination with reduction ratio. Refer to the Selection Table for details.
7. "B" after the frame size indicates models equipped with brake.
8. Dimension of shaft end: Refer to pages F-28 to F-29 for details.
9. Dimensions in above drawings are subject to change without notice.

Dimension Tables Gearmotors (Vertical, Slow Speed Shaft Down, V-Flange Mount)

CVVM□ Note: 1 - 610□SK to 611□SK

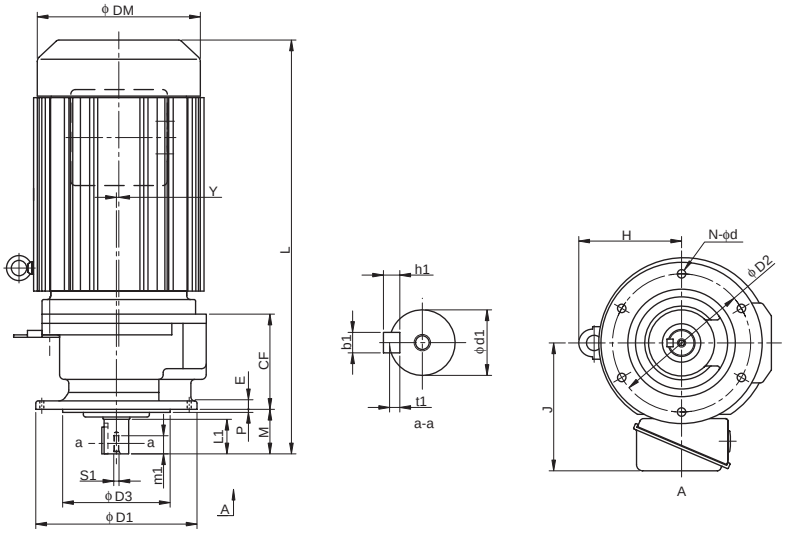

Frame size Note: 5	CF	D1	D2	D3	M	E	P	Y	N	d	H	Output Shaft Note: 2, 3, 7						
												d1	L1	b1	h1	t1	S1	m1
610□SK	122	160	134	110	48	9	3	0	4	11	116	28	35	8	7	4	M8	20
611□SK	124	210	180	140	58	11	4	3	6	11	134	32	45	10	8	5	M8	20

Model Note: 5, 6	Motor		Standard				With Brake			
	[kW]	[P]	L	J	DM	W [kg]	L	J	DM	W [kg]
CVVM05 - 610□SK - (B) - Ratio	0.4	4	362	130	124	16	393	130	124	17
CVVM08 - 610□SK - (B) - Ratio	0.55	4	403	140	148	19	452	140	148	21
CVVM1 - 610□SK - (B) - Ratio	0.75	4	403	140	148	19	452	140	148	21
CVVM1H - 610□SK - (B) - Ratio	1.1	4	436	145	160	24	493	145	160	28
CVVM2 - 610□SK - (B) - Ratio	1.5	4	436	145	160	24	493	145	160	28
CVVM3 - 610□SK - (B) - Ratio	2.2	4	456	152	173	28	519	152	173	34
CVVM4 - 610□SK - (B) - Ratio	3	4	491	168	212	40	563	168	212	51
CVVM5 - 610□SK - (B) - Ratio	3.7	4	491	168	212	40	563	168	212	51
CVVM08 - 611□SK - (B) - Ratio	0.55	4	419	140	148	29	462	140	148	31
CVVM1 - 611□SK - (B) - Ratio	0.75	4	419	140	148	29	462	140	148	31
CVVM1H - 611□SK - (B) - Ratio	1.1	4	452	145	160	34	514	145	160	38
CVVM2 - 611□SK - (B) - Ratio	1.5	4	452	145	160	34	514	145	160	38
CVVM3 - 611□SK - (B) - Ratio	2.2	4	472	152	173	38	535	152	173	44
CVVM4 - 611□SK - (B) - Ratio	3	4	495	168	212	50	567	168	212	61
CVVM5 - 611□SK - (B) - Ratio	3.7	4	495	168	212	50	567	168	212	61
CVVM8 - 611□SK - (B) - Ratio	5.5	4	539	168	212	58	611	168	212	69

Note: 1. □ indicates motor capacity.
2. Dimension of shaft end diameter: Dimension tolerance conforms to JIS B 0401-1976 "h6."
3. Dimension of shaft end key: Dimension tolerance conforms to JIS B 1301-1996 "Parallel Key."
4. Pilot diameter (ϕD3): Dimension tolerance conforms to JIS B 0401-1976 “f8.”

Dimension Tables Gearmotors (Universal Direction, V-Flange Mount)

CNVM□- 606□ to 609□ (Note: 1)

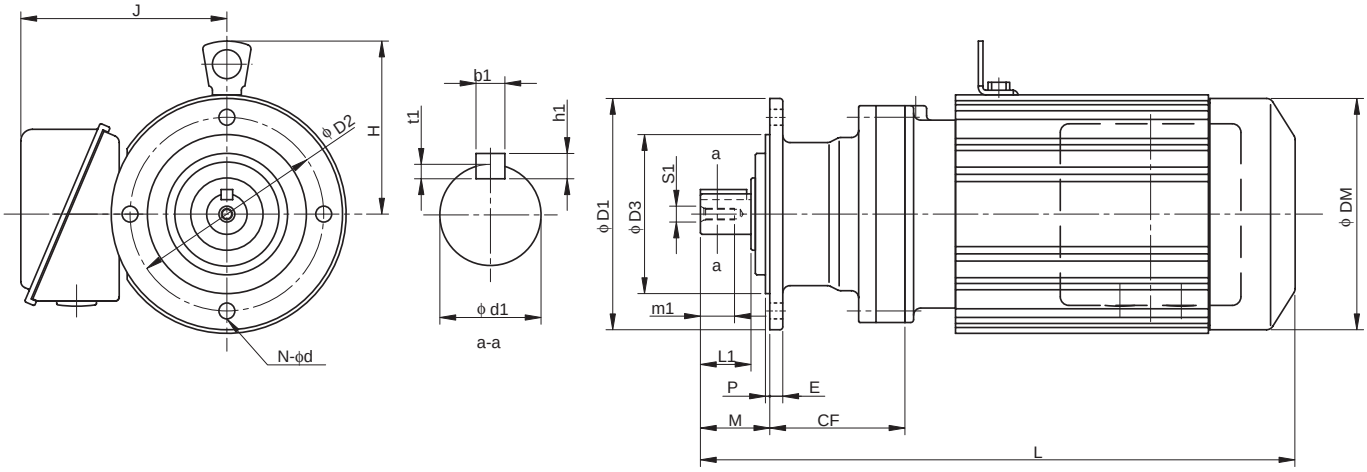

Frame size (Note: 5)	CF	D1	D2	D3	M	E	P	N	d	H	Output Shaft (Note: 2, 3, 7) d1	L1	b1	h1	t1	S1	m1
606□	58	120	102	80	34	8	3	6	9	-	14	25	5	5	3	M5	16
607□	56	160	134	110	42	9	3	4	11	-	18	30	6	6	3.5	M6	16
608□	81	160	134	110	48	9	3	4	11	-	22	35	6	6	3.5	M6	16
609□	94	160	134	110	48	9	3	4	11	107	28	35	8	7	4	M8	20

Model (Note: 5, 6)	Motor [kW]	Motor [P]	Standard L	Standard J	Standard DM	Standard W [kg]	With Brake L	With Brake J	With Brake DM	With Brake W [kg]
CNVM01 - 606□ - (B) - Ratio	0.1	4	254	130	119	7	261	130	124	9
CNVM02 - 606□ - (B) - Ratio	0.2	4	272	130	124	8	300	130	124	10
CNVM03 - 606□ - (B) - Ratio	0.25	4	272	130	124	9	300	130	124	10
CNVM01 - 607□ - (B) - Ratio	0.1	4	260	130	119	9	267	130	124	10
CNVM02 - 607□ - (B) - Ratio	0.2	4	278	130	124	10	306	130	124	11
CNVM03 - 607□ - (B) - Ratio	0.25	4	278	130	124	10	306	130	124	11
CNVM05 - 607□ - (B) - Ratio	0.4	4	294	130	124	11	326	130	124	12
CNVM01 - 608□ - (B) - Ratio	0.1	4	286	130	119	12	293	130	124	13
CNVM02 - 608□ - (B) - Ratio	0.2	4	304	130	124	13	332	130	124	14
CNVM03 - 608□ - (B) - Ratio	0.25	4	304	130	124	13	332	130	124	14
CNVM05 - 608□ - (B) - Ratio	0.4	4	320	130	124	15	352	130	124	16
CNVM08 - 608□ - (B) - Ratio	0.55	4	361	140	148	19	404	140	148	20
CNVM1 - 608□ - (B) - Ratio	0.75	4	361	140	148	19	404	140	148	20
CNVM01 - 609□ - (B) - Ratio	0.1	4	304	130	119	13	311	130	124	15
CNVM02 - 609□ - (B) - Ratio	0.2	4	322	130	124	14	350	130	124	16
CNVM03 - 609□ - (B) - Ratio	0.25	4	322	130	124	14	350	130	124	16
CNVM05 - 609□ - (B) - Ratio	0.4	4	338	130	124	15	370	130	124	17
CNVM08 - 609□ - (B) - Ratio	0.55	4	379	140	148	19	422	140	148	22
CNVM1 - 609□ - (B) - Ratio	0.75	4	379	140	148	19	422	140	148	22
CNVM1H - 609□ - (B) - Ratio	1.1	4	412	145	160	22	474	145	160	27
CNVM2 - 609□ - (B) - Ratio	1.5	4	412	145	160	22	474	145	160	27

Note: 5. □ indicates 0 or 5, expressing combination with reduction ratio. Refer to the Selection Table for details.
6. "B" after the frame size indicates models equipped with brake.
7. Dimension of shaft end: Refer to pages F-28 to F-29 for details.
8. Dimensions in above drawings are subject to change without notice.

Dimension Tables Gearmotors (Universal Direction, V-Flange Mount)

CNVM□ - 610□ to 612□ (Note: 1)

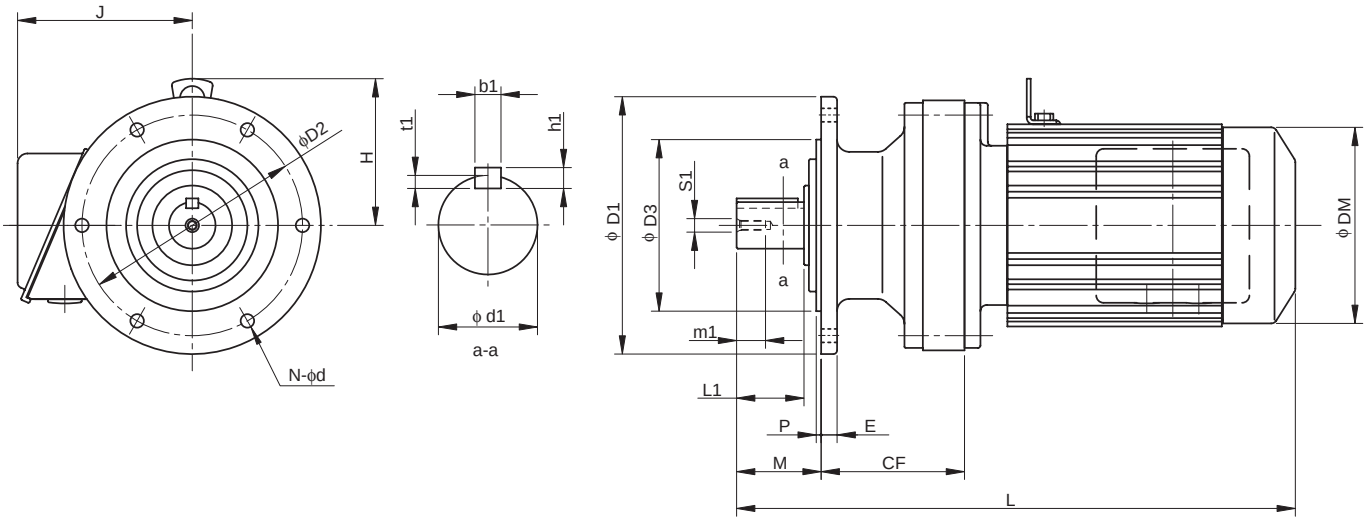

Frame size (Note: 5)	CF	D1	D2	D3	M	E	P	N	d	H	Output Shaft (Note: 2, 3, 7) d1	L1	b1	h1	t1	S1	m1
610□	108	160	134	110	48	9	3	4	11	107	28	35	8	7	4	M8	20
611□	112	210	180	140	58	11	4	6	11	116	32	45	10	8	5	M8	20
612□	117	210	180	140	69	13	4	6	11	137	38	55	10	8	5	M8	20

Model (Note: 5, 6)	Motor [kW]	Motor [P]	Standard L	Standard J	Standard DM	Standard W [kg]	With Brake L	With Brake J	With Brake DM	With Brake W [kg]
CNVM02 - 610□ - (B) - Ratio	0.2	4	336	130	124	16	364	130	124	18
CNVM03 - 610□ - (B) - Ratio	0.25	4	336	130	124	16	364	130	124	18
CNVM05 - 610□ - (B) - Ratio	0.4	4	352	130	124	17	384	130	124	19
CNVM08 - 610□ - (B) - Ratio	0.55	4	393	140	148	21	436	140	148	24
CNVM1 - 610□ - (B) - Ratio	0.75	4	393	140	148	21	436	140	148	24
CNVM1H - 610□ - (B) - Ratio	1.1	4	426	145	160	25	488	145	160	30
CNVM2 - 610□ - (B) - Ratio	1.5	4	426	145	160	25	488	145	160	30
CNVM3 - 610□ - (B) - Ratio	2.2	4	446	152	173	29	509	152	173	35
CNVM05 - 611□ - (B) - Ratio	0.4	4	363	130	124	19	394	130	124	21
CNVM08 - 611□ - (B) - Ratio	0.55	4	403	140	148	22	452	140	148	25
CNVM1 - 611□ - (B) - Ratio	0.75	4	403	140	148	22	452	140	148	25
CNVM1H - 611□ - (B) - Ratio	1.1	4	436	145	160	25	493	145	160	30
CNVM2 - 611□ - (B) - Ratio	1.5	4	436	145	160	25	493	145	160	30
CNVM3 - 611□ - (B) - Ratio	2.2	4	456	152	173	29	519	152	173	35
CNVM4 - 611□ - (B) - Ratio	3.0	4	491	168	212	39	563	168	212	49
CNVM5 - 611□ - (B) - Ratio	3.7	4	491	168	212	39	563	168	212	49
CNVM05 - 612□ - (B) - Ratio	0.4	4	387	130	124	30	419	130	124	31
CNVM08 - 612□ - (B) - Ratio	0.55	4	423	140	148	31	466	140	148	34
CNVM1 - 612□ - (B) - Ratio	0.75	4	423	140	148	31	466	140	148	34
CNVM1H - 612□ - (B) - Ratio	1.1	4	456	145	160	35	518	145	160	40
CNVM2 - 612□ - (B) - Ratio	1.5	4	456	145	160	35	518	145	160	40
CNVM3 - 612□ - (B) - Ratio	2.2	4	476	152	173	39	539	152	173	46
CNVM4 - 612□ - (B) - Ratio	3.0	4	499	168	212	49	571	168	212	59
CNVM5 - 612□ - (B) - Ratio	3.7	4	499	168	212	49	571	168	212	59
CNVM8 - 612□ - (B) - Ratio	5.5	4	543	168	212	56	615	168	212	66

Note: 1. □ indicates motor capacity.
2. Dimension of shaft end diameter: Dimension tolerance conforms to JIS B 0401-1976 "h6."
3. Dimension of shaft end key: Dimension tolerance conforms to JIS B 1301-1996 "Parallel Key."
4. Pilot diameter (ϕD3): Dimension tolerance conforms to JIS B 0401-1976 “f8.”

Dimension Tables Gearmotors (Vertical, Slow Speed Shaft Down, V-Flange Mount)

CVVM□ - 613□ to 614□ (Note: 1)

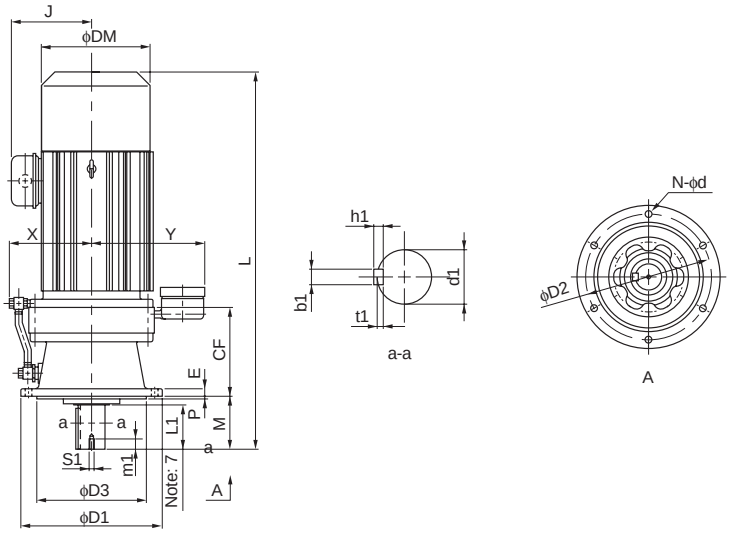

Frame size (Note: 5)	CF	D1	D2	D3	M	E	P	N	d	X	Y	Output Shaft (Note: 2, 3, 7) d1	L1	b1	h1	t1	S1	m1
613□	164	260	230	200	76	15	4	6	11	152	233	50	61	14	9	5.5	M10	18
614□	164	260	230	200	96	15	4	6	11	152	233	50	81	14	9	5.5	M10	18

Model (Note: 5, 6)	Motor [kW]	Motor [P]	Standard L	Standard J	Standard DM	Standard W [kg]	With Brake L	With Brake J	With Brake DM	With Brake W [kg]
CVVM08 - 613□ - (B) - Ratio	0.55	4	477	140	148	51	520	140	148	54
CVVM1 - 613□ - (B) - Ratio	0.75	4	477	140	148	51	520	140	148	54
CVVM1H - 613□ - (B) - Ratio	1.1	4	510	145	160	55	572	145	160	60
CVVM2 - 613□ - (B) - Ratio	1.5	4	510	145	160	55	572	145	160	60
CVVM3 - 613□ - (B) - Ratio	2.2	4	530	152	173	58	593	152	173	65
CVVM4 - 613□ - (B) - Ratio	3.0	4	553	168	212	68	625	168	212	78
CVVM5 - 613□ - (B) - Ratio	3.7	4	553	168	212	68	625	168	212	78
CVVM8 - 613□ - (B) - Ratio	5.5	4	597	168	212	75	669	168	212	85
CVVM10 - 613□ - (B) - Ratio	7.5	4	620	213	251	90	715	213	251	108
CVVM15 - 613□ - (B) - Ratio	11	4	680	213	251	104	775	213	251	121
CVVM1 - 614□ - (B) - Ratio	0.75	4	497	140	148	52	540	140	148	55
CVVM1H - 614□ - (B) - Ratio	1.1	4	530	145	160	56	592	145	160	61
CVVM2 - 614□ - (B) - Ratio	1.5	4	530	145	160	56	592	145	160	61
CVVM3 - 614□ - (B) - Ratio	2.2	4	550	152	173	59	613	152	173	66
CVVM4 - 614□ - (B) - Ratio	3.0	4	573	168	212	69	645	168	212	79
CVVM5 - 614□ - (B) - Ratio	3.7	4	573	168	212	69	645	168	212	79
CVVM8 - 614□ - (B) - Ratio	5.5	4	617	168	212	76	689	168	212	86
CVVM10 - 614□ - (B) - Ratio	7.5	4	640	213	251	91	735	213	251	109
CVVM15 - 614□ - (B) - Ratio	11	4	700	213	251	104	795	213	251	122
CVVM20 - 614□ - (B) - Ratio	15	4	790	261	324	156	895	261	324	190

Note: 5. □ indicates 0 or 5, expressing combination with reduction ratio. Refer to the Selection Table for details.
6. "B" after the frame size indicates models equipped with brake.
7. Dimension of shaft end: Refer to pages F-28 to F-29 for details.
8. Dimensions in above drawings are subject to change without notice.

Dimension Tables Gearmotors (Vertical, Slow Speed Shaft Down, V-Flange Mount)

CVVM□ Note: 1 - 616□ to 617□

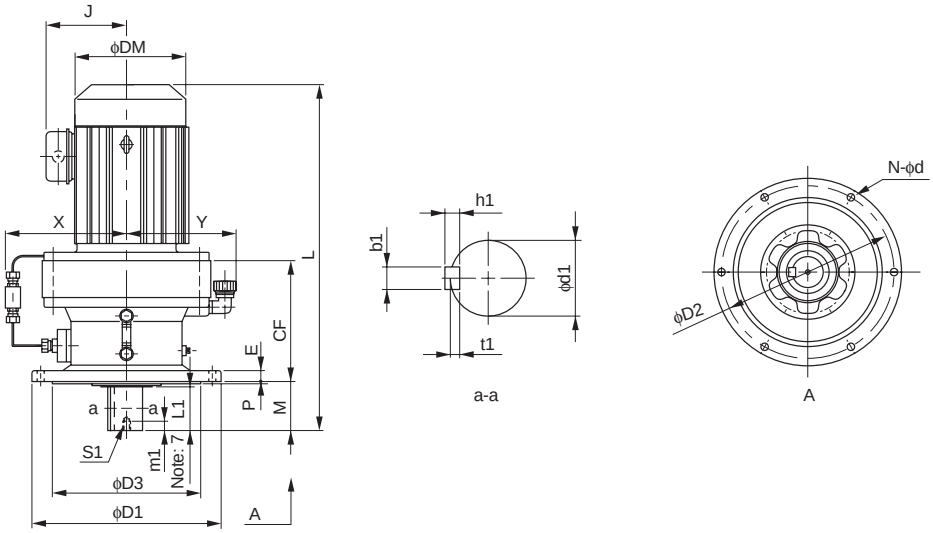

Frame size Note: 5	CF	D1	D2	D3	M	E	P	N	d	X	Y	Output Shaft Note: 2, 3, 7						
												d1	L1	b1	h1	t1	S1	m1
616□	219	340	310	270	89	20	4	6	11	217	200	60	80	18	11	7	M10	18
617□	258	400	360	316	94	22	5	8	14	222	225	70	84	20	12	7.5	M12	24

Model Note: 5, 6	Motor		Standard				With Brake			
	[kW]	[P]	L	J	DM	W [kg]	L	J	DM	W [kg]
CVVM1H - 616□ - (B) - Ratio	1.1	4	583	145	160	89	645	145	160	94
CVVM2 - 616□ - (B) - Ratio	1.5	4	583	145	160	89	645	145	160	94
CVVM3 - 616□ - (B) - Ratio	2.2	4	598	152	173	92	661	152	173	98
CVVM4 - 616□ - (B) - Ratio	3.0	4	621	168	212	101	693	168	212	111
CVVM5 - 616□ - (B) - Ratio	3.7	4	621	168	212	101	693	168	212	111
CVVM8 - 616□ - (B) - Ratio	5.5	4	665	168	212	108	737	168	212	118
CVVM10 - 616□ - (B) - Ratio	7.5	4	693	213	251	124	788	213	251	141
CVVM15 - 616□ - (B) - Ratio	11	4	753	213	251	138	848	213	251	155
CVVM20 - 616□ - (B) - Ratio	15	4	838	261	324	191	943	261	324	225
CVVM25 - 616□ - (B) - Ratio	18.5	4	933	340	394	267	1098	340	394	318
CVVM30 - 616□ - (B) - Ratio	22	4	933	340	394	267	1098	340	394	318
CVVM4 - 617□ - (B) - Ratio	3.0	4	680	168	212	144	752	168	212	154
CVVM5 - 617□ - (B) - Ratio	3.7	4	680	168	212	144	752	168	212	154
CVVM8 - 617□ - (B) - Ratio	5.5	4	724	168	212	151	796	168	212	161
CVVM10 - 617□ - (B) - Ratio	7.5	4	742	213	251	166	837	213	251	184
CVVM15 - 617□ - (B) - Ratio	11	4	802	213	251	180	897	213	251	198
CVVM20 - 617□ - (B) - Ratio	15	4	882	261	324	234	987	261	324	268
CVVM25 - 617□ - (B) - Ratio	18.5	4	977	340	394	306	1142	340	324	357
CVVM30 - 617□ - (B) - Ratio	22	4	977	340	394	306	1142	340	324	357
CVVM40 - 617□ - (B) - Ratio	30	4	977	340	394	323	1142	340	324	366

Note: 1. □ indicates motor capacity.
2. Dimension of shaft end diameter: Dimension tolerance conforms to JIS B 0401-1976 "h6."
3. Dimension of shaft end key: Dimension tolerance conforms to JIS B 1301-1996 "Parallel Key."
4. Pilot diameter (ϕD3): Dimension tolerance conforms to JIS B 0401-1976 “f8.”

Dimension Tables Gearmotors (Vertical, Slow Speed Shaft Down, V-Flange Mount)

CVVM□ - 618□ to 619□ (Note: 1)

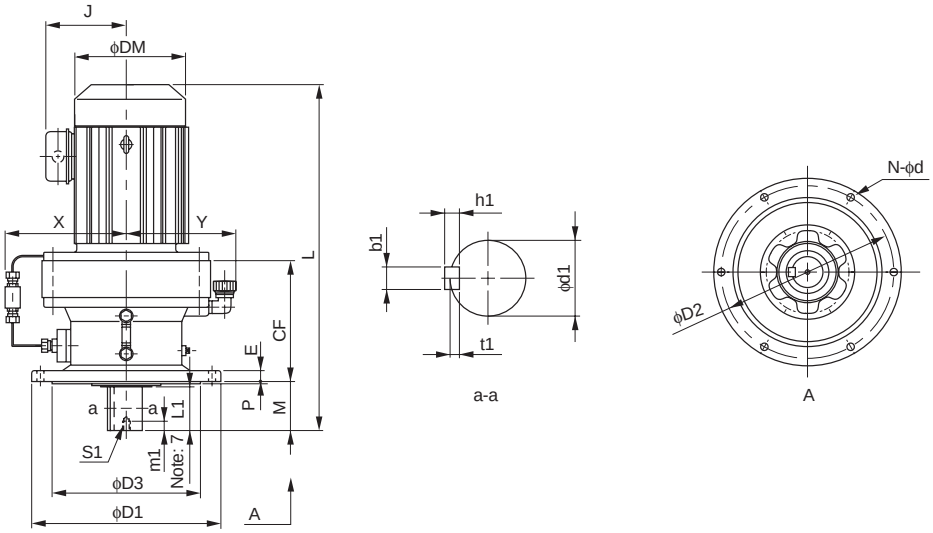

Frame size (Note: 5)	CF	D1	D2	D3	M	E	P	N	d	X	Y	Output Shaft (Note: 2, 3, 7) d1	L1	b1	h1	t1	S1	m1
618□	279	430	390	345	110	22	5	8	18	237	240	80	100	22	14	9	M12	24
619□	320	490	450	400	145	30	6	12	18	265	270	95	125	25	14	9	M20	34

Model (Note: 5, 6)	Motor [kW]	Motor [P]	Standard L	Standard J	Standard DM	Standard W [kg]	With Brake L	With Brake J	With Brake DM	With Brake W [kg]
CVVM4 - 618□ - (B) - Ratio	3.0	4	717	168	212	170	789	168	212	180
CVVM5 - 618□ - (B) - Ratio	3.7	4	717	168	212	170	789	168	212	180
CVVM8 - 618□ - (B) - Ratio	5.5	4	761	168	212	178	833	168	212	188
CVVM10 - 618□ - (B) - Ratio	7.5	4	779	213	251	193	874	213	251	211
CVVM15 - 618□ - (B) - Ratio	11	4	839	213	251	207	934	213	251	225
CVVM20 - 618□ - (B) - Ratio	15	4	919	261	324	267	1024	261	324	296
CVVM25 - 618□ - (B) - Ratio	18.5	4	1014	340	394	333	1179	340	394	384
CVVM30 - 618□ - (B) - Ratio	22	4	1014	340	394	333	1179	340	394	384
CVVM40 - 618□ - (B) - Ratio	30	4	1014	340	394	350	1179	340	394	393
CVVM50 - 618□ - (B) - Ratio	37	4	1129	340	394	398	1344	340	394	495
CVVM60 - 618□ - (B) - Ratio	45	4	1129	340	394	398	1344	340	394	495
CVVM8 - 619□ - (B) - Ratio	5.5	4	857	168	212	250	929	168	212	260
CVVM10 - 619□ - (B) - Ratio	7.5	4	870	213	251	263	965	213	251	281
CVVM15 - 619□ - (B) - Ratio	11	4	930	213	251	277	1025	213	251	295
CVVM20 - 619□ - (B) - Ratio	15	4	995	261	324	330	1100	261	324	365
CVVM25 - 619□ - (B) - Ratio	18.5	4	1090	340	394	408	1255	340	394	453
CVVM256 - 619□ - (B) - Ratio	18.5	6	1090	340	394	421	1255	340	394	466
CVVM30 - 619□ - (B) - Ratio	22	4	1090	340	394	408	1255	340	394	453
CVVM40 - 619□ - (B) - Ratio	30	4	1090	340	394	421	1255	340	394	466
CVVM406 - 619□ - (B) - Ratio	30	6	1205	340	394	459	1420	340	394	556
CVVM50 - 619□ - (B) - Ratio	37	4	1205	340	394	459	1420	340	394	556
CVVM506 - 619□ - (B) - Ratio	37	6	1205	340	394	459	1420	340	394	556
CVVM60 - 619□ - (B) - Ratio	45	4	1205	340	394	459	1420	340	394	556

Note: 5. □ indicates 0 or 5, expressing combination with reduction ratio. Refer to the Selection Table for details.
6. "B" after the frame size indicates models equipped with brake.
7. Dimension of shaft end: Refer to pages F-28 to F-29 for details.
8. Dimensions in above drawings are subject to change without notice.

Dimension Tables Gearmotors (Vertical, Slow Speed Shaft Down, V-Flange Mount)

CVVM□ Note: 1 - 6205 to 6215

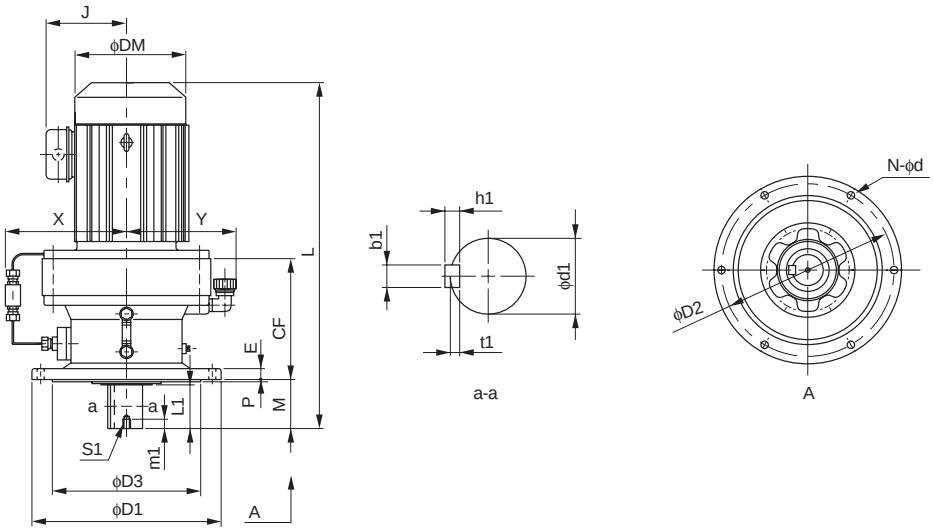

Frame size	CF	D1	D2	D3	M	E	P	N	d	X	Y	Output Shaft Note: 2, 3, 6						
												d1	L1	b1	h1	t1	S1	m1
6205	298	455	405	355	204	30	5	8	22	341	287	100	165	28	16	10	M20	34
6215	323	490	440	390	203	35	7	8	24	348	306	110	165	28	16	10	M20	34

Model Note: 5	Motor		Standard				With Brake			
	[kW]	[P]	L	J	DM	W [kg]	L	J	DM	W [kg]
CVVM15 - 6205 - (B) - Ratio	11	4	972	213	251	299	1067	213	251	317
CVVM20 - 6205 - (B) - Ratio	15	4	1042	261	324	353	1147	261	324	389
CVVM206 - 6205 - (B) - Ratio	15	6	1127	340	394	428	1292	340	394	473
CVVM25 - 6205 - (B) - Ratio	18.5	4	1127	340	394	428	1292	340	394	473
CVVM30 - 6205 - (B) - Ratio	22	4	1127	340	394	428	1292	340	394	473
CVVM306 - 6205 - (B) - Ratio	22	6	1127	340	394	441	1292	340	394	486
CVVM40 - 6205 - (B) - Ratio	30	4	1127	340	394	441	1292	340	394	486
CVVM406 - 6205 - (B) - Ratio	30	6	1242	340	394	479	1457	340	394	573
CVVM50 - 6205 - (B) - Ratio	37	4	1242	340	394	479	1457	340	394	573
CVVM506 - 6205 - (B) - Ratio	37	6	1242	340	394	479	1457	340	394	573
CVVM60 - 6205 - (B) - Ratio	45	4	1242	340	394	479	1457	340	394	573
CVVM606 - 6205 - (B) - Ratio	45	6	1297	390	484	572	-	-	-	-
CVVM75 - 6205 - (B) - Ratio	55	4	1297	390	484	572	-	-	-	-
CVVM15 - 6215 - (B) - Ratio	11	4	996	213	251	377	1091	213	251	395
CVVM20 - 6215 - (B) - Ratio	15	4	1066	261	324	432	1171	261	324	467
CVVM206 - 6215 - (B) - Ratio	15	6	1151	340	394	501	1316	340	394	546
CVVM25 - 6215 - (B) - Ratio	18.5	4	1151	340	394	501	1316	340	394	546
CVVM256 - 6215 - (B) - Ratio	18.5	6	1151	340	394	514	1316	340	394	559
CVVM30 - 6215 - (B) - Ratio	22	4	1151	340	394	501	1316	340	394	546
CVVM306 - 6215 - (B) - Ratio	22	6	1151	340	394	514	1316	340	394	559
CVVM40 - 6215 - (B) - Ratio	30	4	1151	340	394	514	1316	340	394	559
CVVM406 - 6215 - (B) - Ratio	30	6	1266	340	394	569	1481	340	394	664
CVVM50 - 6215 - (B) - Ratio	37	4	1266	340	394	569	1481	340	394	664
CVVM506 - 6215 - (B) - Ratio	37	6	1266	340	394	569	1481	340	394	664
CVVM60 - 6215 - (B) - Ratio	45	4	1266	340	394	569	1481	340	394	664
CVVM606 - 6215 - (B) - Ratio	45	6	1321	390	484	662	-	-	-	-
CVVM75 - 6215 - (B) - Ratio	55	4	1321	390	484	662	-	-	-	-

Note: 1. □ indicates motor capacity.
2. Dimension of shaft end diameter: Dimension tolerance conforms to JIS B 0401-1976 "h6."
3. Dimension of shaft end key: Dimension tolerance conforms to JIS B 1301-1996 "Parallel Key."
4. Pilot diameter (ϕD3): Dimension tolerance conforms to JIS B 0401-1976 “f8.”

Dimension Tables Gearmotors (Vertical, Slow Speed Shaft Down, V-Flange Mount)

CVVM[ ]- 6225 to 6235 (Note: 1)

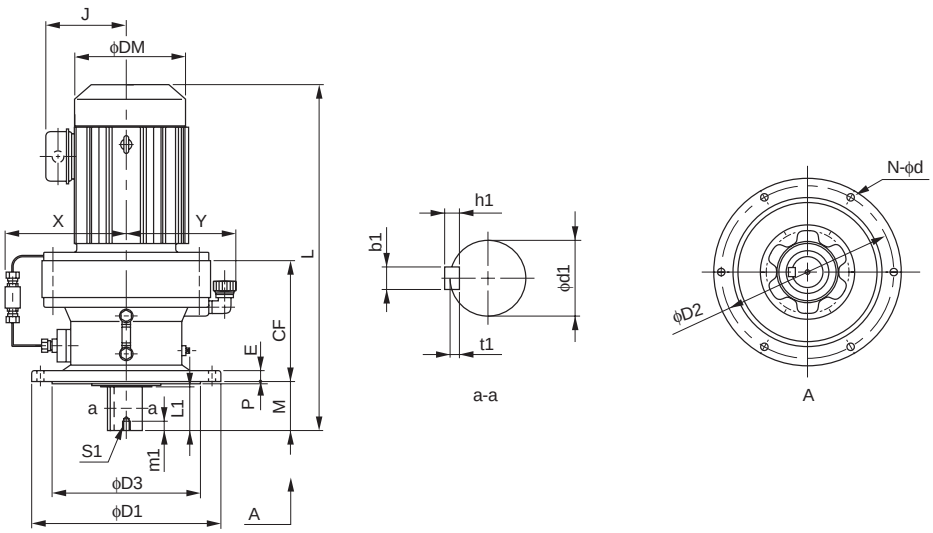

Frame size	CF	D1	D2	D3	M	E	P	N	d	X	Y	Output Shaft (Note: 2, 3, 6) d1	L1	b1	h1	t1	S1	m1
6225	356	535	475	415	210	35	10	8	27	352	326	120	165	32	18	11	M20	34
6235	378	570	510	450	250	40	10	8	27	359	344	130	200	32	18	11	M24	41

Model (Note: 5)	Motor [kW]	Motor [P]	Standard L	Standard J	Standard DM	Standard W [kg]	With Brake L	With Brake J	With Brake DM	With Brake W [kg]
CVVM206 - 6225 - (B) - Ratio	15	6	1191	340	394	593	1356	340	394	638
CVVM25 - 6225 - (B) - Ratio	18.5	4	1191	340	394	593	1356	340	394	638
CVVM256 - 6225 - (B) - Ratio	18.5	6	1191	340	394	606	1356	340	394	651
CVVM30 - 6225 - (B) - Ratio	22	4	1191	340	394	593	1356	340	394	638
CVVM306 - 6225 - (B) - Ratio	22	6	1191	340	394	606	1356	340	394	651
CVVM40 - 6225 - (B) - Ratio	30	4	1191	340	394	606	1356	340	394	651
CVVM406 - 6225 - (B) - Ratio	30	6	1306	340	394	660	1521	340	394	755
CVVM50 - 6225 - (B) - Ratio	37	4	1306	340	394	660	1521	340	394	755
CVVM506 - 6225 - (B) - Ratio	37	6	1306	340	394	660	1521	340	394	755
CVVM60 - 6225 - (B) - Ratio	45	4	1306	340	394	660	1521	340	394	755
CVVM606 - 6225 - (B) - Ratio	45	6	1361	390	484	743	-	-	-	-
CVVM75 - 6225 - (B) - Ratio	55	4	1361	390	484	743	-	-	-	-
CVVM206 - 6235 - (B) - Ratio	15	6	1253	340	394	653	1418	340	394	684
CVVM256 - 6235 - (B) - Ratio	18.5	6	1253	340	394	653	1418	340	394	698
CVVM306 - 6235 - (B) - Ratio	22	6	1253	340	394	653	1418	340	394	698
CVVM406 - 6235 - (B) - Ratio	30	6	1368	340	394	699	1583	340	394	787
CVVM506 - 6235 - (B) - Ratio	37	6	1368	340	394	699	1583	340	394	787
CVVM606 - 6235 - (B) - Ratio	45	6	1423	390	484	788	-	-	-	-
CVVM756 - 6235 - (B) - Ratio	55	6	1503	390	485	842	-	-	-	-

Note: 5. "B" after the frame size indicates models equipped with brake.
6. Dimension of shaft end: Refer to pages F-28 to F-29 for details.
7. Dimensions in above drawings are subject to change without notice.

Dimension Tables Gearmotors (Vertical, Slow Speed Shaft Down, V-Flange Mount)

CVVM□ - 6245 to 6265 (Note: 1)

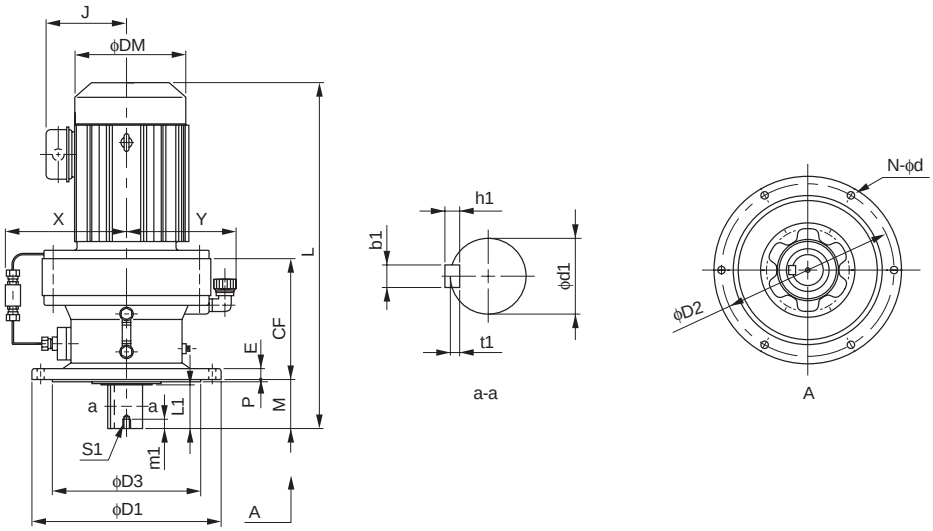

Frame size	CF	D1	D2	D3	M	E	P	N	d	X	Y	Output Shaft (Note: 2, 3, 7)						
												d1	L1	b1	h1	t1	S1	m1
6245	407	635	560	485	250	40	10	8	33	370	371	140	200	36	20	12	M24	41
6255	480	685	610	535	295	45	10	8	33	426	399	160	240	40	22	13	M30	49
6265	532	750	660	570	360	50	10	8	39	460	431	170	300	40	22	13	M30	49

Model (Note: 6)	Motor		Standard				With Brake			
	[kW]	[P]	L	J	DM	W [kg]	L	J	DM	W [kg]
CVVM206 - 6245 - (B) - Ratio	15	6	1282	340	394	759	1447	340	394	792
CVVM256 - 6245 - (B) - Ratio	18.5	6	1282	340	394	759	1447	340	394	806
CVVM306 - 6245 - (B) - Ratio	22	6	1282	340	394	759	1447	340	394	806
CVVM406 - 6245 - (B) - Ratio	30	6	1397	340	394	805	1612	340	394	893
CVVM506 - 6245 - (B) - Ratio	37	6	1397	340	394	805	1612	340	394	893
CVVM606 - 6245 - (B) - Ratio	45	6	1452	390	484	896	-	-	-	-
CVVM756 - 6245 - (B) - Ratio	55	6	1532	390	485	945	-	-	-	-
CVVM206 - 6255 - (B) - Ratio	15	6	1400	340	394	1045	1565	340	394	1123
CVVM256 - 6255 - (B) - Ratio	18.5	6	1400	340	394	1045	1565	340	394	1137
CVVM306 - 6255 - (B) - Ratio	22	6	1400	340	394	1045	1565	340	394	1137
CVVM406 - 6255 - (B) - Ratio	30	6	1515	340	394	1090	1730	340	394	1178
CVVM506 - 6255 - (B) - Ratio	37	6	1515	340	394	1090	1730	340	394	1178
CVVM606 - 6255 - (B) - Ratio	45	6	1570	390	484	1170	-	-	-	-
CVVM756 - 6255 - (B) - Ratio	55	6	1650	390	485	1225	-	-	-	-
CVVM406 - 6265 - (B) - Ratio	22	6	1517	340	394	1350	1727	340	394	1397
CVVM406 - 6265 - (B) - Ratio	30	6	1632	340	394	1395	1847	340	394	1483
CVVM506 - 6265 - (B) - Ratio	37	6	1632	340	394	1395	1847	340	394	1483
CVVM606 - 6265 - (B) - Ratio	45	6	1687	390	484	1490	-	-	-	-

Note: 1. □ indicates motor capacity.
2. Dimension of shaft end diameter: Dimension tolerance conforms to JIS B 0401-1976 "h6."
3. Dimension of shaft end key: Dimension tolerance conforms to JIS B 1301-1996 "Parallel Key."
4. Pilot diameter (ϕD3): Dimension tolerance conforms to JIS B 0401-1976 “f8.”

Dimension Tables Gearmotors (Universal Direction, V-Flange Mount)

CNVM□ (Note: 1) - 606□DA to 612□DB

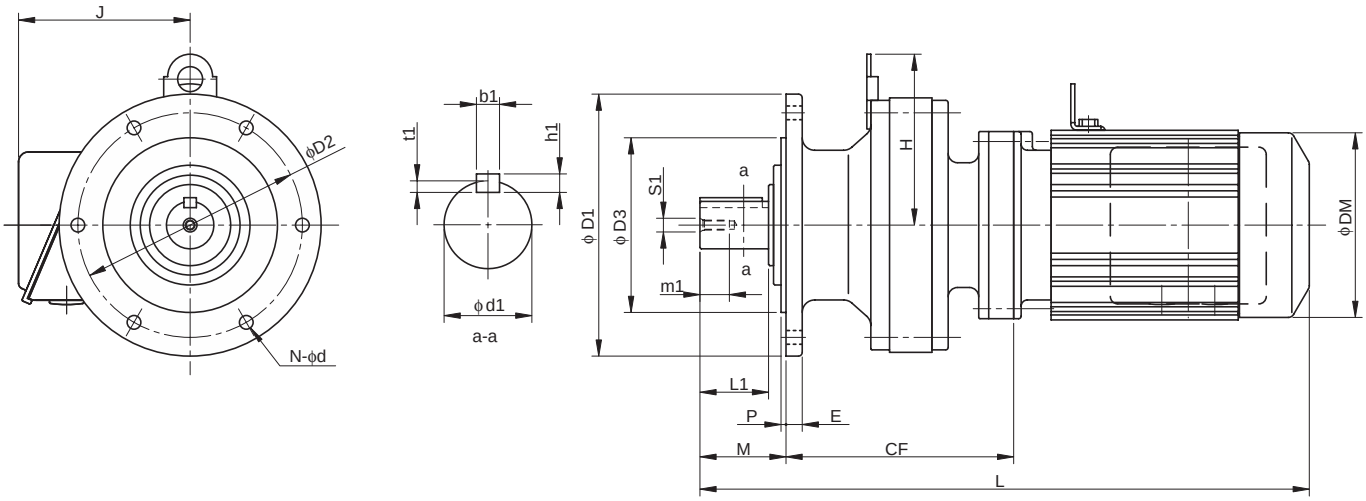

Frame size (Note: 5)	CF	D1	D2	D3	M	E	P	N	d	H	Output Shaft (Note: 2, 3, 7) d1	L1	b1	h1	t1	S1	m1
606□DA	91	120	102	80	34	8	3	6	9	-	14	25	5	5	3	M5	16
607□DA	89	160	134	110	42	9	3	4	11	-	18	30	6	6	3.5	M6	16
609□DA	142	160	134	110	48	9	3	4	11	107	28	35	8	7	4	M8	20
610□DA	156	160	134	110	48	9	3	4	11	107	28	35	8	7	4	M8	20
612□DA	171	210	180	140	69	13	4	6	11	137	38	55	10	8	5	M8	20
612□DB	183	210	180	140	69	13	4	6	11	-	38	55	10	8	5	M8	20

Model (Note: 5, 6)	Motor [kW]	Motor [P]	Standard L	Standard J	Standard DM	Standard W [kg]	With Brake L	With Brake J	With Brake DM	With Brake W [kg]
CNVM01 - 606□DA - (B) - Ratio	0.1	4	287	130	119	9	294	130	124	12
CNVM01 - 607□DA - (B) - Ratio	0.1	4	293	130	119	9	300	130	124	12
CNVM02 - 607□DA - (B) - Ratio	0.2	4	311	130	124	10	339	130	124	13
CNVM01 - 609□DA - (B) - Ratio	0.1	4	352	130	119	16	359	130	124	17
CNVM02 - 609□DA - (B) - Ratio	0.2	4	370	130	124	17	398	130	124	18
CNVM03 - 609□DA - (B) - Ratio	0.25	4	370	130	124	17	398	130	124	18
CNVM05 - 609□DA - (B) - Ratio	0.4	4	386	130	124	18	418	130	124	19
CNVM01 - 610□DA - (B) - Ratio	0.1	4	366	130	119	17	373	130	124	18
CNVM02 - 610□DA - (B) - Ratio	0.2	4	384	130	124	18	412	130	124	19
CNVM03 - 610□DA - (B) - Ratio	0.25	4	384	130	124	18	412	130	124	19
CNVM05 - 610□DA - (B) - Ratio	0.4	4	400	130	124	19	432	130	124	20
CNVM01 - 612□DA - (B) - Ratio	0.1	4	402	130	119	29	409	130	124	30
CNVM02 - 612□DA - (B) - Ratio	0.2	4	420	130	124	30	448	130	124	31
CNVM03 - 612□DA - (B) - Ratio	0.25	4	420	130	124	30	448	130	124	31
CNVM05 - 612□DA - (B) - Ratio	0.4	4	436	130	124	31	468	130	124	32
CNVM01 - 612□DB - (B) - Ratio	0.1	4	414	130	119	32	421	130	124	34
CNVM02 - 612□DB - (B) - Ratio	0.2	4	432	130	124	33	473	130	124	35
CNVM03 - 612□DB - (B) - Ratio	0.25	4	432	130	124	33	473	130	124	35
CNVM05 - 612□DB - (B) - Ratio	0.4	4	448	130	124	34	473	130	124	36
CNVM08 - 612□DB - (B) - Ratio	0.55	4	489	140	148	38	532	140	148	41
CNVM1 - 612□DB - (B) - Ratio	0.75	4	489	140	148	38	532	140	148	41
CNVM1H - 612□DB - (B) - Ratio	1.1	4	516	145	160	42	578	145	160	47
CNVM2 - 612□DB - (B) - Ratio	1.5	4	516	145	160	42	578	145	160	47

Note: 5. □ indicates 0 or 5, expressing combination with reduction ratio. Refer to the Selection Table for details.
6. "B" after the frame size indicates models equipped with brake.
7. Dimension of shaft end: Refer to pages F-28 to F-29 for details.
8. Dimensions in above drawings are subject to change without notice.

Dimension Tables Gearmotors (Vertical, Slow Speed Shaft Down, V-Flange Mount)

CVVM□ Note: 1 - 613□DA to 614□DC

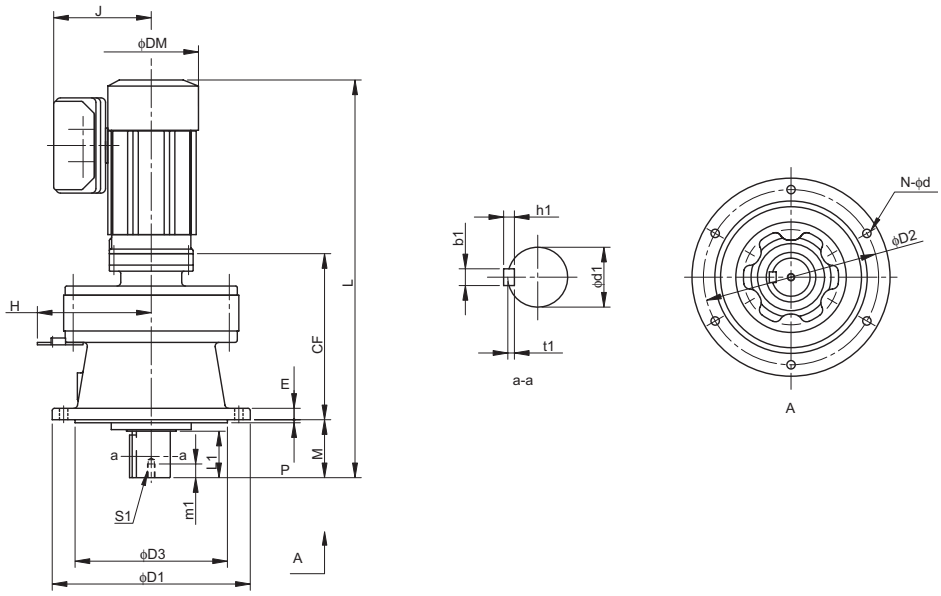

Frame size Note: 5	CF	D1	D2	D3	M	E	P	N	d	H	Output Shaft Note: 2, 3, 7						
											d1	L1	b1	h1	t1	S1	m1
613□DA	218	260	230	200	76	15	4	6	11	150	50	61	14	9	5.5	M10	18
613□DB	227	260	230	200	76	15	4	6	11	150	50	61	14	9	5.5	M10	18
613□DC	241	260	230	200	76	15	4	6	11	-	50	61	14	9	5.5	M10	18
614□DA	218	260	230	200	96	15	4	6	11	150	50	81	14	9	5.5	M10	18
614□DB	227	260	230	200	96	15	4	6	11	150	50	81	14	9	5.5	M10	18
614□DC	241	260	230	200	96	15	4	6	11	-	50	81	14	9	5.5	M10	18

Model Note: 5, 6	Motor		Standard				With Brake			
	[kW]	[P]	L	J	DM	W [kg]	L	J	DM	W [kg]
CVVM02 - 613□DA - (B) - Ratio	0.2	4	474	130	124	45	502	130	124	45
CVVM03 - 613□DA - (B) - Ratio	0.25	4	494	130	124	45	522	130	124	45
CVVM05 - 613□DA - (B) - Ratio	0.4	4	490	130	124	48	522	130	124	49
CVVM02 - 613□DB - (B) - Ratio	0.2	4	483	130	124	48	511	130	124	50
CVVM03 - 613□DB - (B) - Ratio	0.25	4	483	130	124	48	511	130	124	50
CVVM05 - 613□DB - (B) - Ratio	0.4	4	499	130	124	49	531	130	124	51
CVVM08 - 613□DB - (B) - Ratio	0.55	4	540	140	148	53	583	140	148	56
CVVM1 - 613□DB - (B) - Ratio	0.75	4	540	140	148	53	583	140	148	56
CVVM1H - 613□DB - (B) - Ratio	1.1	4	573	145	160	57	635	145	160	62
CVVM2 - 613□DB - (B) - Ratio	1.5	4	573	145	160	57	635	145	160	62
CVVM08 - 613□DC - (B) - Ratio	0.55	4	554	140	148	56	597	140	148	59
CVVM1 - 613□DC - (B) - Ratio	0.75	4	554	140	148	56	597	140	148	59
CVVM2 - 613□DC - (B) - Ratio	1.5	4	587	145	160	60	649	145	160	65
CVVM3 - 613□DC - (B) - Ratio	2.2	4	607	152	173	64	670	152	173	70
CVVM02 - 614□DA - (B) - Ratio	0.2	4	494	123	124	45	522	123	124	46
CVVM03 - 614□DA - (B) - Ratio	0.25	4	494	123	124	45	522	123	124	46
CVVM05 - 614□DA - (B) - Ratio	0.4	4	510	123	124	48	542	123	124	49
CVVM02 - 614□DB - (B) - Ratio	0.2	4	503	123	124	48	531	123	124	50
CVVM03 - 614□DB - (B) - Ratio	0.25	4	503	123	124	48	531	123	124	50
CVVM05 - 614□DB - (B) - Ratio	0.4	4	519	123	124	49	551	123	124	51
CVVM08 - 614□DB - (B) - Ratio	0.55	4	560	140	148	53	603	140	148	56
CVVM1 - 614□DB - (B) - Ratio	0.75	4	560	140	148	53	603	140	148	56
CVVM1H - 614□DB - (B) - Ratio	1.1	4	593	145	160	57	655	145	160	62
CVVM2 - 614□DB - (B) - Ratio	1.5	4	593	145	160	57	655	145	160	62
CVVM08 - 614□DC - (B) - Ratio	0.55	4	574	140	148	54	617	140	148	57
CVVM1 - 614□DC - (B) - Ratio	0.75	4	574	140	148	54	617	140	148	57
CVVM1H - 614□DC - (B) - Ratio	1.1	4	607	145	160	58	669	145	160	63
CVVM2 - 614□DC - (B) - Ratio	1.5	4	607	145	160	58	669	145	160	63
CVVM3 - 614□DC - (B) - Ratio	2.2	4	627	152	173	62	690	152	173	68

Note: 1. □ indicates motor capacity.
2. Dimension of shaft end diameter: Dimension tolerance conforms to JIS B 0401-1976 "h6."
3. Dimension of shaft end key: Dimension tolerance conforms to JIS B 1301-1996 "Parallel Key."
4. Pilot diameter (ϕD3): Dimension tolerance conforms to JIS B 0401-1976 “f8.”

Dimension Tables Gearmotors (Vertical, Slow Speed Shaft Down, V-Flange Mount)

CVVM□ Note: 1 - 616□DA to 618□DA

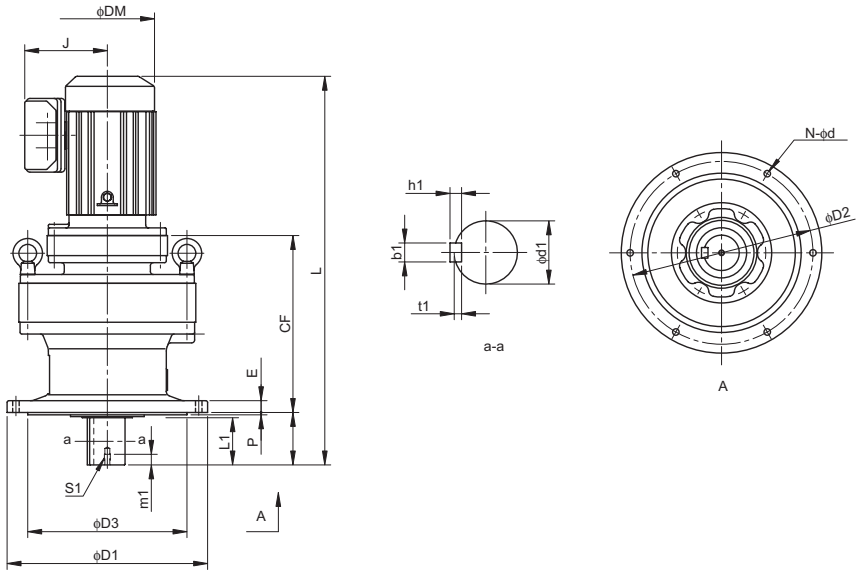

Frame size Note: 5	CF	D1	D2	D3	M	E	P	N	d	H	Output Shaft Note: 2, 3, 7						
											d1	L1	b1	h1	t1	S1	m1
616□DA	285	340	310	270	89	20	4	6	11	-	60	80	18	11	7	M10	18
616□DB	299	340	310	270	89	20	4	6	11	-	60	80	18	11	7	M10	18
617□DA	324	400	360	316	94	22	5	8	14	-	70	84	20	12	7.5	M12	24
617□DB	338	400	360	316	94	22	5	8	14	-	70	84	20	12	7.5	M12	24
618□DA	364	430	390	345	110	22	5	8	18	-	80	100	22	14	9	M12	24

Model Note: 5, 6	Motor		Standard				With Brake			
	[kW]	[P]	L	J	DM	W [kg]	L	J	DM	W [kg]
CVVM02 - 616□DA - (B) - Ratio	0.2	4	554	130	124	84	581	130	124	86
CVVM03 - 616□DA - (B) - Ratio	0.25	4	554	130	124	84	581	130	124	86
CVVM05 - 616□DA - (B) - Ratio	0.4	4	570	130	124	85	601	130	124	87
CVVM08 - 616□DA - (B) - Ratio	0.55	4	611	140	148	89	653	140	148	92
CVVM1 - 616□DA - (B) - Ratio	0.75	4	611	140	148	89	653	140	148	92
CVVM1H - 616□DA - (B) - Ratio	1.1	4	643	145	160	93	705	145	160	98
CVVM2 - 616□DA - (B) - Ratio	1.5	4	643	145	160	93	705	145	160	98
CVVM08 - 616□DB - (B) - Ratio	0.55	4	625	140	148	91	667	140	148	94
CVVM1 - 616□DB - (B) - Ratio	0.75	4	625	140	148	91	667	140	148	94
CVVM1H - 616□DB - (B) - Ratio	1.1	4	658	145	160	95	719	145	160	100
CVVM2 - 616□DB - (B) - Ratio	1.5	4	658	145	160	95	719	145	160	100
CVVM3 - 616□DB - (B) - Ratio	2.2	4	678	152	173	99	740	152	173	105
CVVM02 - 617□DA - (B) - Ratio	0.2	4	598	130	124	120	626	130	124	122
CVVM03 - 617□DA - (B) - Ratio	0.25	4	598	130	124	120	626	130	124	122
CVVM05 - 617□DA - (B) - Ratio	0.4	4	614	130	124	121	646	130	124	123
CVVM08 - 617□DA - (B) - Ratio	0.55	4	655	140	148	125	698	140	148	128
CVVM1 - 617□DA - (B) - Ratio	0.75	4	655	140	148	125	698	140	148	128
CVVM1H - 617□DA - (B) - Ratio	1.1	4	688	145	160	129	750	145	160	134
CVVM2 - 617□DA - (B) - Ratio	1.5	4	688	145	160	129	750	145	160	134
CVVM08 - 617□DB - (B) - Ratio	0.55	4	669	140	148	122	712	140	148	129
CVVM1 - 617□DB - (B) - Ratio	0.75	4	669	140	148	122	712	140	148	129
CVVM1H - 617□DB - (B) - Ratio	1.1	4	702	145	160	131	764	145	160	136
CVVM2 - 617□DB - (B) - Ratio	1.5	4	702	145	160	131	764	145	160	136
CVVM3 - 617□DB - (B) - Ratio	2.2	4	722	152	173	135	785	152	173	141
CVVM05 - 618□DA - (B) - Ratio	0.4	4	670	130	124	154	702	130	124	156
CVVM08 - 618□DA - (B) - Ratio	0.55	4	711	140	148	158	754	140	148	161
CVVM1 - 618□DA - (B) - Ratio	0.75	4	711	140	148	158	754	140	148	161
CVVM1H - 618□DA - (B) - Ratio	1.1	4	744	145	160	162	806	145	160	167
CVVM2 - 618□DA - (B) - Ratio	1.5	4	744	145	160	162	806	145	160	167
CVVM3 - 618□DA - (B) - Ratio	2.2	4	764	152	173	166	827	152	173	172

Note: 5. □ indicates 0 or 5, expressing combination with reduction ratio. Refer to the Selection Table for details.
6. "B" after the frame size indicates models equipped with brake.
7. Dimension of shaft end: Refer to pages F-28 to F-29 for details.
8. Dimensions in above drawings are subject to change without notice.

Dimension Tables Gearmotors (Vertical, Slow Speed Shaft Down, V-Flange Mount)

CVVM□ Note: 1 - 616□DC to 618□DB

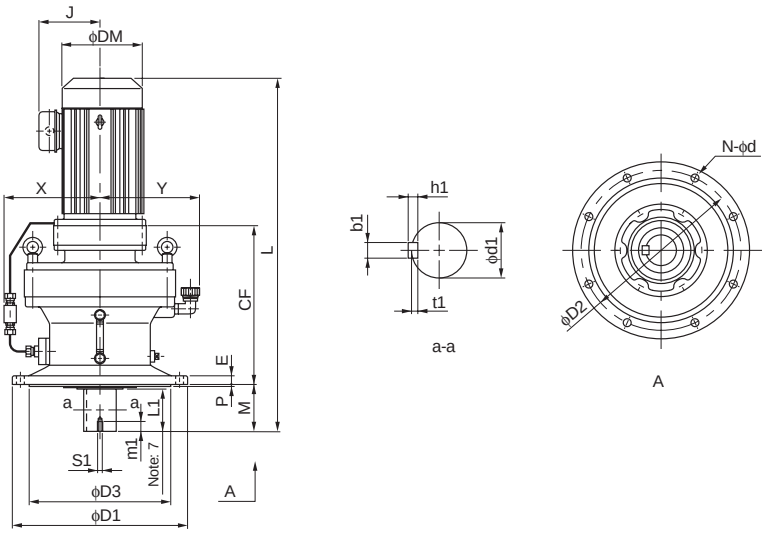

Frame size Note: 5	CF	D1	D2	D3	M	E	P	N	d	X	Y	Output Shaft Note: 2, 3, 7						
												d1	L1	b1	h1	t1	S1	m1
616□DC	300	340	310	270	89	20	4	6	11	196	200	60	80	18	11	7	M10	18
617□DC	342	400	360	316	94	22	5	8	14	218	225	70	84	20	12	7.5	M12	24
618□DB	386	430	390	345	110	22	5	8	18	233	240	80	100	22	14	9	M12	24

Model Note: 5, 6	Motor		Standard				With Brake			
	[kW]	[P]	L	J	DM	W [kg]	L	J	DM	W [kg]
CVVM1H - 616□DC - (B) - Ratio	1.1	4	659	145	160	103	721	145	160	108
CVVM2 - 616□DC - (B) - Ratio	1.5	4	659	145	160	103	721	145	160	108
CVVM3 - 616□DC - (B) - Ratio	2.2	4	679	152	173	107	742	152	173	114
CVVM4 - 616□DC - (B) - Ratio	3.0	4	702	168	212	117	774	168	212	127
CVVM5 - 616□DC - (B) - Ratio	3.7	4	702	168	212	117	774	168	212	127
CVVM8 - 616□DC - (B) - Ratio	5.5	4	746	168	212	127	818	168	212	131
CVVM1H - 617□DC - (B) - Ratio	1.1	4	706	145	160	138	768	145	160	143
CVVM2 - 617□DC - (B) - Ratio	1.5	4	706	145	160	138	768	145	160	143
CVVM3 - 617□DC - (B) - Ratio	2.2	4	726	152	173	142	789	152	173	152
CVVM4 - 617□DC - (B) - Ratio	3.0	4	749	168	212	152	821	168	212	165
CVVM5 - 617□DC - (B) - Ratio	3.7	4	749	168	212	152	821	168	212	165
CVVM8 - 617□DC - (B) - Ratio	5.5	4	793	168	212	162	865	168	212	172
CVVM1H - 618□DB - (B) - Ratio	1.1	4	766	145	160	179	828	145	160	184
CVVM2 - 618□DB - (B) - Ratio	1.5	4	766	145	160	179	828	145	160	184
CVVM3 - 618□DB - (B) - Ratio	2.2	4	786	152	173	183	849	152	173	190
CVVM4 - 618□DB - (B) - Ratio	3.0	4	809	168	212	193	881	168	212	203
CVVM5 - 618□DB - (B) - Ratio	3.7	4	809	168	212	193	881	168	212	203
CVVM8 - 618□DB - (B) - Ratio	5.5	4	853	168	212	200	925	168	212	210
CVVM10 - 618□DB - (B) - Ratio	7.5	4	876	213	251	215	971	213	251	231
CVVM15 - 618□DB - (B) - Ratio	11	4	936	213	251	229	1031	213	251	247

Note: 1. □ indicates motor capacity.
2. Dimension of shaft end diameter: Dimension tolerance conforms to JIS B 0401-1976 "h6."
3. Dimension of shaft end key: Dimension tolerance conforms to JIS B 1301-1996 "Parallel Key."
4. Pilot diameter (ϕD3): Dimension tolerance conforms to JIS B 0401-1976 “f8.”

Dimension Tables Gearmotors (Vertical, Slow Speed Shaft Down, V-Flange Mount)

CVVM□ Note: 1 - 619□DA to 619□DB

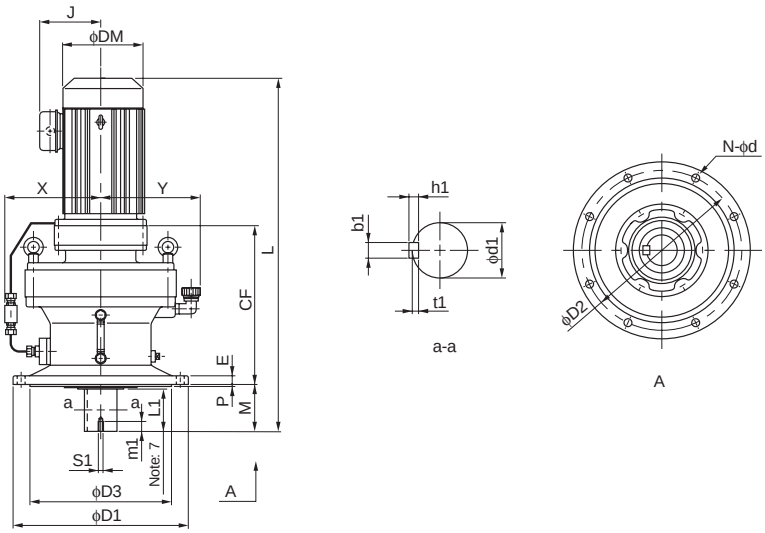

Frame size Note: 5	CF	D1	D2	D3	M	E	P	N	d	X	Y	Output Shaft Note: 2, 3, 7						
												d1	L1	b1	h1	t1	S1	m1
619□DA	411	490	450	400	145	30	6	12	18	255	270	95	125	25	14	9	M20	34
619□DB	427	490	450	400	145	30	6	12	18	255	270	95	125	25	14	9	M20	34

Model Note: 5, 6	Motor		Standard				With Brake			
	[kW]	[P]	L	J	DM	W [kg]	L	J	DM	W [kg]
CVVM1 - 619□DA - (B) - Ratio	0.75	4	793	140	148	238	836	140	148	241
CVVM1H - 619□DA - (B) - Ratio	1.1	4	826	145	160	242	888	145	160	247
CVVM2 - 619□DA - (B) - Ratio	1.5	4	826	145	160	242	888	145	160	247
CVVM3 - 619□DA - (B) - Ratio	2.2	4	846	152	173	246	909	152	173	253
CVVM4 - 619□DA - (B) - Ratio	3.0	4	869	168	212	256	941	168	212	266
CVVM5 - 619□DA - (B) - Ratio	3.7	4	869	168	212	256	941	168	212	266
CVVM8 - 619□DA - (B) - Ratio	5.5	4	913	168	212	263	985	168	212	273
CVVM2 - 619□DB - (B) - Ratio	1.5	4	842	145	160	249	904	145	160	254
CVVM3 - 619□DB - (B) - Ratio	2.2	4	862	152	173	253	925	152	173	260
CVVM4 - 619□DB - (B) - Ratio	3.0	4	885	168	212	263	957	168	212	273
CVVM5 - 619□DB - (B) - Ratio	3.7	4	885	168	212	263	957	168	212	273
CVVM8 - 619□DB - (B) - Ratio	5.5	4	929	168	212	270	1001	168	212	280
CVVM10 - 619□DB - (B) - Ratio	7.5	4	952	213	251	285	1047	213	251	303
CVVM15 - 619□DB - (B) - Ratio	11	4	1012	213	251	299	1107	213	251	317
CVVM20 - 619□DB - (B) - Ratio	15	4	1102	261	324	351	1207	261	324	385

Note: 5. □ indicates 0 or 5, expressing combination with reduction ratio. Refer to the Selection Table for details.
6. "B" after the frame size indicates models equipped with brake.
7. Dimension of shaft end: Refer to pages F-28 to F-29 for details.
8. Dimensions in above drawings are subject to change without notice.

Dimension Tables Gearmotors (Vertical, Slow Speed Shaft Down, V-Flange Mount)

CVVM□ - 6205DA to 6215DA

Note: 1

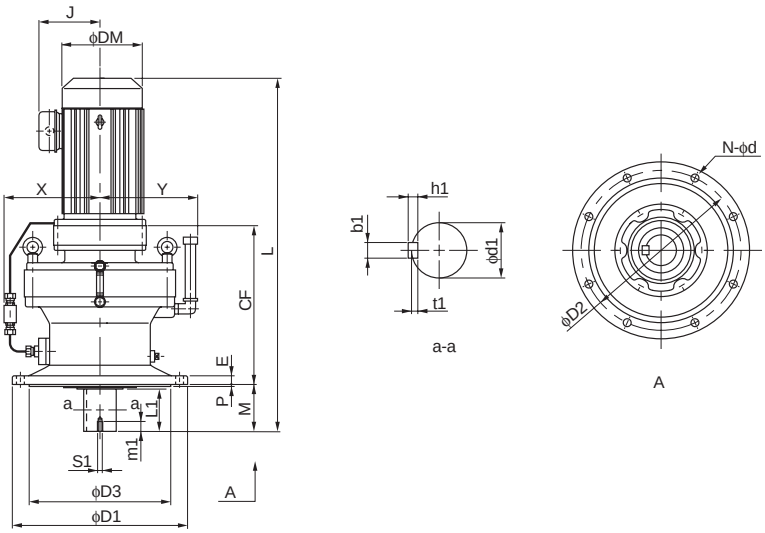

Frame size	CF	D1	D2	D3	M	E	P	N	d	X	Y	Output Shaft Note: 2, 3, 6						
												d1	L1	b1	h1	t1	S1	m1
6205DA	393	455	405	355	204	30	5	8	22	341	287	100	165	28	16	10	M20	34
6205DB	420	455	405	355	204	30	5	8	22	341	287	100	165	28	16	10	M20	34
6215DA	447	490	440	390	203	35	7	8	24	348	306	110	165	28	16	10	M20	34

Model Note: 5	Motor		Standard				With Brake			
	[kW]	[P]	L	J	DM	W [kg]	L	J	DM	W [kg]
CVVM1 - 6205DA - (B) - Ratio	0.75	4	834	140	148	254	877	140	148	257
CVVM2 - 6205DA - (B) - Ratio	1.5	4	867	145	160	257	929	145	160	263
CVVM3 - 6205DA - (B) - Ratio	2.2	4	887	152	173	262	949	152	173	269
CVVM4 - 6205DA - (B) - Ratio	3.0	4	910	168	212	272	982	168	212	282
CVVM5 - 6205DA - (B) - Ratio	3.7	4	910	168	212	272	982	168	212	282
CVVM8 - 6205DA - (B) - Ratio	5.5	4	954	168	212	279	1026	168	212	289
CVVM3 - 6205DB - (B) - Ratio	2.2	4	914	152	173	274	977	152	173	281
CVVM4 - 6205DB - (B) - Ratio	3.0	4	937	168	212	284	1009	168	212	294
CVVM5 - 6205DB - (B) - Ratio	3.7	4	937	168	212	284	1009	168	212	301
CVVM8 - 6205DB - (B) - Ratio	5.5	4	981	168	212	291	1053	168	212	324
CVVM10 - 6205DB - (B) - Ratio	7.5	4	1004	213	251	306	1099	213	251	347
CVVM15 - 6205DB - (B) - Ratio	11	4	1064	213	251	320	1159	213	251	361
CVVM20 - 6205DB - (B) - Ratio	15	4	1154	259	324	372	1249	259	324	429
CVVM2 - 6215DA - (B) - Ratio	1.5	4	920	145	160	331	982	145	160	336
CVVM3 - 6215DA - (B) - Ratio	2.2	4	940	152	173	334	1003	152	173	341
CVVM4 - 6215DA - (B) - Ratio	3.0	4	963	168	212	344	1035	168	212	354
CVVM5 - 6215DA - (B) - Ratio	3.7	4	963	168	212	344	1035	168	212	354
CVVM8 - 6215DA - (B) - Ratio	5.5	4	1007	168	212	351	1079	168	212	361
CVVM10 - 6215DA - (B) - Ratio	7.5	4	1030	213	251	366	1125	213	251	384
CVVM15 - 6215DA - (B) - Ratio	11	4	1090	213	251	380	1185	213	251	398
CVVM20 - 6215DA - (B) - Ratio	15	4	1180	161	324	432	1285	161	324	466

Note: 1. □ indicates motor capacity.
2. Dimension of shaft end diameter: Dimension tolerance conforms to JIS B 0401-1976 "h6."
3. Dimension of shaft end key: Dimension tolerance conforms to JIS B 1301-1996 "Parallel Key."
4. Pilot diameter (ϕD3): Dimension tolerance conforms to JIS B 0401-1976 “f8.”

Dimension Tables Gearmotors (Vertical, Slow Speed Shaft Down, V-Flange Mount)

CVVM□ - 6215DB to 6225DB

Note: 1

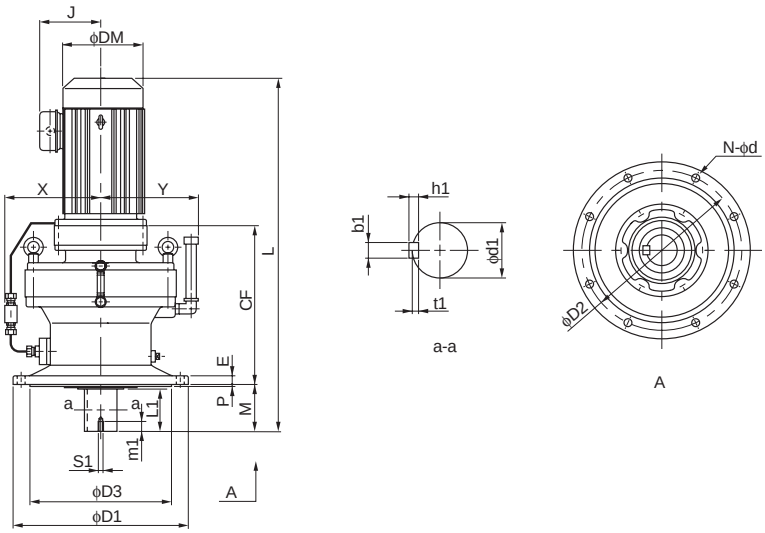

Frame size	CF	D1	D2	D3	M	E	P	N	d	X	Y	Output Shaft Note: 2, 3, 6						
												d1	L1	b1	h1	t1	S1	m1
6215DB	472	490	440	390	203	35	7	8	24	348	306	110	165	28	16	10	M20	34
6225DA	482	535	475	415	210	35	10	8	27	352	326	120	165	32	18	11	M20	34
6225DB	525	535	475	415	210	35	10	8	27	352	326	120	165	32	18	11	M20	34

Model Note: 5	Motor		Standard				With Brake			
	[kW]	[P]	L	J	DM	W [kg]	L	J	DM	W [kg]
CVVM5 - 6215DB - (B) - Ratio	3.7	4	993	168	212	377	1065	168	212	387
CVVM8 - 6215DB - (B) - Ratio	5.5	4	1037	168	212	384	1109	168	212	400
CVVM10 - 6215DB - (B) - Ratio	7.5	4	1060	213	251	400	1155	213	251	417
CVVM15 - 6215DB - (B) - Ratio	11	4	1120	213	251	414	1215	213	251	431
CVVM20 - 6215DB - (B) - Ratio	15	4	1205	261	324	467	1310	261	324	500
CVVM25 - 6215DB - (B) - Ratio	18.5	4	1300	340	394	543	1465	340	394	587
CVVM30 - 6215DB - (B) - Ratio	22	4	1300	340	394	543	1465	340	394	587
CVVM2 - 6225DA - (B) - Ratio	1.5	4	962	145	160	420	1024	145	160	425
CVVM3 - 6225DA - (B) - Ratio	2.2	4	982	152	173	423	1045	152	173	430
CVVM4 - 6225DA - (B) - Ratio	3.0	4	1005	168	212	433	1077	168	212	443
CVVM5 - 6225DA - (B) - Ratio	3.7	4	1005	168	212	433	1077	168	212	443
CVVM8 - 6225DA - (B) - Ratio	5.5	4	1049	168	212	440	1121	168	212	450
CVVM10 - 6225DA - (B) - Ratio	7.5	4	1072	213	251	455	1167	213	251	473
CVVM15 - 6225DA - (B) - Ratio	11	4	1132	213	251	469	1227	213	251	486
CVVM20 - 6225DA - (B) - Ratio	15	4	1222	261	324	521	1327	261	324	554
CVVM5 - 6225DB - (B) - Ratio	3.7	4	1058	168	212	479	1130	168	212	490
CVVM8 - 6225DB - (B) - Ratio	5.5	4	1102	168	212	486	1174	168	212	497
CVVM10 - 6225DB - (B) - Ratio	7.5	4	1125	213	251	501	1220	213	251	519
CVVM15 - 6225DB - (B) - Ratio	11	4	1185	213	251	515	1280	213	251	533
CVVM20 - 6225DB - (B) - Ratio	15	4	1265	261	324	569	1370	261	324	603
CVVM25 - 6225DB - (B) - Ratio	18.5	4	1360	340	394	661	1525	340	394	685
CVVM30 - 6225DB - (B) - Ratio	22	4	1360	340	394	661	1525	340	394	685
CVVM40 - 6225DB - (B) - Ratio	30	4	1360	340	394	678	1525	340	394	721

Note: 5. "B" after the frame size indicates models equipped with brake.
6. Dimension of shaft end: Refer to pages F-28 to F-29 for details.
7. Dimensions in above drawings are subject to change without notice.

Dimension Tables Gearmotors (Vertical, Slow Speed Shaft Down, V-Flange Mount)

CVVM□ - 6235DA to 6245DB

Note: 1

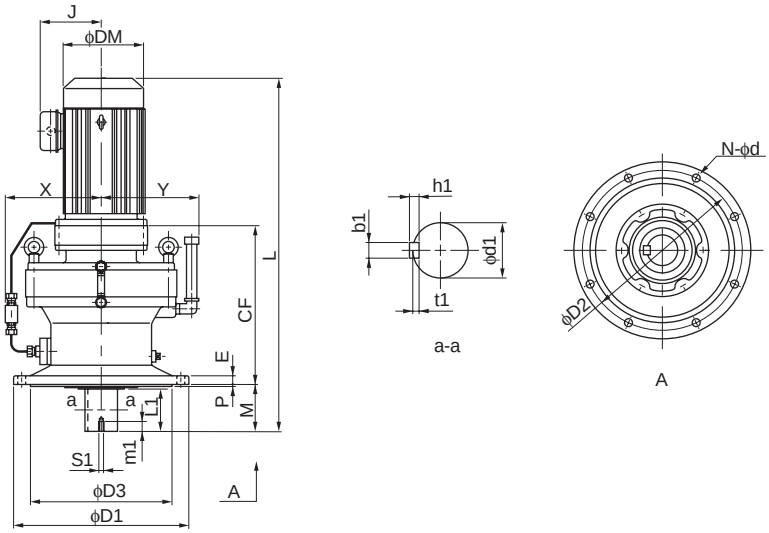

Frame size	CF	D1	D2	D3	M	E	P	N	d	X	Y	Output Shaft Note: 2, 3, 6						
												d1	L1	b1	h1	t1	S1	m1
6235DA	529	570	510	450	250	40	10	8	27	359	344	130	200	32	18	11	M24	41
6235DB	551	570	510	450	250	40	10	8	27	359	344	130	200	32	18	11	M24	41
6245DA	566	635	560	485	250	40	10	8	33	370	371	140	200	36	20	12	M24	41
6245DB	587	635	560	485	250	40	10	8	33	370	371	140	200	36	20	12	M24	41

Model Note: 5	Motor		Standard				With Brake			
	[kW]	[P]	L	J	DM	W [kg]	L	J	DM	W [kg]
CVVM3 - 6235DA - (B) - Ratio	2.2	4	1069	152	173	523	1131	152	173	529
CVVM4 - 6235DA - (B) - Ratio	3.0	4	1091	168	212	532	1163	168	212	542
CVVM5 - 6235DA - (B) - Ratio	3.7	4	1091	168	212	532	1163	168	212	542
CVVM8 - 6235DA - (B) - Ratio	5.5	4	1135	168	212	539	1207	168	212	549
CVVM10 - 6235DA - (B) - Ratio	7.5	4	1163	213	251	555	1258	213	251	572
CVVM15 - 6235DA - (B) - Ratio	11	4	1223	213	251	569	1318	213	251	586
CVVM20 - 6235DA - (B) - Ratio	15	4	1309	261	324	622	1413	261	324	656
CVVM25 - 6235DA - (B) - Ratio	18.5	4	1403	340	394	698	1568	340	394	742
CVVM30 - 6235DA - (B) - Ratio	22	4	1403	340	394	698	1568	340	394	742
CVVM15 - 6235DB - (B) - Ratio	11	4	1245	213	251	601	1340	213	251	619
CVVM20 - 6235DB - (B) - Ratio	15	4	1330	261	324	663	1435	261	324	697
CVVM25 - 6235DB - (B) - Ratio	18.5	4	1425	340	394	730	1590	340	394	781
CVVM30 - 6235DB - (B) - Ratio	22	4	1425	340	394	730	1590	340	394	781
CVVM40 - 6235DB - (B) - Ratio	30	4	1425	340	394	744	1590	340	394	787
CVVM50 - 6235DB - (B) - Ratio	37	4	1540	340	394	792	1755	340	394	889
CVVM3 - 6245DA - (B) - Ratio	2.2	4	1106	152	173	617	1169	152	173	623
CVVM4 - 6245DA - (B) - Ratio	3.0	4	1129	168	212	626	1201	168	212	636
CVVM5 - 6245DA - (B) - Ratio	3.7	4	1129	168	212	626	1201	168	212	636
CVVM8 - 6245DA - (B) - Ratio	5.5	4	1173	168	212	633	1245	168	212	643
CVVM10 - 6245DA - (B) - Ratio	7.5	4	1201	213	251	649	1296	213	251	666
CVVM15 - 6245DA - (B) - Ratio	11	4	1261	213	251	663	1356	213	251	680
CVVM20 - 6245DA - (B) - Ratio	15	4	1346	261	324	716	1451	261	324	750
CVVM25 - 6245DA - (B) - Ratio	18.5	4	1441	340	394	792	1606	340	394	845
CVVM30 - 6245DA - (B) - Ratio	22	4	1441	340	394	792	1606	340	394	845
CVVM15 - 6245DB - (B) - Ratio	11	4	1282	213	251	690	1377	213	251	708
CVVM20 - 6245DB - (B) - Ratio	15	4	1367	261	324	750	1472	261	324	779
CVVM25 - 6245DB - (B) - Ratio	18.5	4	1462	340	394	816	1627	340	394	867
CVVM30 - 6245DB - (B) - Ratio	22	4	1462	340	394	816	1627	340	394	867
CVVM40 - 6245DB - (B) - Ratio	30	4	1462	340	394	833	1627	340	394	876
CVVM50 - 6245DB - (B) - Ratio	37	4	1577	340	394	881	1792	340	394	978

Note: 1. □ indicates motor capacity.
2. Dimension of shaft end diameter: Dimension tolerance conforms to JIS B 0401-1976 "h6."
3. Dimension of shaft end key: Dimension tolerance conforms to JIS B 1301-1996 "Parallel Key."
4. Pilot diameter (ϕD3): Dimension tolerance conforms to JIS B 0401-1976 “f8.”

Dimension Tables Gearmotors (Vertical, Slow Speed Shaft Down, V-Flange Mount)

CVVM□ - 6255DA to 6275DA

Note: 1

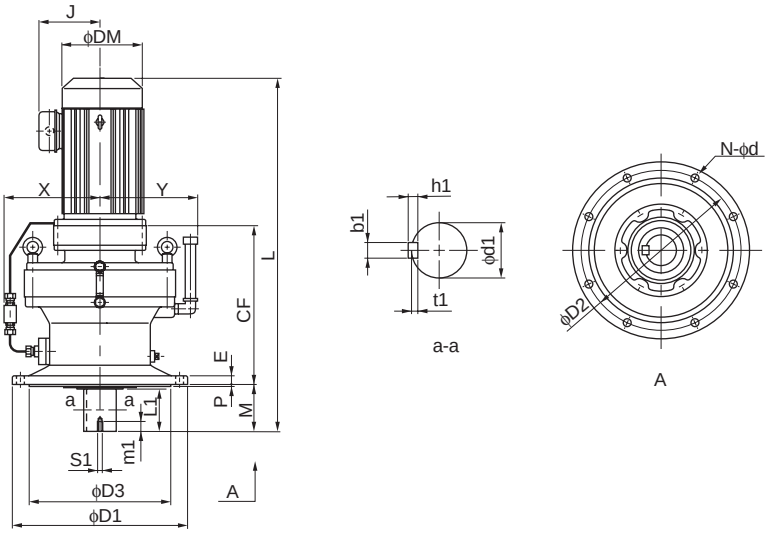

Frame size	CF	D1	D2	D3	M	E	P	N	d	X	Y	Output Shaft Note: 2, 3, 6						
												d1	L1	b1	h1	t1	S1	m1
6255DA	661	685	610	535	295	45	10	8	33	395	399	160	240	40	22	13	M30	49
6255DB	684	685	610	535	295	45	10	8	33	395	399	160	240	40	22	13	M30	49
6265DA	728	750	660	570	360	50	10	8	39	427	431	170	300	40	22	13	M30	49
6275DA	994	1160	1020	900	355	60	10	8	39	610	613	180	320	45	25	15	M30	52

Model Note: 5	Motor		Standard				With Brake			
	[kW]	[P]	L	J	DM	W [kg]	L	J	DM	W [kg]
CVVM5 - 6255DA - (B) - Ratio	3.7	4	1284	168	212	947	1356	168	212	957
CVVM8 - 6255DA - (B) - Ratio	5.5	4	1328	168	212	954	1400	168	212	964
CVVM10 - 6255DA - (B) - Ratio	7.5	4	1346	213	251	969	1441	213	251	984
CVVM15 - 6255DA - (B) - Ratio	11	4	1406	213	251	983	1501	213	251	998
CVVM20 - 6255DA - (B) - Ratio	15	4	1486	261	324	1041	1591	261	324	1077
CVVM25 - 6255DA - (B) - Ratio	18.5	4	1581	340	394	1110	1746	340	394	1161
CVVM30 - 6255DA - (B) - Ratio	22	4	1581	340	394	1110	1746	340	394	1161
CVVM40 - 6255DA - (B) - Ratio	30	4	1581	340	394	1129	1746	340	394	1172
CVVM15 - 6255DB - (B) - Ratio	11	4	1443	213	251	1059	1538	213	251	1074
CVVM20 - 6255DB - (B) - Ratio	15	4	1508	261	324	1109	1613	261	324	1143
CVVM25 - 6255DB - (B) - Ratio	18.5	4	1603	340	394	1185	1768	340	394	1236
CVVM30 - 6255DB - (B) - Ratio	22	4	1603	340	394	1185	1768	340	394	1236
CVVM40 - 6255DB - (B) - Ratio	30	4	1603	340	394	1200	1768	340	394	1243
CVVM50 - 6255DB - (B) - Ratio	37	4	1718	340	394	1238	1928	340	394	1335
CVVM60 - 6255DB - (B) - Ratio	45	4	1718	340	394	1238	1928	340	394	1335
CVVM8 - 6265DA - (B) - Ratio	5.5	4	1480	168	212	1296	1552	168	212	1306
CVVM10 - 6265DA - (B) - Ratio	7.5	4	1493	213	251	1309	1588	213	251	1329
CVVM15 - 6265DA - (B) - Ratio	11	4	1553	213	251	1326	1648	213	251	1341
CVVM20 - 6265DA - (B) - Ratio	15	4	1618	261	324	1376	1723	261	324	1412
CVVM25 - 6265DA - (B) - Ratio	18.5	4	1713	340	394	1455	1878	340	394	1500
CVVM30 - 6265DA - (B) - Ratio	22	4	1713	340	394	1455	1878	340	394	1500
CVVM40 - 6265DA - (B) - Ratio	30	4	1713	340	394	1470	1878	340	394	1513
CVVM50 - 6265DA - (B) - Ratio	37	4	1828	340	394	1505	2043	340	394	1598
CVVM60 - 6265DA - (B) - Ratio	45	4	1828	340	394	1505	2043	340	394	1598
CVVM10 - 6275DA - (B) - Ratio	7.5	4	1754	213	251	2694	1849	213	251	2714
CVVM15 - 6275DA - (B) - Ratio	11	4	1814	213	251	2708	1909	213	251	2723
CVVM20 - 6275DA - (B) - Ratio	15	4	1879	261	324	2761	1984	261	324	2797
CVVM25 - 6275DA - (B) - Ratio	18.5	4	1974	340	394	2840	2139	340	394	2885
CVVM30 - 6275DA - (B) - Ratio	22	4	1974	340	394	2840	2139	340	394	2885
CVVM40 - 6275DA - (B) - Ratio	30	4	1974	340	394	2855	2139	340	394	2898
CVVM50 - 6275DA - (B) - Ratio	37	4	2089	340	394	2890	2304	340	394	2983
CVVM60 - 6275DA - (B) - Ratio	45	4	2089	340	394	2890	2304	340	394	2983

Note: 5. "B" after the frame size indicates models equipped with brake.
6. Dimension of shaft end: Refer to pages F-28 to F-29 for details.
7. Dimensions in above drawings are subject to change without notice.

Dimension Tables Gearmotors (Universal Direction, Foot-Mount)

CNHM□- 610H, 612H (Center Height Option)

Note: 1

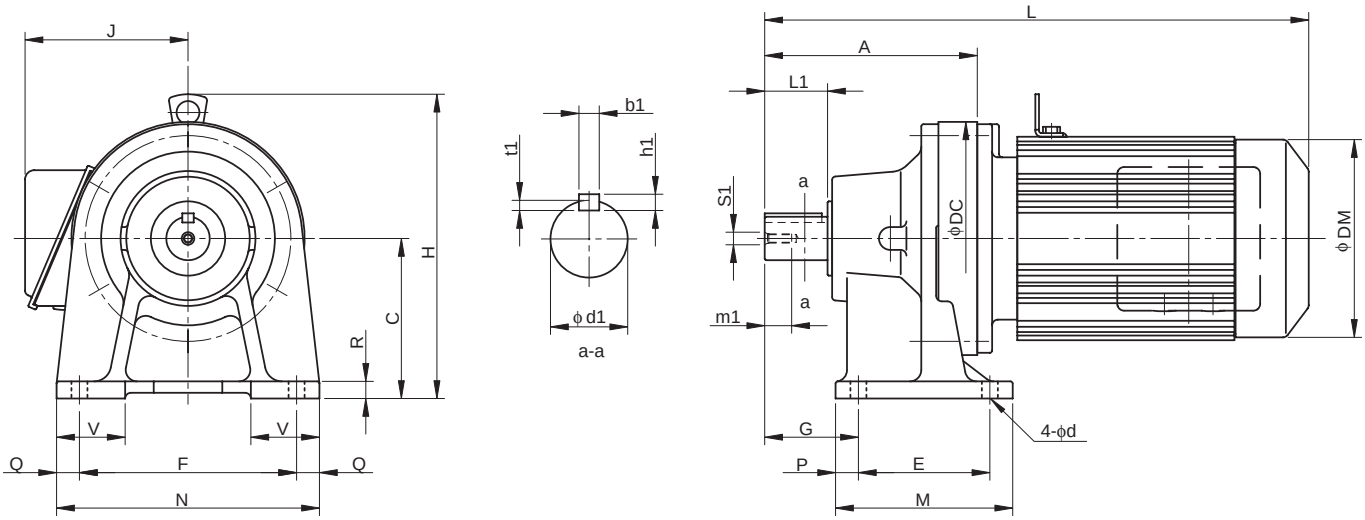

Frame size	A	C	DC	E	F	G	M	N	P	Q	R	V	d	Output Shaft Note: 2, 3, 5						
														d1	L1	b1	h1	t1	S1	m1
610H	156	120	150	90	150	60	135	180	15	15	12	40	11	28	35	8	7	4	M8	20
612H	186	140	204	115	190	82	155	230	20	20	15	60	14	38	55	10	8	5	M8	20

Model Note: 4	Motor		Standard					With Brake				
	[kW]	[P]	L	H	J	DM	W [kg]	L	H	J	DM	W [kg]
CNHM02 - 610H - (B) - Ratio	0.2	4	336	207	130	124	19	364	207	130	124	21
CNHM03 - 610H - (B) - Ratio	0.25	4	336	207	130	124	19	364	207	130	124	21
CNHM05 - 610H - (B) - Ratio	0.4	4	352	207	130	124	20	384	207	130	124	22
CNHM08 - 610H - (B) - Ratio	0.55	4	393	213	140	148	24	436	213	140	148	27
CNHM1 - 610H - (B) - Ratio	0.75	4	393	213	140	148	24	436	213	140	148	27
CNHM1H - 610H - (B) - Ratio	1.1	4	426	220	145	160	28	488	220	145	160	33
CNHM2 - 610H - (B) - Ratio	1.5	4	426	220	145	160	28	488	220	145	160	33
CNHM3 - 610H - (B) - Ratio	2.2	4	446	226	152	173	32	509	226	152	173	38
CNHM05 - 612H - (B) - Ratio	0.4	4	387	257	130	124	31	419	257	130	124	33
CNHM08 - 612H - (B) - Ratio	0.55	4	423	233	140	148	33	466	233	140	148	36
CNHM1 - 612H - (B) - Ratio	0.75	4	423	233	140	148	33	466	233	140	148	36
CNHM1H - 612H - (B) - Ratio	1.1	4	456	240	145	160	37	518	240	145	160	42
CNHM2 - 612H - (B) - Ratio	1.5	4	456	240	145	160	37	518	240	145	160	42
CNHM3 - 612H - (B) - Ratio	2.2	4	476	246	152	173	51	539	246	152	173	48
CNHM4 - 612H - (B) - Ratio	3.0	4	499	266	168	212	51	571	266	168	212	61
CNHM5 - 612H - (B) - Ratio	3.7	4	499	266	168	212	51	571	266	168	212	61
CNHM8 - 612H - (B) - Ratio	5.5	4	543	266	168	212	58	615	266	168	212	68

Note: 1. □ indicates motor capacity.
2. Dimension of shaft end diameter: Dimension tolerance conforms to JIS B 0401-1976 "h6."
3. Dimension of shaft end key: Dimension tolerance conforms to JIS B 1301-1996 "Parallel Key."

Dimension Tables Gearmotors (Horizontal Direction, Foot-Mount)

CHHM□- 614H, 616H (Center Height Option)

Note: 1

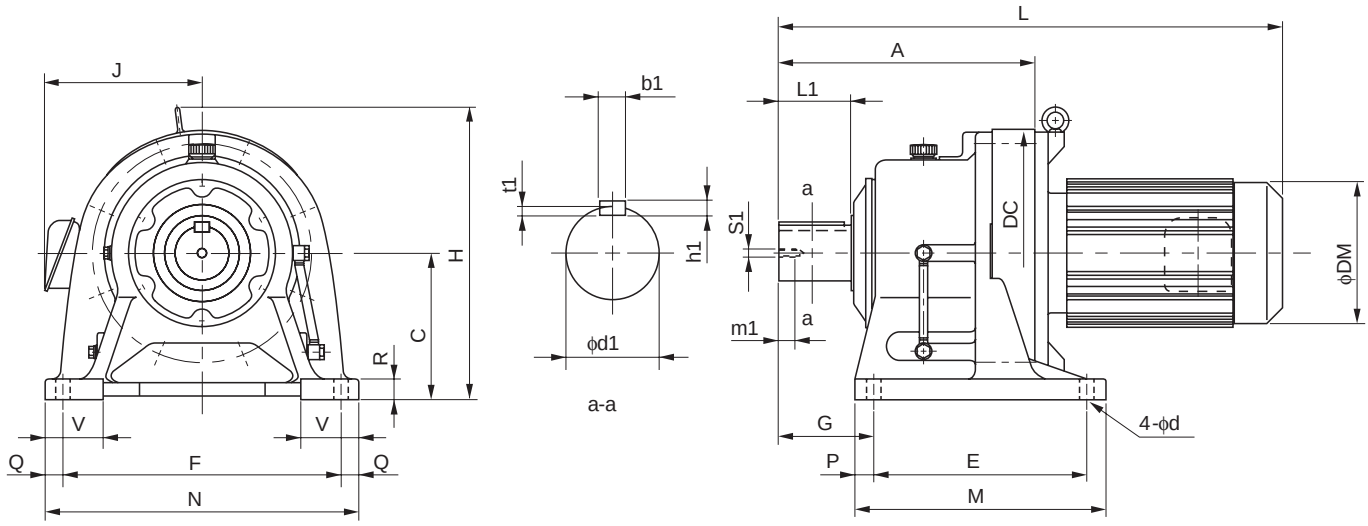

Frame size	A	C	DC	E	F	G	M	N	P	Q	R	V	d	Output Shaft Note: 2, 3, 5						
														d1	L1	b1	h1	t1	S1	m1
614H	260	160	230	145	290	120	195	330	25	20	22	65	18	50	90	14	9	5.5	M10	18
616H	308	200	300	150	370	139	238	410	44	20	25	75	18	60	90	18	11	7	M10	18

Model Note: 4	Motor		Standard					With Brake				
	[kW]	[P]	L	H	J	DM	W [kg]	L	H	J	DM	W [kg]
CHHM1 - 614H - (B) - Ratio	0.75	4	497	268	140	148	52	540	268	140	148	57
CHHM1H - 614H - (B) - Ratio	1.1	4	530	268	145	160	58	592	268	145	160	63
CHHM2 - 614H - (B) - Ratio	1.5	4	530	268	145	160	58	592	268	145	160	63
CHHM3 - 614H - (B) - Ratio	2.2	4	550	274	152	173	61	613	274	152	173	68
CHHM4 - 614H - (B) - Ratio	3.0	4	573	296	168	212	71	645	296	168	212	81
CHHM5 - 614H - (B) - Ratio	3.7	4	573	296	168	212	71	645	296	168	212	81
CHHM8 - 614H - (B) - Ratio	5.5	4	617	296	168	212	78	689	296	168	212	88
CHHM10 - 614H - (B) - Ratio	7.5	4	640	323	213	251	93	735	323	213	251	111
CHHM15 - 614H - (B) - Ratio	11	4	700	323	213	251	107	795	323	213	251	125
*CHHM20 - 614H - (B) - Ratio	15	4	790	358	261	324	159	880	321	261	324	193
CHHM1H - 616H - (B) - Ratio	1.1	4	583	310	145	160	99	645	310	145	160	104
CHHM2 - 616H - (B) - Ratio	1.5	4	583	310	145	160	99	645	310	145	160	104
CHHM3 - 616H - (B) - Ratio	2.2	4	598	310	152	173	102	661	310	152	173	108
CHHM4 - 616H - (B) - Ratio	3.0	4	621	310	168	212	111	693	310	168	212	121
CHHM5 - 616H - (B) - Ratio	3.7	4	621	310	168	212	111	693	310	168	212	121
CHHM8 - 616H - (B) - Ratio	5.5	4	665	310	168	212	118	737	310	168	212	128
CHHM10 - 616H - (B) - Ratio	7.5	4	693	333	213	251	134	788	333	213	251	151
CHHM15 - 616H - (B) - Ratio	11	4	753	333	213	251	148	848	333	213	251	165
CHHM20 - 616H - (B) - Ratio	15	4	838	368	261	324	201	928	368	261	324	235
CHHM25 - 616H - (B) - Ratio	18.5	4	933	368	340	394	277	1098	368	340	394	328
CHHM30 - 616H - (B) - Ratio	22	4	933	368	340	394	277	1098	368	340	394	328

"*" indicates models with bottom level of the motor lower than the reducer base.

Note: 4. "B" after the frame size indicates models equipped with brake.
5. Dimension of shaft end: Refer to pages F-28 to F-29 for details.
6. Dimensions in above drawings are subject to change without notice.

MEMO

C

REDUCERS

CYCLO® SPEED REDUCERS

	Page
1. How to Select	
Standard Specifications	C-3
Model Selection	C-4
Selection of Load Factor	C-7
Nomenclature	C-9
2. Selection Tables	C-11
3. Dimension Tables	C-69

C CYCLO® SPEED REDUCERS

2. Selection Tables

Selection Tables 6000SK Series Reducer

Nominal Reduction Ratio 2.5 ~ 10 Frame Size: 6070SK ~ 6115SK

Input Speed	n_1 = 50 / 580 r/min	n_1: Input Speed [r/min]	T_{out}: Allowable output torque [N·m, kgf·m]
		n_2: Output Speed [r/min]	Pro: Allowable output shaft radial load [N, kgf]
		P_1: Allowable input power [kW]	*Consult us for Pro of CNF and CHF type.

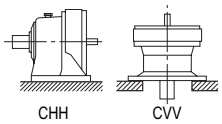

Frame Size	n_1 [r/min]	50							580							Page of Dim.
	n_2 [r/min]	20.0	16.7	12.5	10.0	8.33	6.25	5.00	232	193	145	116	96.7	72.5	58.0	
	Ratio[Z]	2.5	3	4	5	6	8	10	2.5	3	4	5	6	8	10	
6070SK	P_1[kW]	-	-	-	-	-	-	-	0.507	0.479	0.385	0.388	0.339	0.254	0.195	
	T_{OUT}[N•m]	29.4	30.5	24.1	44.8	46.6	45.8	47.4	19.8	22.5	24.1	30.3	31.8	31.7	30.5	CHH C-70
	T_{OUT}[kgf•m]	2.99	3.10	2.46	4.56	4.75	4.67	4.83	2.02	2.29	2.46	3.09	3.24	3.23	3.11	
	Pro[N]	1770	1770	1770	1770	1770	1770	1770	1490	1550	1730	1770	1770	1770	1770	CVV C-81
	Pro[kgf]	180	180	180	180	180	180	180	152	158	176	180	180	180	180	
6075SK	P_1[kW]	-	-	-	-	-	-	-	0.634	0.599	0.482	0.485	0.424	0.317	0.244	
	T_{OUT}[N•m]	36.7	38.1	30.1	56.0	58.3	57.3	59.3	24.8	28.1	30.1	37.9	39.8	39.7	38.1	CHH C-70
	T_{OUT}[kgf•m]	3.74	3.88	3.07	5.70	5.94	5.84	6.04	2.53	2.87	3.07	3.87	4.05	4.04	3.88	
	Pro[N]	1770	1770	1770	1770	1770	1770	1770	1430	1490	1660	1770	1770	1770	1770	CVV C-81
	Pro[kgf]	180	180	180	180	180	180	180	146	152	169	180	180	180	180	
6080SK	P_1[kW]	-	-	-	-	-	-	-	0.784	0.822	0.895	0.748	0.632	0.495	0.379	
	T_{OUT}[N•m]	41.0	44.5	67.1	73.4	63.8	65.8	72.6	30.7	38.6	56.0	58.5	59.3	61.9	59.2	CHH C-70
	T_{OUT}[kgf•m]	4.17	4.54	6.84	7.49	6.50	6.70	7.40	3.12	3.93	5.71	5.97	6.04	6.31	6.04	
	Pro[N]	2560	2560	2560	2560	2560	2560	2560	1570	1620	1690	1860	1990	2200	2440	CVV C-81
	Pro[kgf]	261	261	261	261	261	261	261	160	165	172	190	203	224	249	
6085SK	P_1[kW]	-	-	-	-	-	-	-	0.981	1.03	1.12	0.879	0.790	0.618	0.473	
	T_{OUT}[N•m]	44.2	55.7	83.9	86.2	79.8	82.2	90.8	38.4	48.3	70.0	68.7	74.2	77.4	74.0	CHH C-70
	T_{OUT}[kgf•m]	4.51	5.67	8.56	8.79	8.14	8.38	9.25	3.91	4.92	7.13	7.00	7.56	7.89	7.55	
	Pro[N]	2560	2560	2560	2560	2560	2560	2560	1490	1530	1560	1770	1840	2060	2320	CVV C-81
	Pro[kgf]	261	261	261	261	261	261	261	152	156	159	180	188	210	236	
6090SK	P_1[kW]	-	-	-	-	-	-	-	1.15	1.11	1.12	1.06	0.883	0.691	0.645	
	T_{OUT}[N•m]	55.4	63.3	84.4	101	98.7	104	121	44.9	52.0	70.2	82.9	82.9	86.5	101	CHH C-70
	T_{OUT}[kgf•m]	5.65	6.46	8.61	10.3	10.1	10.6	12.3	4.58	5.30	7.16	8.45	8.45	8.81	10.3	
	Pro[N]	3340	3340	3340	3340	3340	3340	3340	2800	2900	3160	3340	3340	3340	3340	CVV C-81
	Pro[kgf]	340	340	340	340	340	340	340	285	296	322	340	340	340	340	
6095SK	P_1[kW]	-	-	-	-	-	-	-	1.30	1.25	1.25	1.25	1.05	0.814	0.814	
	T_{OUT}[N•m]	62.6	71.3	95.1	119	117	122	153	50.7	58.5	78.0	97.5	98.6	102	127	CHH C-70
	T_{OUT}[kgf•m]	6.38	7.27	9.70	12.1	12.0	12.5	15.6	5.17	5.97	7.95	9.94	10.0	10.4	13.0	
	Pro[N]	3340	3340	3340	3340	3340	3340	3340	2740	2840	3080	3220	3340	3340	3340	CVV C-81
	Pro[kgf]	340	340	340	340	340	340	340	279	289	314	328	340	340	340	
6100SK	P_1[kW]	-	-	-	-	-	-	-	1.35	1.32	1.29	1.28	1.07	0.848	0.891	
	T_{OUT}[N•m]	66.5	79.7	107	133	119	126	156	52.8	61.9	80.6	99.7	101	106	139	CHH C-70
	T_{OUT}[kgf•m]	6.78	8.12	11.0	13.6	12.2	12.8	15.9	5.38	6.31	8.22	10.2	10.3	10.8	14.2	
	Pro[N]	5400	5400	5400	5400	5400	5400	5400	2720	2810	3060	3200	3370	3710	3890	CVV C-81
	Pro[kgf]	550	550	550	550	550	550	550	277	286	312	326	344	378	397	
6105SK	P_1[kW]	-	-	-	-	-	-	-	1.50	1.55	1.52	1.50	1.26	0.996	0.990	
	T_{OUT}[N•m]	78.2	93.7	126	156	136	127	159	58.7	72.8	94.9	117	118	125	155	CHH C-70
	T_{OUT}[kgf•m]	7.97	9.55	12.9	15.9	13.8	13.0	16.3	5.98	7.42	9.67	11.9	12.1	12.7	15.8	
	Pro[N]	5400	5400	5400	5400	5400	5400	5400	2650	2700	2920	3030	3220	3500	3760	CVV C-81
	Pro[kgf]	550	550	550	550	550	550	550	270	275	298	309	328	357	383	
6110SK	P_1[kW]	-	-	-	-	-	-	-	2.52	2.52	2.50	2.30	2.05	1.58	1.32	
	T_{OUT}[N•m]	98.4	118	157	195	195	197	249	98.4	118	157	180	192	197	207	CHH C-70
	T_{OUT}[kgf•m]	10.0	12.0	16.0	19.9	19.9	20.1	25.4	10.0	12.0	16.0	18.3	19.6	20.1	21.1	
	Pro[N]	7610	7610	7610	7610	7610	7610	7610	3470	3650	3840	4060	4370	4920	5420	CVV C-81
	Pro[kgf]	776	776	776	776	776	776	776	354	372	391	414	445	502	552	
6115SK	P_1[kW]	-	-	-	-	-	-	-	3.15	3.15	3.13	2.88	2.56	1.97	1.65	
	T_{OUT}[N•m]	123	148	196	244	244	247	311	123	148	196	225	241	247	259	CHH C-70
	T_{OUT}[kgf•m]	12.5	15.0	20.0	24.9	24.9	25.2	31.7	12.5	15.0	20.0	22.9	24.5	25.2	26.4	
	Pro[N]	7610	7610	7610	7610	7610	7610	7610	3260	3400	3540	3740	4000	4570	5040	CVV C-81
	Pro[kgf]	776	776	776	776	776	776	776	332	347	361	381	408	466	514	
Frame Size	Ratio[Z]	2.5	3	4	5	6	8	10	2.5	3	4	5	6	8	10	Page of Dim.
	n_2 [r/min]	20.0	16.7	12.5	10.0	8.33	6.25	5.00	232	193	145	116	96.7	72.5	58.0	
	n_1 [r/min]	50							580							

Note: 1. Reduction ratio in the selection table is "nominal ratio." Refer to "6000 SK Series (Actual Reduction Ratio)" in page A-4 for actual reduction ratio.
2. Allowable radial load Pro is the value at the midpoint of the output shaft. Refer to pages F-11~12 when radial load is off the midpoint of output shaft and for checking thrust load.
3. Refer to pages F-15~16 for allowable radial load for input shaft.

Selection Tables 6000SK Series Reducer

Nominal Reduction Ratio 2.5 ~ 10 Frame Size: 6070SK ~ 6115SK

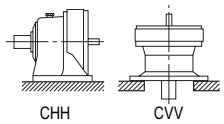

n_1: Input Speed [r/min]
n_2: Output Speed [r/min]
P_1: Allowable input power [kW]
T_{out}: Allowable output torque [N·m, kgf·m]
Pro: Allowable output shaft radial load [N, kgf]
*Consult us for Pro of CNF and CHF type.

Input Speed n_1 = 720 / 870 r/min

Frame Size	n_1 [r/min]	720							870							Page of Dim.
	n_2 [r/min]	288	240	180	144	120	90.0	72.0	348	290	218	174	145	109	87.0	
	Ratio[Z]	2.5	3	4	5	6	8	10	2.5	3	4	5	6	8	10	
6070SK	P_1[kW]	0.614	0.581	0.478	0.473	0.414	0.310	0.238	0.723	0.686	0.578	0.563	0.492	0.369	0.284	
	T_{OUT}[N•m]	19.3	22.0	24.1	29.8	31.3	31.2	30.0	18.9	21.5	24.1	29.3	30.8	30.8	29.6	CHH C-70
	T_{OUT}[kgf•m]	1.97	2.24	2.46	3.04	3.19	3.18	3.06	1.92	2.19	2.46	2.99	3.14	3.14	3.02	
	Pro[N]	1370	1430	1590	1730	1770	1770	1770	1290	1330	1470	1600	1700	1770	1770	CVV C-81
	Pro[kgf]	140	146	162	176	180	180	180	131	136	150	163	173	180	180	
6075SK	P_1[kW]	0.767	0.726	0.598	0.591	0.517	0.387	0.298	0.904	0.857	0.723	0.703	0.615	0.461	0.355	
	T_{OUT}[N•m]	24.2	27.5	30.1	37.3	39.1	39.0	37.5	23.6	26.8	30.1	36.7	38.5	38.5	37.0	CHH C-70
	T_{OUT}[kgf•m]	2.46	2.80	3.07	3.80	3.98	3.98	3.82	2.40	2.73	3.07	3.74	3.92	3.92	3.77	
	Pro[N]	1320	1370	1520	1650	1750	1770	1770	1230	1290	1410	1530	1620	1770	1770	CVV C-81
	Pro[kgf]	135	140	155	168	178	180	180	125	131	144	156	165	180	180	
6080SK	P_1[kW]	0.935	0.981	1.03	0.912	0.771	0.604	0.463	1.09	1.14	1.17	1.08	0.917	0.719	0.551	
	T_{OUT}[N•m]	29.5	37.1	52.1	57.5	58.3	60.9	58.3	28.4	35.8	48.9	56.6	57.4	60.0	57.4	CHH C-70
	T_{OUT}[kgf•m]	3.00	3.78	5.31	5.86	5.94	6.20	5.94	2.90	3.65	4.98	5.76	5.85	6.11	5.85	
	Pro[N]	1450	1500	1570	1710	1810	2010	2250	1350	1390	1470	1580	1690	1860	2080	CVV C-81
	Pro[kgf]	148	153	160	174	185	205	229	138	142	150	161	172	190	212	
6085SK	P_1[kW]	1.17	1.23	1.29	1.07	0.964	0.755	0.578	1.36	1.43	1.47	1.27	1.15	0.899	0.688	
	T_{OUT}[N•m]	36.9	46.4	65.1	67.5	72.9	76.1	72.9	35.6	44.7	61.1	66.4	71.8	75.0	71.8	CHH C-70
	T_{OUT}[kgf•m]	3.76	4.73	6.64	6.88	7.43	7.76	7.43	3.62	4.56	6.23	6.77	7.32	7.64	7.32	
	Pro[N]	1380	1410	1450	1610	1690	1880	2120	1290	1310	1360	1490	1550	1740	1960	CVV C-81
	Pro[kgf]	141	144	148	164	172	192	216	131	134	139	152	158	177	200	
6090SK	P_1[kW]	1.38	1.33	1.33	1.27	1.07	0.834	0.778	1.61	1.56	1.56	1.49	1.25	0.980	0.915	
	T_{OUT}[N•m]	43.4	50.3	67.1	80.3	80.6	84.0	98.0	42.0	48.8	65.0	77.8	78.4	81.8	95.4	CHH C-70
	T_{OUT}[kgf•m]	4.42	5.13	6.84	8.18	8.22	8.57	10.0	4.28	4.97	6.63	7.93	7.99	8.34	9.73	
	Pro[N]	2580	2680	2920	3090	3260	3340	3340	2410	2500	2730	2870	3030	3340	3340	CVV C-81
	Pro[kgf]	263	273	298	315	332	340	340	246	255	278	293	309	340	340	
6095SK	P_1[kW]	1.56	1.50	1.50	1.50	1.27	0.983	0.983	1.82	1.76	1.76	1.76	1.49	1.16	1.16	
	T_{OUT}[N•m]	49.0	56.7	75.6	94.5	95.9	99.1	124	47.4	54.9	73.2	91.5	93.3	96.4	121	CHH C-70
	T_{OUT}[kgf•m]	4.99	5.78	7.70	9.63	9.77	10.1	12.6	4.83	5.60	7.46	9.33	9.51	9.83	12.3	
	Pro[N]	2520	2620	2840	2960	3120	3340	3340	2350	2440	2650	2750	2900	3200	3340	CVV C-81
	Pro[kgf]	257	267	290	302	318	340	340	240	249	270	280	296	326	340	
6100SK	P_1[kW]	1.68	1.64	1.60	1.58	1.33	1.05	1.11	1.91	1.98	1.93	1.91	1.61	1.27	1.34	
	T_{OUT}[N•m]	52.8	61.9	80.6	99.7	101	106	139	49.9	61.9	80.6	99.7	101	106	139	CHH C-70
	T_{OUT}[kgf•m]	5.38	6.31	8.22	10.2	10.3	10.8	14.2	5.09	6.31	8.22	10.2	10.3	10.8	14.2	
	Pro[N]	2480	2560	2800	2910	3080	3360	3540	2330	2370	2570	2680	2840	3090	3240	CVV C-81
	Pro[kgf]	253	261	285	297	314	343	361	238	242	262	273	289	315	330	
6105SK	P_1[kW]	1.86	1.93	1.88	1.86	1.56	1.24	1.23	2.25	2.33	2.27	2.25	1.89	1.49	1.48	
	T_{OUT}[N•m]	58.7	72.8	94.9	117	118	125	155	58.7	72.8	94.9	117	118	125	155	CHH C-70
	T_{OUT}[kgf•m]	5.98	7.42	9.67	11.9	12.1	12.7	15.8	5.98	7.42	9.67	11.9	12.1	12.7	15.8	
	Pro[N]	2420	2450	2650	2750	2910	3170	3390	2240	2260	2430	2510	2680	2880	3100	CVV C-81
	Pro[kgf]	247	250	270	280	297	323	346	228	230	248	256	273	294	316	
6110SK	P_1[kW]	3.12	3.12	3.11	2.75	2.47	1.96	1.61	3.66	3.76	3.75	3.20	2.89	2.37	1.92	
	T_{OUT}[N•m]	98.4	118	157	173	187	197	203	95.5	118	157	167	181	197	200	CHH C-70
	T_{OUT}[kgf•m]	10.0	12.0	16.0	17.7	19.0	20.1	20.7	9.74	12.0	16.0	17.0	18.4	20.1	20.4	
	Pro[N]	3170	3330	3490	3740	4000	4480	4960	2940	3070	3210	3470	3720	4120	4590	CVV C-81
	Pro[kgf]	323	339	356	381	408	457	506	300	313	327	354	379	420	468	
6115SK	P_1[kW]	3.91	3.90	3.88	3.44	3.09	2.45	2.02	4.58	4.70	4.69	4.00	3.61	2.96	2.40	
	T_{OUT}[N•m]	123	148	196	217	233	247	254	119	147	196	209	226	247	250	CHH C-70
	T_{OUT}[kgf•m]	12.5	15.0	20.0	22.1	23.8	25.2	25.9	12.2	15.0	20.0	21.3	23.0	25.2	25.5	
	Pro[N]	2950	3080	3200	3420	3650	4130	4600	2740	2830	2910	3180	3370	3770	4230	CVV C-81
	Pro[kgf]	301	314	326	349	372	421	469	279	288	297	324	344	384	431	
Frame Size	Ratio[Z]	2.5	3	4	5	6	8	10	2.5	3	4	5	6	8	10	Page of Dim.
	n_2 [r/min]	288	240	180	144	120	90.0	72.0	348	290	218	174	145	109	87.0	
	n_1 [r/min]	720							870							

Note: 1. Reduction ratio in the selection table is "nominal ratio." Refer to "6000 SK Series (Actual Reduction Ratio)" in page A-4 for actual reduction ratio.
2. Allowable radial load Pro is the value at the midpoint of the output shaft. Refer to pages F-11~12 when radial load is off the midpoint of output shaft and for checking thrust load.
3. Refer to pages F-15~16 for allowable radial load for input shaft.

Selection Tables 6000SK Series Reducer

Nominal Reduction Ratio 2.5 ~ 10 Frame Size: 6070SK ~ 6115SK

Input Speed	n_1 = 980 / 1165 r/min	n_1: Input Speed [r/min]	T_{out}: Allowable output torque [N·m, kgf·m]
		n_2: Output Speed [r/min]	Pro: Allowable output shaft radial load [N, kgf]
		P_1: Allowable input power [kW]	*Consult us for Pro of CNF and CHF type.

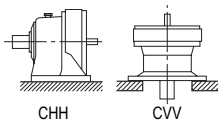

Frame Size	n_1 [r/min]	980							1165							Page of Dim.
	n_2 [r/min]	392	327	245	196	163	123	98.0	466	388	291	233	194	146	117	
	Ratio[Z]	2.5	3	4	5	6	8	10	2.5	3	4	5	6	8	10	
6070SK	P_1[kW]	0.801	0.760	0.649	0.627	0.549	0.411	0.317	0.927	0.882	0.763	0.734	0.642	0.482	0.371	
	T_{OUT}[N•m]	18.5	21.1	24.0	29.0	30.5	30.5	29.3	18.1	20.6	23.8	28.6	30.0	30.0	28.9	CHH C-70
	T_{OUT}[kgf•m]	1.89	2.15	2.45	2.96	3.11	3.11	2.99	1.84	2.10	2.42	2.91	3.06	3.06	2.95	
	Pro[N]	1230	1280	1410	1530	1620	1770	1770	1150	1200	1310	1430	1520	1710	1770	CVV C-81
	Pro[kgf]	125	130	144	156	165	180	180	117	122	134	146	155	174	180	
6075SK	P_1[kW]	1.00	0.950	0.811	0.784	0.686	0.514	0.396	1.16	1.10	0.953	0.918	0.803	0.603	0.464	
	T_{OUT}[N•m]	23.2	26.4	30.0	36.3	38.1	38.1	36.6	22.6	25.7	29.7	35.7	37.5	37.6	36.1	CHH C-70
	T_{OUT}[kgf•m]	2.36	2.69	3.06	3.70	3.88	3.88	3.73	2.30	2.62	3.03	3.64	3.82	3.83	3.68	
	Pro[N]	1180	1230	1340	1460	1550	1750	1770	1100	1150	1260	1360	1450	1640	1770	CVV C-81
	Pro[kgf]	120	125	137	149	158	178	180	112	117	128	139	148	167	180	
6080SK	P_1[kW]	1.20	1.26	1.27	1.19	0.997	0.802	0.615	1.38	1.42	1.42	1.34	1.12	0.939	0.720	
	T_{OUT}[N•m]	27.9	35.1	47.0	55.3	55.4	59.4	56.9	27.0	33.3	44.4	52.2	52.3	58.5	56.1	CHH C-70
	T_{OUT}[kgf•m]	2.84	3.57	4.79	5.63	5.65	6.05	5.80	2.75	3.39	4.52	5.32	5.33	5.96	5.72	
	Pro[N]	1290	1330	1410	1500	1620	1780	1980	1220	1260	1330	1420	1520	1660	1850	CVV C-81
	Pro[kgf]	132	136	144	153	165	181	202	124	128	136	145	155	169	189	
6085SK	P_1[kW]	1.51	1.58	1.59	1.40	1.25	1.00	0.768	1.73	1.78	1.78	1.57	1.40	1.17	0.900	
	T_{OUT}[N•m]	34.8	43.8	58.8	64.9	69.3	74.2	71.1	33.7	41.6	55.5	61.3	65.4	73.2	70.1	CHH C-70
	T_{OUT}[kgf•m]	3.55	4.47	5.99	6.61	7.06	7.57	7.25	3.44	4.24	5.65	6.24	6.67	7.46	7.15	
	Pro[N]	1230	1260	1300	1420	1480	1650	1860	1150	1180	1240	1340	1400	1530	1740	CVV C-81
	Pro[kgf]	125	128	133	145	151	168	190	117	120	126	137	143	156	177	
6090SK	P_1[kW]	1.77	1.72	1.72	1.64	1.39	1.08	1.01	2.03	1.97	1.97	1.89	1.60	1.25	1.17	
	T_{OUT}[N•m]	41.0	47.7	63.6	76.1	77.0	80.3	93.7	39.5	46.1	61.5	73.6	74.8	78.1	91.1	CHH C-70
	T_{OUT}[kgf•m]	4.18	4.86	6.48	7.76	7.85	8.19	9.55	4.03	4.70	6.27	7.50	7.62	7.96	9.29	
	Pro[N]	2320	2390	2610	2760	2900	3210	3340	2180	2250	2450	2580	2720	3000	3270	CVV C-81
	Pro[kgf]	236	244	266	281	296	327	340	222	229	250	263	277	306	333	
6095SK	P_1[kW]	2.00	1.93	1.93	1.93	1.65	1.28	1.28	2.29	2.22	2.22	2.22	1.90	1.48	1.48	
	T_{OUT}[N•m]	46.3	53.7	71.6	89.6	91.6	94.7	118	44.6	51.9	69.2	86.5	88.9	92.1	115	CHH C-70
	T_{OUT}[kgf•m]	4.72	5.48	7.30	9.13	9.34	9.65	12.1	4.55	5.29	7.06	8.82	9.07	9.38	11.7	
	Pro[N]	2260	2330	2530	2630	2770	3050	3260	2120	2190	2370	2460	2590	2840	3050	CVV C-81
	Pro[kgf]	230	238	258	268	282	311	332	216	223	242	251	264	290	311	
6100SK	P_1[kW]	2.16	2.23	2.18	2.15	1.81	1.43	1.51	2.56	2.65	2.59	2.56	2.15	1.70	1.71	
	T_{OUT}[N•m]	49.9	61.9	80.6	99.7	101	106	139	49.9	61.9	80.6	99.7	101	106	133	CHH C-70
	T_{OUT}[kgf•m]	5.09	6.31	8.22	10.2	10.3	10.8	14.2	5.09	6.31	8.22	10.2	10.3	10.8	13.6	
	Pro[N]	2220	2260	2440	2530	2690	2920	3060	2070	2090	2260	2340	2480	2700	2870	CVV C-81
	Pro[kgf]	226	230	249	258	274	298	312	211	213	230	239	253	275	293	
6105SK	P_1[kW]	2.53	2.62	2.56	2.53	2.13	1.68	1.67	3.01	3.12	3.05	3.01	2.53	2.00	1.90	
	T_{OUT}[N•m]	58.7	72.8	94.9	117	118	125	155	58.7	72.8	94.9	117	118	125	148	CHH C-70
	T_{OUT}[kgf•m]	5.98	7.42	9.67	11.9	12.1	12.7	15.8	5.98	7.42	9.67	11.9	12.1	12.7	15.1	
	Pro[N]	2130	2140	2300	2370	2530	2730	2920	1970	1980	2120	2180	2320	2490	2740	CVV C-81
	Pro[kgf]	217	218	234	242	258	278	298	201	202	216	222	237	254	279	
6110SK	P_1[kW]	3.97	4.07	4.12	3.50	3.18	2.67	2.14	4.45	4.56	4.62	3.95	3.62	3.13	2.51	
	T_{OUT}[N•m]	91.8	113	153	162	176	197	198	86.7	107	144	154	169	195	195	CHH C-70
	T_{OUT}[kgf•m]	9.36	11.5	15.6	16.5	18.0	20.1	20.2	8.83	10.9	14.7	15.7	17.2	19.9	19.9	
	Pro[N]	2840	2950	3060	3340	3550	3900	4380	2680	2790	2890	3140	3340	3630	4070	CVV C-81
	Pro[kgf]	289	301	312	340	362	398	446	273	284	295	320	340	370	415	
6115SK	P_1[kW]	4.96	5.08	5.15	4.37	3.97	3.34	2.68	5.57	5.70	5.78	4.94	4.53	3.91	3.14	
	T_{OUT}[N•m]	115	141	191	202	221	247	248	108	133	180	192	212	244	244	CHH C-70
	T_{OUT}[kgf•m]	11.7	14.4	19.4	20.6	22.5	25.2	25.3	11.0	13.6	18.4	19.6	21.6	24.8	24.9	
	Pro[N]	2630	2710	2780	3040	3220	3560	4010	2480	2560	2620	2850	3010	3290	3720	CVV C-81
	Pro[kgf]	268	276	283	310	328	363	409	253	261	267	291	307	335	379	
Frame Size	Ratio[Z]	2.5	3	4	5	6	8	10	2.5	3	4	5	6	8	10	Page of Dim.
	n_2 [r/min]	392	327	245	196	163	123	98.0	466	388	291	233	194	146	117	
	n_1 [r/min]	980							1165							

Note: 1. Reduction ratio in the selection table is "nominal ratio." Refer to "6000 SK Series (Actual Reduction Ratio)" in page A-4 for actual reduction ratio.
2. Allowable radial load Pro is the value at the midpoint of the output shaft. Refer to pages F-11~12 when radial load is off the midpoint of output shaft and for checking thrust load.
3. Refer to pages F-15~16 for allowable radial load for input shaft.

Selection Tables 6000SK Series Reducer

Nominal Reduction Ratio 2.5 ~ 10 Frame Size: 6070SK ~ 6115SK

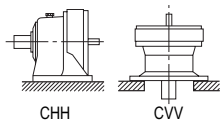

n_1: Input Speed [r/min]
n_2: Output Speed [r/min]
P_1: Allowable input power [kW]
T_{out}: Allowable output torque [N·m, kgf·m]
Pro: Allowable output shaft radial load [N, kgf]
*Consult us for Pro of CNF and CHF type.

Input Speed n_1 = 1450 / 1750 r/min

Frame Size	n_1 [r/min]	1450							1750							Page of Dim.
	n_2 [r/min]	580	483	363	290	242	181	145	700	583	438	350	292	219	175	
	Ratio[Z]	2.5	3	4	5	6	8	10	2.5	3	4	5	6	8	10	
6070SK	P_1[kW]	1.11	1.06	0.935	0.886	0.784	0.589	0.454	1.11	1.06	0.935	0.886	0.784	0.589	0.454	
	T_{OUT}[N•m]	17.4	19.9	23.4	27.7	29.4	29.5	28.4	14.4	16.5	19.4	23.0	24.4	24.4	23.5	CHH C-70
	T_{OUT}[kgf•m]	1.77	2.03	2.39	2.83	3.00	3.01	2.89	1.47	1.68	1.98	2.34	2.49	2.49	2.40	
	Pro[N]	1070	1110	1210	1320	1390	1570	1730	1020	1060	1170	1280	1340	1510	1650	CVV C-81
	Pro[kgf]	109	113	123	135	142	160	176	104	108	119	130	137	154	168	
6075SK	P_1[kW]	1.39	1.32	1.17	1.11	0.980	0.736	0.567	1.39	1.32	1.17	1.11	0.980	0.736	0.567	
	T_{OUT}[N•m]	21.7	24.9	29.3	34.7	36.8	36.9	35.5	18.0	20.6	24.3	28.7	30.5	30.5	29.4	CHH C-70
	T_{OUT}[kgf•m]	2.21	2.53	2.98	3.53	3.75	3.76	3.62	1.83	2.10	2.47	2.93	3.11	3.11	3.00	
	Pro[N]	1020	1060	1150	1260	1320	1500	1660	980	1020	1110	1220	1290	1450	1590	CVV C-81
	Pro[kgf]	104	108	117	128	135	153	169	100	104	113	124	131	148	162	
6080SK	P_1[kW]	1.65	1.65	1.65	1.55	1.30	1.10	0.880	1.65	1.65	1.65	1.55	1.30	1.10	0.880	
	T_{OUT}[N•m]	25.8	30.9	41.2	48.5	48.6	54.8	55.1	21.3	25.6	34.2	40.2	40.3	45.4	45.6	CHH C-70
	T_{OUT}[kgf•m]	2.62	3.15	4.20	4.94	4.96	5.59	5.61	2.18	2.61	3.48	4.10	4.11	4.63	4.65	
	Pro[N]	1130	1170	1240	1320	1410	1530	1700	1090	1130	1210	1290	1380	1490	1650	CVV C-81
	Pro[kgf]	115	119	126	135	144	156	173	111	115	123	131	141	152	168	
6085SK	P_1[kW]	2.06	2.06	2.06	1.82	1.62	1.37	1.10	2.06	2.06	2.06	1.82	1.62	1.37	1.10	
	T_{OUT}[N•m]	32.2	38.7	51.6	56.9	60.8	68.6	68.8	26.7	32.0	42.7	47.2	50.4	56.8	57.0	CHH C-70
	T_{OUT}[kgf•m]	3.28	3.94	5.26	5.80	6.20	6.99	7.02	2.72	3.27	4.35	4.81	5.14	5.79	5.81	
	Pro[N]	1060	1100	1150	1250	1300	1410	1590	1030	1070	1130	1230	1290	1390	1550	CVV C-81
	Pro[kgf]	108	112	117	127	133	144	162	105	109	115	125	131	142	158	
6090SK	P_1[kW]	2.40	2.34	2.34	2.24	1.91	1.50	1.40	2.40	2.34	2.34	2.24	1.91	1.50	1.40	
	T_{OUT}[N•m]	37.5	43.9	58.6	70.1	71.7	75.1	87.6	31.1	36.4	48.5	58.1	59.4	62.2	72.6	CHH C-70
	T_{OUT}[kgf•m]	3.83	4.48	5.97	7.14	7.31	7.65	8.93	3.17	3.71	4.95	5.92	6.06	6.34	7.40	
	Pro[N]	2010	2080	2260	2380	2510	2760	3010	1930	2000	2190	2320	2420	2680	2910	CVV C-81
	Pro[kgf]	205	212	230	243	256	281	307	197	204	223	236	247	273	297	
6095SK	P_1[kW]	2.71	2.64	2.64	2.64	2.27	1.77	1.77	2.71	2.64	2.64	2.64	2.27	1.77	1.77	
	T_{OUT}[N•m]	42.4	49.5	66.0	82.5	85.3	88.5	111	35.1	41.0	54.7	68.3	70.7	73.4	92	CHH C-70
	T_{OUT}[kgf•m]	4.32	5.04	6.72	8.41	8.70	9.02	11.3	3.58	4.18	5.57	6.96	7.21	7.48	9.3	
	Pro[N]	1960	2020	2190	2270	2380	2620	2800	1890	1960	2130	2220	2320	2560	2740	CVV C-81
	Pro[kgf]	200	206	223	231	243	267	285	193	200	217	226	237	261	279	
6100SK	P_1[kW]	3.19	3.30	3.22	3.15	2.67	2.12	1.98	3.19	3.30	3.22	3.15	2.67	2.12	1.98	
	T_{OUT}[N•m]	49.9	61.9	80.6	98.6	100	106	124	41.3	51.3	66.8	81.7	83	88	103	CHH C-70
	T_{OUT}[kgf•m]	5.09	6.31	8.22	10.0	10.2	10.8	12.6	4.21	5.23	6.81	8.3	8.5	9.0	10.5	
	Pro[N]	1880	1900	2040	2120	2250	2420	2680	1820	1850	2010	2090	2220	2400	2640	CVV C-81
	Pro[kgf]	192	194	208	216	229	247	273	186	189	205	213	226	245	269	
6105SK	P_1[kW]	3.75	3.88	3.79	3.70	3.14	2.49	2.20	3.75	3.88	3.79	3.70	3.14	2.49	2.20	
	T_{OUT}[N•m]	58.7	72.8	94.9	116	118	125	138	48.6	60.4	78.6	96	98	103	114	CHH C-70
	T_{OUT}[kgf•m]	5.98	7.42	9.67	11.8	12.0	12.7	14.0	4.95	6.15	8.01	9.8	9.9	10.5	11.6	
	Pro[N]	1800	1800	1900	1960	2090	2230	2550	1750	1770	1890	1960	2080	2240	2530	CVV C-81
	Pro[kgf]	183	183	194	200	213	227	260	178	180	193	200	212	228	258	
6110SK	P_1[kW]	5.15	5.28	5.35	4.61	4.22	3.70	3.06	5.15	5.28	5.35	4.61	4.22	3.70	3.06	
	T_{OUT}[N•m]	80.6	99.1	134	144	158	185	191	66.8	82.1	111	120	131	153	159	CHH C-70
	T_{OUT}[kgf•m]	8.21	10.1	13.6	14.7	16.1	18.9	19.5	6.80	8.4	11.3	12.2	13.4	15.6	16.2	
	Pro[N]	2480	2590	2690	2900	3090	3350	3710	2410	2520	2640	2840	3030	3290	3640	CVV C-81
	Pro[kgf]	253	264	274	296	315	341	378	246	257	269	290	309	335	371	
6115SK	P_1[kW]	6.44	6.60	6.69	5.77	5.28	4.63	3.83	6.44	6.60	6.69	5.77	5.28	4.63	3.83	
	T_{OUT}[N•m]	101	124	167	180	198	232	239	83	103	139	150	164	192	198	CHH C-70
	T_{OUT}[kgf•m]	10.3	12.6	17.1	18.4	20.2	23.6	24.4	8.5	10.5	14.1	15.2	16.7	19.6	20.2	
	Pro[N]	2310	2380	2430	2650	2800	3010	3360	2270	2340	2420	2630	2790	3010	3360	CVV C-81
	Pro[kgf]	235	243	248	270	285	307	343	231	239	247	268	284	307	342	
Frame Size	Ratio[Z]	2.5	3	4	5	6	8	10	2.5	3	4	5	6	8	10	Page of Dim.
	n_2 [r/min]	580	483	363	290	242	181	145	700	583	438	350	292	219	175	
	n_1 [r/min]	1450							1750							

Note: 1. Reduction ratio in the selection table is "nominal ratio." Refer to "6000 SK Series (Actual Reduction Ratio)" in page A-4 for actual reduction ratio.
2. Allowable radial load Pro is the value at the midpoint of the output shaft. Refer to pages F-11~12 when radial load is off the midpoint of output shaft and for checking thrust load.
3. Refer to pages F-15~16 for allowable radial load for input shaft.

C CYCLO® SPEED REDUCER

1. How to Select

Standard Specifications of Reducer

		CYCLO® DRIVE 6000 Series		CYCLO® DRIVE 6000SK Series (With "SK" at the end of frame size)
Lubrication		Grease or oil lubricated models		Grease lubricated models
Speed reduction		Internal planetary gear mechanism with trochoidal curved tooth profile		Involute gear mechanism
Output rotation direction		Single reduction type	Reverse rotation direction	Same rotation direction (*Note the difference with single reduction type of CYCLO® DRIVE 6000 Series.)
		Duble reduction type	Same rotation direction	
		*In contrast to input rotation direction.		
Ambient Conditions	Installation location	Indoors (Minimal)		
	Ambient Temperature	-10°~40°C		
	Ambient Humidity	Under 85%		
	Elevation	Lower than 1,000 meters		
	Atmosphere	Well ventilated location, free of corrosive gases, explosive gases, vapors, and dust.		
Method of Mounting Note: 1		CHH Type: Slow speed shaft in horizontal direction and with foot CHF Type: Slow speed shaft in horizontal direction and with flange (not for 6000SK Series) CVV Type: Slow speed shaft down in vertical direction and with V-flange *Models with "N" for the second nomenclature symbol (such as CNH Type) may by mounted in any direction.		
Method of coupling with driven machine		Coupling, gears, chain sprocket or belt.		
Painting		Type: Acrylic modified phtalic Color: Equivalent to Mancel 6.5PB 3.6/8.2.		

Note: 1. Models for universal mounting (types with N for the second digit of nomenclature) can be manufactured for following frame sizes only. Other frame sizes require indication for mounting direction.

[Frame sizes for universal mounting direction] *□ of the frame size indicates 0, 5, or H.
606□, 607□, 608□, 609□, 610□, 611□, 612□,
606□DA, 607□DA, 608□DA, 609□DA, 610□DA, 612□DA, 612□DB

Model Selection

Select models referring to the following flowchart. Consult us if there is any question.

Step 1: Determination of Operating Condition

Determine the following condition before starting selection.

- Application
- Continuous operation, or operation with frequent startup and stop
- Load torque T_L
- Radial load and axial load
- Operation hours per day
- Level of shock load
- Mounting direction (slow speed shaft direction), mounting shape
- Other ambient conditions (temperature, humidity, indoor or outdoor, and other environments)

Step 2: Model Selection

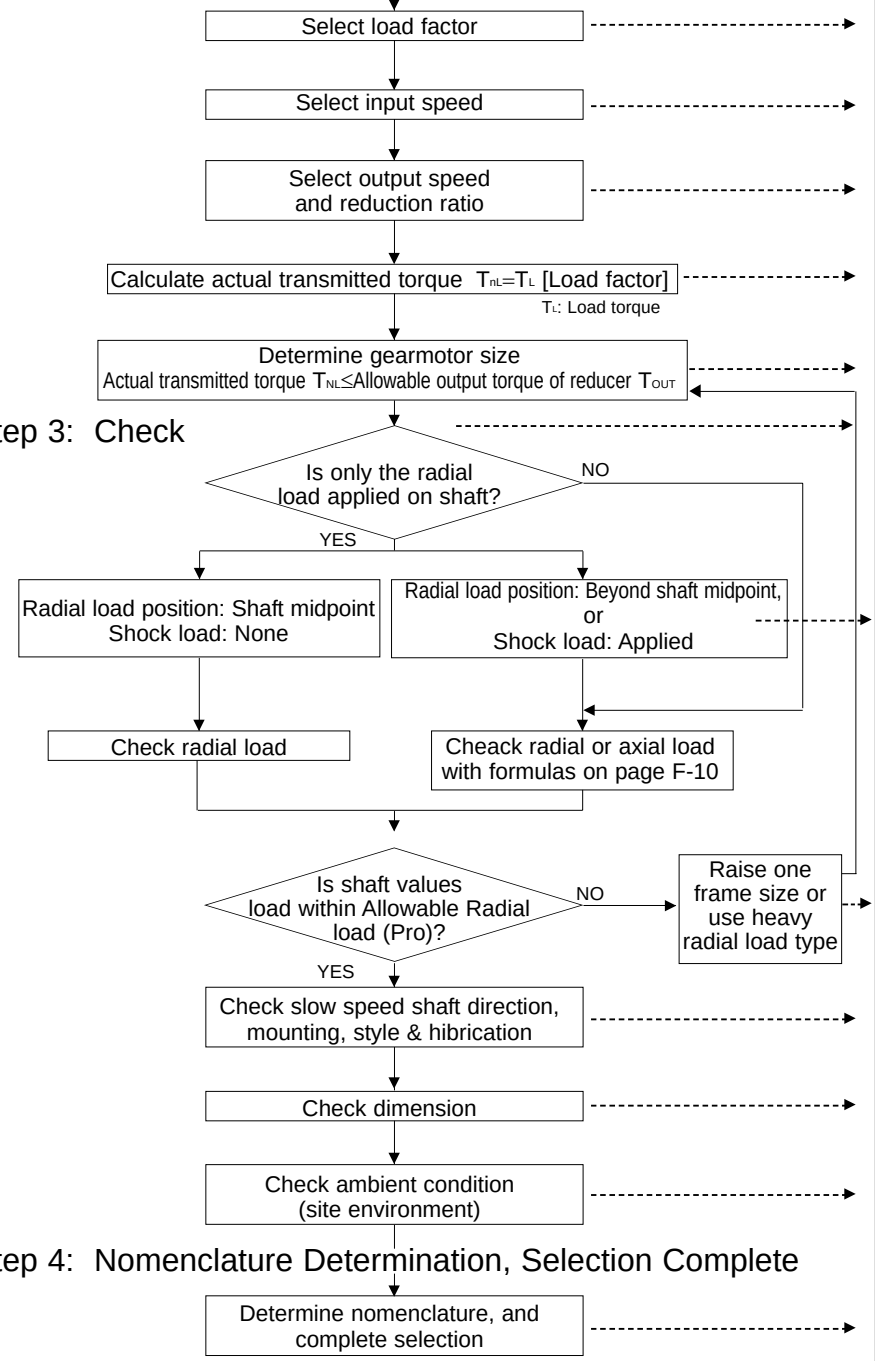

Procedure
- Select appropriate load factor from pages C-7~8.
- Open the page with selection table for your input speed, starting from page C-11.
- Select the cell containing close value to your output speed or reduction ratio in the selection table.
-Calculate actual transmitted torque from load torque and load factor.
- Select frame size and reduction ratio, which is larger than the calculated actual transmitted torque, from the selection table. - Check whether only the radial load applied on slow and high speed shaft. Refer to Technical Data starting at page F-10 and calcutate if axial load is also applied.
- Refer to Technical Data starting at page F-10 depending on where the radial load is applied, or if any shock load is applied or not. *1 Allowable radial load for slow speed shaft in the selection table is when the load position is at the midpoint of the shaft. *2 Calculate radial load including initial tension if they are applied using chain, V-belt, synchronous belt, etc.
- Check whether the calculated radial load does not exceed allowable radial load of the slow speed shaft.
- Check whether the selected combination is sufficient for your slow speed shaft direction, mounting style, and lubrication method.
- Check whether the dimension is adequate. Consult us if it does not match your operation condition.
- Check whether the selected combination is sufficient for your operation condition, such as surrounding environment. Refer to "Standard Specifications of Reducer" in page C-3 or section "F. Technical Data" for checking.

Step 3: Check

Step 4: Nomenclature Determination, Selection Complete

Determine nomenclature, and complete selection

- Determine nomenclature for selected model referring to "Nomenclature" in page C-9. Now, the selection process is complete.

Description of Our Selection Table

This is a brief desciption of our tables on page C-11 and after.

Upper row: Output speed [r/min]
Lower row: Reduction ratio
* Note that “reduction ratio = nominal ratio” for models with “SK” at the end of frame size (6000 SK Series).
(Indicated reduction ratio is the same as actual reduction ratios for other models.)

Input speed [r/min]

Selection Tables 6000 Series Reducer

Single Reduction Ratio 6 ~ 119 Frame Size: 6060 ~ 6120

Input Speed	n_1 = 1450 r/min	n_1 : Input Speed [r/min]	T_{out}: Allowable output torque [N·m, kgf·m]
		n_2 : Output Speed [r/min]	P_{ro} : Allowable output shaft radial load [N, kgf·m]
		P_1 : Allowable input power [kW]	* Consult us Pro for CNF-CHF type.

CNH

Frame Size	n_2 [r/min]	242	181	132	112	96.7	85.3	69.0	58.0	50.0	41.4	33.7	28.4	24.6	2
	Ratio[Z]	6	8	11	13	15	17	21	25	29	35	43	51	59	
6060	P_1[kW]	0.200	0.200	0.200	0.200	0.200	0.200	0.183	0.110	0.110	0.110	0.089	-	-	
	T_{OUT}[N•m]	7.51	10.0	13.8	16.3	18.8	21.3	24.0	17.2	20.0	24.0	24.0	-	-	
	T_{OUT}[kgf•m]	0.766	1.02	1.41	1.66	1.92	2.17	2.45	1.75	2.04	2.45	2.45	-	-	
	Pro[N]	798	912	1180	1180	1180	1180	1180	1180	1180	1180	1180	-	-	
	Pro[kgf]	81.3	93	120	120	120	120	120	120	120	120	120	-	-	
6065	P_1[kW]	0.286	0.286	0.286	0.286	0.286	0.282	0.228	0.166	0.165	0.137	0.112	-	-	
	T_{OUT}[N•m]	10.7	14.3	19.7	23.3	26.9	30.0	30.0	25.9	30.0	30.0	30.0	-	-	
	T_{OUT}[kgf•m]	1.09	1.46	2.01	2.38	2.74	3.06	3.06	2.64	3.06	3.06	3.06	-	-	
	Pro[N]	793	904	1180	1180	1180	1180	1180	1180	1180	1180	1180	-	-	
	Pro[kgf]	80.8	92.2	120	120	120	120	120	120	120	120	120	-	-	
6070	P_1[kW]	0.347	0.347	0.347	0.347	0.347	0.347	0.310	0.230	0.226	0.205	0.167	0.100	0.100	
	T_{OUT}[N•m]	13.0	17.3	23.9	28.2	32.5	36.9	42.1	35.9	41.0	45.0	45.0	31.9	36.9	
	T_{OUT}[kgf•m]	1.33	1.76	2.44	2.87	3.31	3.76	4.29	3.66	4.18	4.59	4.59	3.25	3.76	
	Pro[N]	1380	1520	1690	1770	1770	1770	1770	1770	1770	1770	1770	1770	1770	
	Pro[kgf]	141	155	172	180	180	180	180	180	180	180	180	180	180	
6075	P_1[kW]	0.407	0.407	0.407	0.407	0.407	0.407	0.407	0.294	0.286	0.272	0.223	0.143	0.136	
	T_{OUT}[N•m]	15.3	20.4	28.0	33.1	38.2	43.3	53.5	46.0	52.0	59.6	60.0	45.7	50.1	
	T_{OUT}[kgf•m]	1.56	2.08	2.85	3.37	3.89	4.41	5.45	4.69	5.30	6.08	6.12	4.66	5.11	
	Pro[N]	1370	1510	1680	1770	1770	1770	1770	1770	1770	1770	1660	1750	1700	
	Pro[kgf]	140	154	171	180	180	180	180	180	180	180	169	178	173	
	P_1[kW]	0.592	0.592	0.592	0.592	0.592	0.592	0.478	0.340	0.340	0.340	0.250	0.192	0.185	0.

Frame size

First row: Allowable input capacity [kW]
Second row: Allowable output torque [N·m]
Third row: Allowable output torque [kgf·m]
Fourth row: Allowable radial load at slow speed shaft [N]
Fifth row: Allowable radial load at slow speed shaft [kgf]

Selection Example

Below is an example selection process following the model selection procedure inpage C-4.

•Operation condition

- Application: Chain conveyor
- Operation hours per day: 24 hours/day
- Operation pattern: Continuous operation
- Load torque: 178N·m
- Input speed: 1450 r/min
- Output speed: 33.7 r/min
- Connection with machine used:
  Output side: Chain sprocket
  Sprocket pitch circle radius: R=61mm
  Load position: Midpoint of shaft Initial tension=0
  Input side: Coupling
  Level of shock load: None
- Mounting direction (slow speed shaft direction), mounting style:

The model is selected based on above operation conditions in this example.

Operation condition, selection, and calculation results	Reference pages
• **Select load factor** Load condition for chain conveyor application → Uniform load (U) Load factor = 1.2 (U, 24 hours/day operation)	Page C-7,8 Table C-2: Reducer Load Classification Table C-1: Reducer Load Factor
• **Select input speed** 1450 r/min	Page C-15, 40-42, 48-57: CYCLO® SPEED REDUCERS Selection Tables
• **Select output speed** Power source frequency 50Hz, output speed 33.7r/min → 1450/33.7 = Reduction ratio 43	Page C-40-42: CYCLO® SPEED REDUCERS Selection Tables
• **Calculated actual transmitted torque** T_{nL}=178 [N·m] × 1.2=213.6 [N·m]	
• **Determine reducer frame size** $T_{nL} \leq T_{OUT}$ → 213.6 [N·m] ≤ 292 [N·m] Reducer frame size : 6105	Page C-40: CYCLO® SPEED REDUCERS Selection Tables
• **Check radial load** (Output side) Pr = TL/R ≤ Pro/Cf Pr = 199 [N·m] /0.061 [m] = 3262 [N] ≤ 5400 [N] /1 = 5400 [N] → OK (Input side) No radial load because of coupling connection.	Page F-10: Allowable Radial and Axial Load Page C-40: CYCLO® SPEED REDUCERS Selection Tables
• **Check slow speed shaft direction, mounting style, lubrication method** Slow speed shaft direction: Horizontal, Mounting style: Foot mount → Nomenclature: CNH (Grease lubrication method)	Page C-9: Nomenclature
• **Check dimension** Check dimension using Dimension Tables.	Page C-71: Dimension Tables
• **Check surrounding condition** Ambient temperature: 20°C → OK	Page C-3: Standard Specifications of Gearmotor
• **Determine nomenclature** Determine nomenclature: CNH-6105-43 The selection is complete.	Page C-9: Nomenclature

Selection of Load Factor

CYCLO® SPEED REDUCER is designed for operation under uniform load for 10 hours/day.

Load factors below must be considered for operations exceeding 10 hours/day or load condition of your application. Select load factor by method (1) or (2) according to the load characteristics.

(1) Load Factor Selection by Load Classifications

[Load Factor] U: Uniform load M: Moderate shock H: Heavy shock

Table C-1 Reducer Load Factor

Daily Duty	~3 hours/day			~10 hours/day			~24 hours/day		
	U	M	H	U	M	H	U	M	H
Load Factor	0.80	1.00	1.35	1.00	1.20	1.50	1.50	1.35	1.60

Table C-2 Recommended Load Classifications

Type of APPLICATION	Type of LOAD
*Aerator	
Agitators.	
pure liquids	U
liquids & solids	M
liquids-variable density	M
Blowers	
centrifugal	U
lobe	M
vane	U
Brewing & Distilling	
bottling machinery	U
brew kettles, cont. duty	U
cookers-cont. duty	U
mash tubs-cont. duty	U
scale hopper, frequent starts	M
Can Filling Machines	U
*Cane Knives	M
Car Dumpers	H
Car Pullers	M
Clarifiers	U
Classifiers	M
Clay Working Machinery	
brick press	H
briquette machine	H
clay working machinery	M
pug mill	M
Compressors	
centrifugal	U
lobe	M
reciprocating, multi-cylinder	M
reciprocating, single-cylinder	H
Conveyors-Uniformly	
Loaded or Fed	
apron	U
assembly	U
belt	U
bucket	U
chain	U
flight	U
oven	U
screw	U
Conveyors-Heavy Duty	
Not Uniformly Fed	
apron	M
assembly	M
belt	M
bucket	M
chain	M
flight	M
*live roll	
oven	M
reciprocating	H
screw	M
shaker	H
Cranes (Except for Dry Dock Cranes)	
main hoists	
*bridge travel	
*trolley travel	
Crusher	
ore	H
stone	H
**sugar	M
Dredges	
cable reels	M
conveyors	M
cutter head drives	H
jig drives	H
maneuvering winches	M
pumps	M
screen drive	H
stackers	M
utility winches	M
*Dry Dock Cranes	
Elevators	
bucket - uniform load	U
bucket - heavy load	M
bucket - cont.	U
centrifugal discharge	U
escalators	U
freight	M
gravity discharge	U
*man lifts	
*passenger	
**Extruders (Plastics)	
blow molders	M
coating	U
film	U
pipe	U
pre-plasticizers	M
rods	U
sheet	U
tubing	U
Fans	
centrifugal	U
*cooling towers	
induced draft	U
*forced draft	
induced draft	M
large (mine, etc.)	M
large (industrial)	M
light (small diameter)	U
Feeders	
apron	M
belt	M
disc	U
reciprocating	H
screw	M
Food industry	
beet slicer	M
cereal cooker	U
dough mixer	M
meat grinders	M
Generators (not welding)	U
Hammer mills	H
Hoists	
heavy duty	H
medium duty	M
skip hoist	M
Laundry Washers	
reversing	M
Laundry Tumblers	M
Line Shaft	
driving processing equipment	M
light	U
other line shafts	U
Lumber Industry	
barkers-hydraulic-mechanical	H
burner conveyor	M
chain saw & drag saw	H
chain transfer	H
craneway transfer	H
de-barking drum	H
edger feed	M
gang feed	H
green chain	M
live rolls	H
log haul-locline	H
log haul-well type	H
log turning device	H
main log conveyor	H
off bearing rolls	M
planer feed chains	M
planer floor chains	M
planer tilting hoist	M
re-saw merry- go-round conveyor	M
roll cases	H
slab conveyor	H
small waste-conveyor-belt	U
small waste-conveyor-chain	M
sorting table	M
tipple hoist conveyor	M
tipple hoist drive	M
transfer conveyors	M
transfer rolls	M
tray drive	M
trimmer feed	M
waste conveyor	M
Machine Tools	
bending roll	M
punch press-gear driven	H
*notching press-belt driven	
plate planers	H
tapping machine	H
other machine tools	
main drives	M
auxiliary drives	U
Metal Mills	
draw bench carriage & main drive	M
forming machines	H
*pinch, dryer & scrubber rolls, reversing	
slitters	M
table conveyors-non-reversing group drives	M
individual drives	H
*table conveyors-reversing	
wire drawing & flattening machine	M
wire winding machine	M
Mills, Rotary Type	
**ball	M
**cement kilns	M
**dryers & coolers	M
kilns	M
**pebble	M
**rod , plain & wedge bar	M
tumbling barrels	H
Mixers	
concrete mixers, cont.	M
concrete mixers, intermittent	M
constant density	U
variable density	M
Oil Industry	
chillers	M
*oil well pumping	
paraffin filter press	M
rotary kilns	M
Paper Mills	
agitators (mixers)	M
barker-auxiliaries-hydraulic	M
barker-mechanical	M
barking drum	H
beater & pulper	M
bleacher	U
calendars	M
calendars-super	H
converting machine, except cutters, platers	M
conveyors	U
couch	M
cutters-platers	H
cylinders	M
dryers	M
Paper Mills	
felt stretcher	M
felt whipper	H
jordans	H
log haul	H
presses	U
pulp machine reel	M
stock chests	M
suction roll	U
washers & thickeners	M
winders	U
*Printing Presses	
Pullers	
barge haul	H
Pumps	
centrifugal	U
proportioning	M
reciprocating single acting, 3 or more cylinders	M
double acting, 2 or more cylinders	M
*single acting, 1 or 2 cylinders	
*double acting, single cylinder	
rotary-gear type	U
rotary-lobe, vane	U
Rubber & Plastics Industries	
**crackers	H
laboratory equipment	M
**mixing mills	H
**refiners	M
**rubber calendars	M
**rubber mill (2 on line)	M
**rubber mill (3 on line)	U
**sheeter	M
*tire building machines	
*tire & tube press openers	
**tubers & strainers	M
**warming mills	M
Sand Muller	M
Screens	
air washing	U
rotary-stone or gravel	M
traveling water intake	U
Sewage Disposal Equipment	
bar screens	U
chemical feeders	U
collectors, circuline or straightline	U
dewatering screws	M
grit collectors	U
scum breakers	M
slow or rapid mixers	M
sludge collectors	U
thickeners	M
vacuum filters	M
Slab Pushers	M
*Steering Gear	
Stokers	U
Sugar Industry	
**cane knives	M
**crushers	M
**mills	H
Textile Industry	
batchers	M
calendars	M
cards	M
dry cans.	M
dryers	M
dyeing machinery	M
*knitting machines	
looms	M
mangles	M
nappers	M
pads	M
*range drives	
slashers	M
soapers	M
spinners	M
tenter frames	M
washers	M
winders	M
*Windlass	

Remarks: * Refer to factory. ** To be selected on basis of 24hr. service only.

Note: Table above contains reference value. Names and mechanical characteristics of the actual machine may differ from the table above.

Selection of Load Factor

(2) Load Factor Selection by Start - Stop Frequency

Select load factor according to the frequency of start - stop and operation hours.
Also, check the thermal load of your motor at this time (Refer to your motor manual).

Table C-3 Start - Stop Frequency and Reducer Load Factor

Number of start-stop [times/hour]	~3 hours/day			~10 hours/day			~24 hours/day		
	I	II	III	I	II	III	I	II	III
≤10	0.80	1.00	1.20	1.00	1.10	1.35	1.20	1.25	1.50
≤200	0.85	1.10	1.30	1.10	1.30	1.50	1.25	1.50	1.65
≤500	0.90	1.20	1.40	1.15	1.45	1.60	1.30	1.60	1.75

$$\text{The ratio of Moment of Inertia (The ratio of GD}^2\text{)} = \frac{\text{Moment of Inertia (GD}^2\text{) of load as seen from the motor shaft}}{\text{Moment of Inertia (GD}^2\text{) of motor}}$$

Load Factor
I : Allowable ratio of Moment of Inertia (GD^2) ≤ 0.3
II : Allowable ratio of Moment of Inertia (GD^2) ≤ 3
III: Allowable ratio of Moment of Inertia (GD^2) ≤ 10

Note: 1. Include operation times by brake, clutch, etc. in the start - stop frequency.
2. Consult us for applications with startup with torque or radial load applied. Other solutions may be necessary.

Nomenclatue

Slow Speed Shaft Direction	
Horizontal, slow speed shaft level	H
Vertical, slow speed shaft down	V
Vertical, slow speed shaft up	W
Universal mounting	N

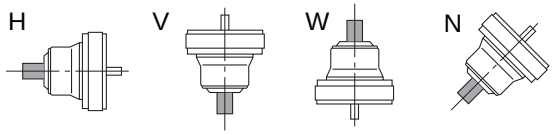

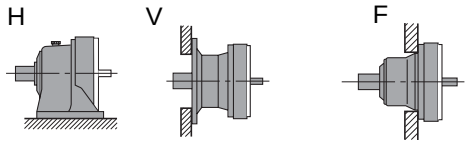

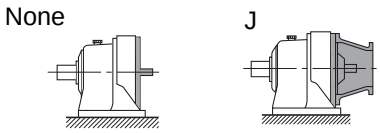

Mounting style	
Foot	H
V flange	V
Flange	F

Type of Input	
Gearmotor	M
With adaptor	JM

Special Specifications	
Standard specification	blank
Special specification	S

Shaft specification	
Metric JIS (Standard)	-
Inch size	Y
Metric DIN	G

Suffix			
Standard	-	HH Type Ceiling	H1
Light Heavy Radial	R1	Modification Left Wall	H2
High Cap. Brg. Ductile Casing	R2	Modification Right Wall	H3
Baseplate	BP	Torque Limiter	TL
Low Backlash	LB		

Frame size (Refer to Selection Tables starting from page C-11.)

Nominal ratio

C H H ☐ ☐ — 6165 ☐ — ☐ — 35

- C — CYCLO® DRIVE (C)
- H — Slow speed shaft direction
- H — Mounting style
- ☐ — Type of input
- ☐ — Special specification symbol
- 6165 — Frame size
- ☐ — Shaft specification
- ☐ — Suffix
- 35 — Reduction ratio

Nomenclature and Product Examples

Nomenclature Examples(Speed Reducer)

Example 1.
CNH - 6115 - 29

C:	Model	- CYCLO® DRIVE
N:	Slow speed shaft direction	- Universal direction
H:	Mounting style	- Foot
6115:	Frame size	- 6115
29:	Reduction ratio	- 29

Example 2.
CVV - 6195DA - 377

C:	Model	- CYCLO® DRIVE
V:	Slow speed shaft direction	- Vertical mounting
V:	Mounting style	- V flange
6195DA:	Frame size	- 6195DA
377:	Reduction ratio	- 377

Product and Nomenclature Symbol Examples (Speed Reducer)

Standard and various application products of CYCLO® SPEED REDUCER are classified by their nomenclature symbol as below.
Refer to specific catalogs or consult us for details on our application products.

CYCLO® SPEED REDUCERS

CHH (CNH)

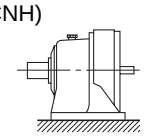

CHF (CNF)

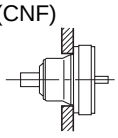

CHV (CNV)

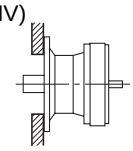

CVH (CNH)

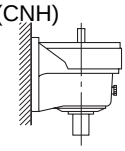

CVF (CNF)

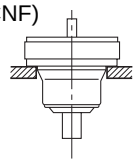

CVV (CNV)

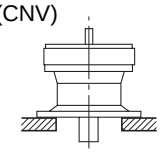

CWH (CNH)

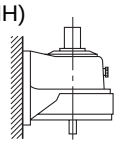

CWF (CNF)

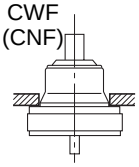

CWV (CNV)

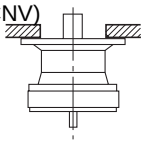

CHHJ

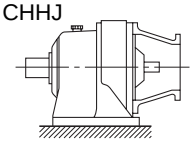

With Adaptor

CHFJ

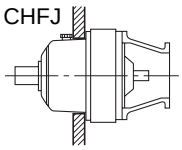

With Adaptor

CVVJ

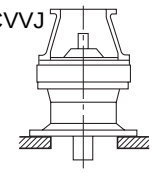

With Adaptor

CYCLO® SPEED REDUCERS Application Products

CHHX (CNHX)

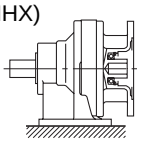

Input Side Hollow Shaft

CHFX (CNFX)

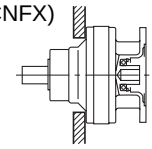

Input Side Hollow Shaft

CVVX (CNVX)

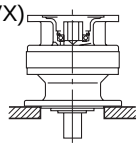

Input Side Hollow Shaft

Selection Tables 6000 Series Reducer

Single Reduction Ratio 6 ~ 119 Frame Size: 6060 ~ 6120

Input Speed	n_1 = 50 r/min	n_1: Input Speed [r/min]	T_{out}: Allowable output torque [N·m, kgf·m]
		n_2: Output Speed [r/min]	Pro: Allowable output shaft radial load [N, kgf]
		P_1: Allowable input power [kW]	*Consult us for Pro of CNF and CHF type.

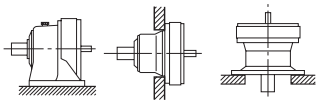

Frame Size	n_2 [r/min]	8.33	6.25	4.55	3.85	3.33	2.94	2.38	2.00	1.72	1.43	1.16	0.980	0.847	0.704	0.575	0.420	Page of Dim.
	Ratio[Z]	6	8	11	13	15	17	21	25	29	35	43	51	59	71	87	119	
6060	P_1[kW]	-	-	-	-	-	-	-	-	-	-	-	-	-	-	-	-	
	T_{OUT}[N•m]	24.0	24.0	24.0	24.0	24.0	24.0	24.0	24.0	24.0	24.0	24.0	-	-	-	-	-	CNH C-71
	T_{OUT}[kgf•m]	2.45	2.45	2.45	2.45	2.45	2.45	2.45	2.45	2.45	2.45	2.45	-	-	-	-	-	CNF C-76
	Pro[N]	969	1010	1180	1180	1180	1180	1180	1180	1180	1180	1180	-	-	-	-	-	CNV C-82
	Pro[kgf]	98.8	103	120	120	120	120	120	120	120	120	120	-	-	-	-	-	
6065	P_1[kW]	-	-	-	-	-	-	-	-	-	-	-	-	-	-	-	-	
	T_{OUT}[N•m]	25.0	27.1	30.0	30.0	30.0	30.0	30.0	30.0	30.0	30.0	30.0	-	-	-	-	-	CNH C-71
	T_{OUT}[kgf•m]	2.55	2.76	3.06	3.06	3.06	3.06	3.06	3.06	3.06	3.06	3.06	-	-	-	-	-	CNF C-76
	Pro[N]	958	974	1140	1180	1180	1180	1180	1180	1180	1180	1180	-	-	-	-	-	CNV C-82
	Pro[kgf]	97.7	99	116	120	120	120	120	120	120	120	120	-	-	-	-	-	
6070	P_1[kW]	-	-	-	-	-	-	-	-	-	-	-	-	-	-	-	-	
	T_{OUT}[N•m]	29.7	43.7	45.0	45.0	45.0	45.0	45.0	45.0	45.0	45.0	45.0	45	45	-	-	-	CNH C-71
	T_{OUT}[kgf•m]	3.03	4.45	4.59	4.59	4.59	4.59	4.59	4.59	4.59	4.59	4.59	5	5	-	-	-	CNF C-76
	Pro[N]	1770	1770	1770	1770	1770	1770	1770	1770	1770	1770	1770	1750	1770	-	-	-	CNV C-82
	Pro[kgf]	180.0	180	180	180	180	180	180	180	180	180	180	178	180	-	-	-	
6075	P_1[kW]	-	-	-	-	-	-	-	-	-	-	-	-	-	-	-	-	
	T_{OUT}[N•m]	29.7	43.7	50.8	60.0	60.0	60.0	60.0	60.0	60.0	60.0	60.0	57	57	-	-	-	CNH C-71
	T_{OUT}[kgf•m]	3.03	4.45	5.18	6.12	6.12	6.12	6.12	6.12	6.12	6.12	6.12	6	6	-	-	-	CNF C-76
	Pro[N]	1770	1770	1770	1770	1770	1770	1770	1770	1770	1770	1660	1580	1580	-	-	-	CNV C-82
	Pro[kgf]	180.0	180	180	180	180	180	180	180	180	180	169	161	161	-	-	-	
6080	P_1[kW]	-	-	-	-	-	-	-	-	-	-	-	-	-	-	-	-	
	T_{OUT}[N•m]	78.5	80.0	80.0	80.0	80.0	80.0	77.2	80.0	80.0	80.0	80.0	80	80	80	80	-	CNH C-71
	T_{OUT}[kgf•m]	8.00	8.15	8.15	8.15	8.15	8.15	7.87	8.15	8.15	8.15	8.15	8	8	8	8	-	CNF C-76
	Pro[N]	2560	2560	2560	2560	2560	2560	2560	2560	2500	2560	2540	2480	2510	2460	2450	-	CNV C-82
	Pro[kgf]	261.0	261	261	261	261	261	261	261	255	261	259	253	256	251	250	-	
6085	P_1[kW]	-	-	-	-	-	-	-	-	-	-	-	-	-	-	-	-	
	T_{OUT}[N•m]	78.5	99.2	100.0	100.0	100.0	100.0	77.2	100.0	100.0	100.0	100.0	100	100	100	100	-	CNH C-71
	T_{OUT}[kgf•m]	8.00	10.10	10.20	10.20	10.20	10.20	7.87	10.20	10.20	10.20	10.20	10	10	10	10	-	CNF C-76
	Pro[N]	2560	2560	2560	2560	2560	2560	2560	2360	2300	2420	2340	2290	2310	2260	2260	-	CNV C-82
	Pro[kgf]	261.0	261	261	261	261	261	261	241	234	247	239	233	235	230	230	-	
6090	P_1[kW]	-	-	-	-	-	-	-	-	-	-	-	-	-	-	-	-	
	T_{OUT}[N•m]	142.0	150.0	150.0	150.0	150.0	150.0	150.0	150.0	150.0	150.0	150.0	149	146	132	150	108	CNH C-71
	T_{OUT}[kgf•m]	14.50	15.30	15.30	15.30	15.30	15.30	15.30	15.30	15.30	15.30	15.30	15	15	14	15	11	CNF C-76
	Pro[N]	3340	3340	3340	3340	3340	3340	3340	3280	3290	3300	3310	3280	3300	3310	3310	3310	CNV C-82
	Pro[kgf]	340.0	340	340	340	340	340	340	334	335	336	337	334	336	337	337	337	
6095	P_1[kW]	-	-	-	-	-	-	-	-	-	-	-	-	-	-	-	-	
	T_{OUT}[N•m]	170.0	168.0	200.0	200.0	200.0	200.0	200.0	200.0	200.0	200.0	200.0	153	146	132	195	108	CNH C-71
	T_{OUT}[kgf•m]	17.30	17.10	20.40	20.40	20.40	20.40	20.40	20.40	20.40	20.40	20.40	16	15	14	20	11	CNF C-76
	Pro[N]	3340	3340	3340	3340	3340	3340	3340	3180	3200	3200	3220	3280	3300	3310	3230	3310	CNV C-82
	Pro[kgf]	340.0	340	340	340	340	340	340	324	326	326	328	334	336	337	329	337	
6100	P_1[kW]	-	-	-	-	-	-	-	-	-	-	-	-	-	-	-	-	
	T_{OUT}[N•m]	171.0	250.0	250.0	250.0	250.0	250.0	250.0	250.0	250.0	250.0	250.0	250	250	250	250	250	CNH C-71
	T_{OUT}[kgf•m]	17.40	25.50	25.50	25.50	25.50	25.50	25.50	25.50	25.50	25.50	25.50	26	26	26	26	26	CNF C-76
	Pro[N]	5400	5400	5400	5400	5400	5400	5400	5400	5400	5400	5400	5400	5400	5380	5400	5360	CNV C-82
	Pro[kgf]	550.0	550	550	550	550	550	550	550	550	550	550	550	550	548	550	546	
6105	P_1[kW]	-	-	-	-	-	-	-	-	-	-	-	-	-	-	-	-	
	T_{OUT}[N•m]	171.0	276.0	308.0	300.0	300.0	300.0	300.0	300.0	300.0	300.0	300.0	297	296	264	300	258	CNH C-71
	T_{OUT}[kgf•m]	17.40	28.10	31.40	30.60	30.60	30.60	30.60	30.60	30.60	30.60	30.60	30	30	27	31	26	CNF C-76
	Pro[N]	5400	5400	5400	5400	5400	5400	5400	5400	5400	5400	5400	5310	5090	5370	4780	5350	CNV C-82
	Pro[kgf]	550.0	550	550	550	550	550	550	550	550	550	550	541	519	547	487	545	
6110	P_1[kW]	-	-	-	-	-	-	-	-	-	-	-	-	-	-	-	-	
	T_{OUT}[N•m]	193.0	360.0	360.0	360.0	360.0	360.0	360.0	360.0	360.0	360.0	360.0	360	360	360	360	-	CNH C-71
	T_{OUT}[kgf•m]	19.70	36.70	36.70	36.70	36.70	36.70	36.70	36.70	36.70	36.70	36.70	37	37	37	37	-	CNF C-76
	Pro[N]	7610	7610	7610	7610	7610	7610	7610	7340	7200	7280	7590	7590	7610	7580	7600	-	CNV C-82
	Pro[kgf]	776.0	776	776	776	776	776	776	748	734	742	774	774	776	773	775	-	
6115	P_1[kW]	-	-	-	-	-	-	-	-	-	-	-	-	-	-	-	-	
	T_{OUT}[N•m]	193.0	406.0	420.0	420.0	420.0	420.0	420.0	420.0	420.0	420.0	420.0	420	420	420	420	-	CNH C-71
	T_{OUT}[kgf•m]	19.70	41.40	42.80	42.80	42.80	42.80	42.80	42.80	42.80	42.80	42.80	43	43	43	43	-	CNF C-76
	Pro[N]	7610	7610	7610	7600	7610	7500	7460	7150	7010	7090	7370	7410	7430	7390	7410	-	CNV C-82
	Pro[kgf]	776.0	776	776	775	776	765	760	729	715	723	751	755	757	753	755	-	
6120	P_1[kW]	-	-	-	-	-	-	-	-	-	-	-	-	-	-	-	-	
	T_{OUT}[N•m]	366	525	525	525	525	520	522	525	520	525	525	525	525	525	525	-	CNH C-71
	T_{OUT}[kgf•m]	37.3	53.5	53.5	53.5	53.5	53.0	53.2	53.5	53.0	53.5	53.5	53.5	53.5	53.5	53.5	-	CNF C-76
	Pro[N]	9810	9810	9810	9810	9810	9810	9810	9810	9810	9810	9810	9810	9810	9810	9780	-	CNV C-82
	Pro[kgf]	1000	1000	1000	1000	1000	1000	1000	1000	1000	1000	1000	1000	1000	1000	997	-	
Frame Size	Ratio[Z]	6	8	11	13	15	17	21	25	29	35	43	51	59	71	87	119	Page of Dim.
	n_2 [r/min]	8.33	6.25	4.55	3.85	3.33	2.94	2.38	2.00	1.72	1.43	1.16	0.980	0.847	0.704	0.575	0.420	

Note: 1. Allowable radial load Pro is the value at the midpoint of the output shaft. Refer to pages F-11~12 when radial load is off the midpoint of output shaft and for checking thrust load.
2. Refer to pages F-15~16 for allowable radial load for input shaft.

Selection Tables 6000 Series Reducer

Single Reduction Ratio 6 ~ 119 Frame Size: 6125 ~ 6195

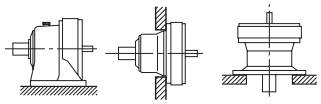

n_1: Input Speed [r/min]
n_2: Output Speed [r/min]
P_1: Allowable input power [kW]
T_{out}: Allowable output torque [N·m, kgf·m]
Pro: Allowable output shaft radial load [N, kgf]
*Consult us for Pro of CNF and CHF type.

Input Speed n_1 = 50 r/min

Frame Size	n_2 [r/min]	8.33	6.25	4.55	3.85	3.33	2.94	2.38	2.00	1.72	1.43	1.16	0.980	0.847	0.704	0.575	0.420	Page of Dim.
	Ratio[Z]	6	8	11	13	15	17	21	25	29	35	43	51	59	71	87	119	
6125	P_1[kW]	-	-	-	-	-	-	-	-	-	-	-	-	-	-	-	-	
	T_{OUT}[N•m]	366	574	622	630	630	630	630	630	630	630	630	630	630	592	630	-	CNH C-71
	T_{OUT}[kgf•m]	37.3	58.5	63.4	64.2	64.2	64.2	64.2	64.2	64.2	64.2	64.2	64.2	64.2	60.3	64.2	-	CNF C-76
	Pro[N]	9810	9810	9810	9810	9810	9810	9810	9810	9810	9810	9810	9810	9810	9810	9560	-	CNV C-82
	Pro[kgf]	1000	1000	1000	1000	1000	1000	1000	1000	1000	1000	1000	1000	1000	1000	975	-	
6130	P_1[kW]	-	-	-	-	-	-	-	-	-	-	-	-	-	-	-	-	
	T_{OUT}[N•m]	555	744	780	780	780	780	780	780	780	780	780	928	912	902	848	-	CHH C-72
	T_{OUT}[kgf•m]	56.6	75.8	79.5	79.5	79.5	79.5	79.5	79.5	79.5	79.5	79.5	94.6	93.0	91.9	86.4	-	CHF C-77
	Pro[N]	14700	14700	14700	14700	14700	14700	14700	14700	14700	14700	14700	14700	14700	14700	14700	-	CVV C-83
	Pro[kgf]	1500	1500	1500	1500	1500	1500	1500	1500	1500	1500	1500	1500	1500	1500	1500	-	
6135	P_1[kW]	-	-	-	-	-	-	-	-	-	-	-	-	-	-	-	-	
	T_{OUT}[N•m]	607	764	940	940	940	940	940	900	940	940	940	967	1050	1040	979	-	CHH C-72
	T_{OUT}[kgf•m]	61.9	77.9	95.8	95.8	95.8	95.8	95.8	91.7	95.8	95.8	95.8	98.6	107	106	99.8	-	CHF C-77
	Pro[N]	14700	14700	14700	14700	14700	14700	14700	14700	14700	14700	14700	14700	14700	14700	14700	-	CVV C-83
	Pro[kgf]	1500	1500	1500	1500	1500	1500	1500	1500	1500	1500	1500	1500	1500	1500	1500	-	
6140	P_1[kW]	-	-	-	-	-	-	-	-	-	-	-	-	-	-	-	-	
	T_{OUT}[N•m]	717	1150	1230	1230	1230	1230	1230	1230	1230	1230	1230	1230	1230	1230	1230	-	CHH C-72
	T_{OUT}[kgf•m]	73.1	117	125	125	125	125	125	125	125	125	125	125	125	125	125	-	CHF C-77
	Pro[N]	16000	16000	16000	16000	16000	16000	16000	16000	16000	16000	16000	16000	16000	16000	16000	-	CVV C-83
	Pro[kgf]	1630	1630	1630	1630	1630	1630	1630	1630	1630	1630	1630	1630	1630	1630	1630	-	
6145	P_1[kW]	-	-	-	-	-	-	-	-	-	-	-	-	-	-	-	-	
	T_{OUT}[N•m]	717	1150	1290	1370	1360	1370	1340	1370	1370	1370	1370	1370	1370	1320	1250	-	CHH C-72
	T_{OUT}[kgf•m]	73.1	117	131	140	139	140	137	140	140	140	140	140	140	135	127	-	CHF C-77
	Pro[N]	16000	16000	16000	15900	16000	16000	16000	16000	15800	16000	15700	15700	16000	16000	16000	-	CVV C-83
	Pro[kgf]	1630	1630	1630	1620	1630	1630	1630	1630	1610	1630	1600	1600	1630	1630	1630	-	
6160	P_1[kW]	-	-	-	-	-	-	-	-	-	-	-	-	-	-	-	-	
	T_{OUT}[N•m]	1320	1760	1760	1760	1760	1760	1760	1760	1760	1760	1740	1760	1760	1760	1760	-	CHH C-72
	T_{OUT}[kgf•m]	135	179	179	179	179	179	179	179	179	179	177	179	179	179	179	-	CHF C-77
	Pro[N]	22100	22100	22100	22100	22100	22100	22100	22100	22100	22100	22100	22100	22100	22100	22100	-	CVV C-84
	Pro[kgf]	2250	2250	2250	2250	2250	2250	2250	2250	2250	2250	2250	2250	2250	2250	2250	-	
6165	P_1[kW]	-	-	-	-	-	-	-	-	-	-	-	-	-	-	-	-	
	T_{OUT}[N•m]	1320	1870	2100	2100	2100	2100	2100	2100	2100	2100	2100	2100	2100	2100	2050	-	CHH C-72
	T_{OUT}[kgf•m]	135	191	214	214	214	214	214	214	214	214	214	214	214	214	209	-	CHF C-77
	Pro[N]	22100	22100	22100	22100	22100	22100	22100	22100	22100	22100	22100	22100	22100	22100	21800	-	CVV C-84
	Pro[kgf]	2250	2250	2250	2250	2250	2250	2250	2250	2250	2250	2250	2250	2250	2250	2220	-	
6170	P_1[kW]	-	-	-	-	-	-	-	-	-	-	-	-	-	-	-	-	
	T_{OUT}[N•m]	1860	2530	2530	2530	2530	2530	2530	2530	2530	2530	2530	2530	2530	2530	2530	-	CHH C-72
	T_{OUT}[kgf•m]	190	258	258	258	258	258	258	258	258	258	258	258	258	258	258	-	CHF C-77
	Pro[N]	29500	29500	29500	29500	29500	29500	29500	29500	29500	29500	29500	29500	29500	29500	29500	-	CVV C-84
	Pro[kgf]	3010	3010	3010	3010	3010	3010	3010	3010	3010	3010	3010	3010	3010	3010	3010	-	
6175	P_1[kW]	-	-	-	-	-	-	-	-	-	-	-	-	-	-	-	-	
	T_{OUT}[N•m]	1860	2600	3150	3150	3150	3150	3150	3150	3150	3150	3150	3150	3150	3150	3150	-	CHH C-72
	T_{OUT}[kgf•m]	190	265	321	321	321	321	321	321	321	321	321	321	321	321	321	-	CHF C-77
	Pro[N]	29500	29500	29500	29500	29500	29500	29500	29500	29500	29500	29500	29500	29500	29500	29500	-	CVV C-84
	Pro[kgf]	3010	3010	3010	3010	3010	3010	3010	3010	3010	3010	3010	3010	3010	3010	3010	-	
6180	P_1[kW]	-	-	-	-	-	-	-	-	-	-	-	-	-	-	-	-	
	T_{OUT}[N•m]	-	-	4060	4060	4060	4060	4050	4050	4050	4050	4060	4050	4050	4050	4060	-	CHH C-72
	T_{OUT}[kgf•m]	-	-	414	414	414	414	413	413	413	413	414	413	413	413	414	-	CHF C-77
	Pro[N]	-	-	41700	41700	41700	41700	41700	41700	41700	41700	41700	41700	41700	41700	41700	-	CVV C-84
	Pro[kgf]	-	-	4250	4250	4250	4250	4250	4250	4250	4250	4250	4250	4250	4250	4250	-	
6185	P_1[kW]	-	-	-	-	-	-	-	-	-	-	-	-	-	-	-	-	
	T_{OUT}[N•m]	-	-	4810	4900	4920	5000	5000	5000	5000	5000	5000	5000	5000	4510	5000	-	CHH C-72
	T_{OUT}[kgf•m]	-	-	490	499	502	510	510	510	510	510	510	510	510	460	510	-	CHF C-77
	Pro[N]	-	-	41700	41700	41700	41700	41700	41700	41700	41700	41700	41700	41600	41700	41700	-	CVV C-84
	Pro[kgf]	-	-	4250	4250	4250	4250	4250	4250	4250	4250	4250	4250	4240	4250	4250	-	
6190	P_1[kW]	-	-	-	-	-	-	-	-	-	-	-	-	-	-	-	-	
	T_{OUT}[N•m]	-	-	6380	6380	6380	6380	6380	6380	6380	6380	6380	6380	6380	6380	6380	-	CHH C-72
	T_{OUT}[kgf•m]	-	-	650	650	650	650	650	650	650	650	650	650	650	650	650	-	CHF C-77
	Pro[N]	-	-	59000	58700	58900	59000	59000	59000	59000	59000	59000	58700	58600	58400	58900	-	CVV C-84
	Pro[kgf]	-	-	6010	5980	6000	6010	6010	6010	6010	6010	6010	5980	5970	5950	6000	-	
6195	P_1[kW]	-	-	-	-	-	-	-	-	-	-	-	-	-	-	-	-	
	T_{OUT}[N•m]	-	-	7580	7630	7910	7960	7960	7960	7960	7960	7960	7960	7960	7960	7960	-	CHH C-72
	T_{OUT}[kgf•m]	-	-	773	778	806	811	811	811	811	811	811	811	811	811	811	-	CHF C-77
	Pro[N]	-	-	59000	58200	58300	59000	59000	59000	59000	58600	59000	58200	58100	58000	58400	-	CVV C-84
	Pro[kgf]	-	-	6010	5930	5940	6010	6010	6010	6010	5970	6010	5930	5920	5910	5950	-	
Frame Size	Ratio[Z]	6	8	11	13	15	17	21	25	29	35	43	51	59	71	87	119	Page of Dim.
	n_2 [r/min]	8.33	6.25	4.55	3.85	3.33	2.94	2.38	2.00	1.72	1.43	1.16	0.980	0.847	0.704	0.575	0.420	

Note: 1. Allowable radial load Pro is the value at the midpoint of the output shaft. Refer to pages F-11~12 when radial load is off the midpoint of output shaft and for checking thrust load.
2. Refer to pages F-15~16 for allowable radial load for input shaft.

Selection Tables 6000 Series Reducer

Single Reduction Ratio 6 ~ 119 Frame Size: 6205 ~ 6275

Input Speed	n_1 = 50 r/min	n_1: Input Speed [r/min]	T_{out}: Allowable output torque [N·m, kgf·m]
		n_2: Output Speed [r/min]	Pro: Allowable output shaft radial load [N, kgf]
		P_1: Allowable input power [kW]	*Consult us for Pro of CNF and CHF type.

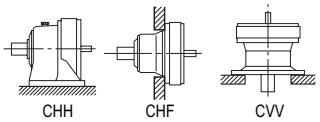

Frame Size	n_2 [r/min]	8.33	6.25	4.55	3.85	3.33	2.94	2.38	2.00	1.72	1.43	1.16	0.980	0.847	0.704	0.575	0.420	Page of Dim.
	Ratio[Z]	6	8	11	13	15	17	21	25	29	35	43	51	59	71	87	119	
6205	P_1[kW]	-	-	-	-	-	-	-	-	-	-	-	-	-	-	-	-	
	T_{OUT}[N•m]	-	-	8620	-	9270	-	9270	-	9230	-	9300	-	9300	-	8760	-	CHH C-72
	T_{OUT}[kgf•m]	-	-	879	-	945	-	945	-	941	-	948	-	948	-	893	-	CHF C-77
	Pro[N]	-	-	84100	-	84100	-	84100	-	84100	-	84100	-	84100	-	84100	-	CVV C-84
	Pro[kgf]	-	-	8570	-	8570	-	8570	-	8570	-	8570	-	8570	-	8570	-	
6215	P_1[kW]	-	-	-	-	-	-	-	-	-	-	-	-	-	-	-	-	
	T_{OUT}[N•m]	-	-	11400	-	12200	-	12500	-	12700	-	12700	-	12700	-	11300	-	CHH C-72
	T_{OUT}[kgf•m]	-	-	1160	-	1240	-	1270	-	1290	-	1290	-	1290	-	1150	-	CHF C-77
	Pro[N]	-	-	104000	-	104000	-	104000	-	104000	-	104000	-	104000	-	104000	-	CVV C-84
	Pro[kgf]	-	-	10600	-	10600	-	10600	-	10600	-	10600	-	10600	-	10600	-	
6225	P_1[kW]	-	-	-	-	-	-	-	-	-	-	-	-	-	-	-	-	
	T_{OUT}[N•m]	-	-	13500	-	14500	-	14800	-	15000	-	16000	-	15900	-	15100	-	CHH C-72
	T_{OUT}[kgf•m]	-	-	1380	-	1480	-	1510	-	1530	-	1630	-	1620	-	1540	-	CHF C-77
	Pro[N]	-	-	145000	-	145000	-	145000	-	145000	-	145000	-	145000	-	145000	-	CVV C-84
	Pro[kgf]	-	-	14800	-	14800	-	14800	-	14800	-	14800	-	14800	-	14800	-	
6235	P_1[kW]	-	-	-	-	-	-	-	-	-	-	-	-	-	-	-	-	
	T_{OUT}[N•m]	-	-	18700	-	19600	-	18900	-	18900	-	20500	-	20500	-	17200	-	CHH C-72
	T_{OUT}[kgf•m]	-	-	1910	-	2000	-	1930	-	1930	-	2090	-	2090	-	1750	-	CHF C-77
	Pro[N]	-	-	179000	-	179000	-	179000	-	179000	-	179000	-	179000	-	179000	-	CVV C-84
	Pro[kgf]	-	-	18200	-	18200	-	18200	-	18200	-	18200	-	18200	-	18200	-	
6245	P_1[kW]	-	-	-	-	-	-	-	-	-	-	-	-	-	-	-	-	
	T_{OUT}[N•m]	-	-	20500	-	26200	-	25800	-	25800	-	25800	-	25800	-	22600	-	CHH C-72
	T_{OUT}[kgf•m]	-	-	2090	-	2670	-	2630	-	2630	-	2630	-	2630	-	2300	-	CHF C-77
	Pro[N]	-	-	208000	-	208000	-	208000	-	208000	-	208000	-	208000	-	208000	-	CVV C-84
	Pro[kgf]	-	-	21200	-	21200	-	21200	-	21200	-	21200	-	21200	-	21200	-	
6255	P_1[kW]	-	-	-	-	-	-	-	-	-	-	-	-	-	-	-	-	
	T_{OUT}[N•m]	-	-	27500	-	31200	-	31000	-	32500	-	34500	-	34500	-	31000	-	CHH C-72
	T_{OUT}[kgf•m]	-	-	2800	-	3180	-	3160	-	3310	-	3520	-	3520	-	3160	-	CHF C-77
	Pro[N]	-	-	257000	-	258000	-	258000	-	258000	-	258000	-	258000	-	258000	-	CVV C-84
	Pro[kgf]	-	-	26200	-	26300	-	26300	-	26300	-	26300	-	26300	-	26300	-	
6265	P_1[kW]	-	-	-	-	-	-	-	-	-	-	-	-	-	-	-	-	
	T_{OUT}[N•m]	-	-	31300	-	43700	-	46000	-	46000	-	46000	-	46000	-	44000	-	CHH C-72
	T_{OUT}[kgf•m]	-	-	3190	-	4450	-	4690	-	4690	-	4690	-	4690	-	4490	-	CHF C-77
	Pro[N]	-	-	276000	-	276000	-	276000	-	276000	-	276000	-	276000	-	276000	-	CVV C-84
	Pro[kgf]	-	-	28100	-	28100	-	28100	-	28100	-	28100	-	28100	-	28100	-	
6275	P_1[kW]	-	-	-	-	-	-	-	-	-	-	-	-	-	-	-	-	
	T_{OUT}[N•m]	-	-	-	-	-	-	-	-	68200	-	68200	-	68200	-	68200	-	CHH C-72
	T_{OUT}[kgf•m]	-	-	-	-	-	-	-	-	6950	-	6950	-	6950	-	6950	-	
	Pro[N]	-	-	-	-	-	-	-	-	248000	-	248000	-	248000	-	245000	-	CVV C-84
	Pro[kgf]	-	-	-	-	-	-	-	-	25300	-	25300	-	25300	-	25000	-	
Frame Size	Ratio[Z]	6	8	11	13	15	17	21	25	29	35	43	51	59	71	87	119	Page of Dim.
	n_2 [r/min]	8.33	6.25	4.55	3.85	3.33	2.94	2.38	2.00	1.72	1.43	1.16	0.980	0.847	0.704	0.575	0.420	

Note: 1. Allowable radial load Pro is the value at the midpoint of the output shaft. Refer to pages F-11~12 when radial load is off the midpoint of output shaft and for checking thrust load.
2. Refer to pages F-15~16 for allowable radial load for input shaft.

M E M O

Selection Tables 6000 Series Reducer

Single Reduction Ratio 6 ~ 119 Frame Size: 6060 ~ 6120

Input Speed	n_1 = 580 r/min	n_1: Input Speed [r/min]	T_{out}: Allowable output torque [N·m, kgf·m]
		n_2: Output Speed [r/min]	Pro: Allowable output shaft radial load [N, kgf]
		P_1: Allowable input power [kW]	*Consult us for Pro of CNF and CHF type.

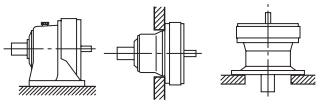

Frame Size	n_2 [r/min]	96.7	72.5	52.7	44.6	38.7	34.1	27.6	23.2	20.0	16.6	13.5	11.4	9.83	8.17	6.67	4.87	Page of Dim.
	Ratio[Z]	6	8	11	13	15	17	21	25	29	35	43	51	59	71	87	119	
6060	P_1[kW]	0.200	0.192	0.139	0.118	0.102	0.090	0.073	0.061	0.053	0.044	0.036	-	-	-	-	-	
	T_{OUT}[N•m]	18.8	24.0	24.0	24.0	24.0	24.0	24.0	24.0	24.0	24.0	24.0	-	-	-	-	-	CNH C-71
	T_{OUT}[kgf•m]	1.92	2.45	2.45	2.45	2.45	2.45	2.45	2.45	2.45	2.45	2.45	-	-	-	-	-	CNF C-76
	Pro[N]	1020	1010	1180	1180	1180	1180	1180	1180	1180	1180	1180	-	-	-	-	-	CNV C-82
	Pro[kgf]	104	103	120	120	120	120	120	120	120	120	120	-	-	-	-	-	
6065	P_1[kW]	0.267	0.216	0.174	0.148	0.128	0.113	0.091	0.077	0.066	0.055	0.045	-	-	-	-	-	
	T_{OUT}[N•m]	25.0	27.1	30.0	30.0	30.0	30.0	30.0	30.0	30.0	30.0	30.0	-	-	-	-	-	CNH C-71
	T_{OUT}[kgf•m]	2.55	2.76	3.06	3.06	3.06	3.06	3.06	3.06	3.06	3.06	3.06	-	-	-	-	-	CNF C-76
	Pro[N]	958	974	1140	1180	1180	1180	1180	1180	1180	1180	1180	-	-	-	-	-	CNV C-82
	Pro[kgf]	97.7	99.3	116	120	120	120	120	120	120	120	120	-	-	-	-	-	
6070	P_1[kW]	0.316	0.288	0.262	0.221	0.192	0.169	0.137	0.115	0.099	0.082	0.067	0.056	0.049	-	-	-	
	T_{OUT}[N•m]	29.7	36.1	45.0	45.0	45.0	45.0	45.0	45.0	45.0	45.0	45.0	45.0	45.0	-	-	-	CNH C-71
	T_{OUT}[kgf•m]	3.03	3.68	4.59	4.59	4.59	4.59	4.59	4.59	4.59	4.59	4.59	4.59	4.59	-	-	-	CNF C-76
	Pro[N]	1770	1770	1770	1770	1770	1770	1770	1770	1770	1770	1770	1750	1770	-	-	-	CNV C-82
	Pro[kgf]	180	180	180	180	180	180	180	180	180	180	180	178	180	-	-	-	
6075	P_1[kW]	0.316	0.288	0.291	0.273	0.256	0.226	0.183	0.153	0.132	0.110	0.089	0.071	0.062	-	-	-	
	T_{OUT}[N•m]	29.7	36.1	50.1	55.5	60.0	60.0	60.0	60.0	60.0	60.0	60.0	56.9	57.4	-	-	-	CNH C-71
	T_{OUT}[kgf•m]	3.03	3.68	5.11	5.66	6.12	6.12	6.12	6.12	6.12	6.12	6.12	5.80	5.85	-	-	-	CNF C-76
	Pro[N]	1770	1770	1770	1770	1770	1770	1770	1770	1770	1770	1660	1580	1580	-	-	-	CNV C-82
	Pro[kgf]	180	180	180	180	180	180	180	180	180	180	169	161	161	-	-	-	
6080	P_1[kW]	0.592	0.592	0.465	0.393	0.341	0.301	0.235	0.205	0.176	0.146	0.119	0.100	0.087	0.072	0.059	-	
	T_{OUT}[N•m]	55.6	74.1	80.0	80.0	80.0	80.0	77.2	80.0	80.0	80.0	80.0	80.0	80.0	80.0	80.0	-	CNH C-71
	T_{OUT}[kgf•m]	5.67	7.55	8.15	8.15	8.15	8.15	7.87	8.15	8.15	8.15	8.15	8.15	8.15	8.15	8.15	-	CNF C-76
	Pro[N]	2540	2560	2560	2560	2560	2560	2560	2560	2500	2560	2540	2480	2510	2460	2450	-	CNV C-82
	Pro[kgf]	259	261	261	261	261	261	261	261	255	261	259	253	256	251	250	-	
6085	P_1[kW]	0.778	0.778	0.581	0.492	0.426	0.376	0.235	0.256	0.220	0.183	0.149	0.125	0.108	0.090	0.073	-	
	T_{OUT}[N•m]	73.0	97.3	100	100	100	100	77.2	100	100	100	100	100	100	100	100	-	CNH C-71
	T_{OUT}[kgf•m]	7.44	9.92	10.2	10.2	10.2	10.2	7.87	10.2	10.2	10.2	10.2	10.2	10.2	10.2	10.2	-	CNF C-76
	Pro[N]	2510	2560	2560	2560	2560	2560	2560	2360	2300	2420	2340	2290	2310	2260	2260	-	CNV C-82
	Pro[kgf]	256	261	261	261	261	261	261	241	234	247	239	233	235	230	230	-	
6090	P_1[kW]	1.15	1.15	0.872	0.738	0.639	0.564	0.457	0.384	0.331	0.274	0.223	0.186	0.158	0.119	0.110	0.058	
	T_{OUT}[N•m]	108	143	150	150	150	150	150	150	150	150	150	149	146	132	150	108	CNH C-71
	T_{OUT}[kgf•m]	11.0	14.6	15.3	15.3	15.3	15.3	15.3	15.3	15.3	15.3	15.3	15.2	14.9	13.5	15.3	11.0	CNF C-76
	Pro[N]	3340	3340	3340	3340	3340	3340	3340	3280	3290	3300	3310	3280	3300	3310	3310	3310	CNV C-82
	Pro[kgf]	340	340	340	340	340	340	340	334	335	336	337	334	336	337	337	337	
6095	P_1[kW]	1.47	1.34	1.05	0.984	0.852	0.752	0.609	0.499	0.441	0.365	0.297	0.192	0.158	0.119	0.131	0.058	
	T_{OUT}[N•m]	138	168	181	200	200	200	200	195	200	200	200	153	146	132	178	108	CNH C-71
	T_{OUT}[kgf•m]	14.1	17.1	18.5	20.4	20.4	20.4	20.4	19.9	20.4	20.4	20.4	15.6	14.9	13.5	18.1	11.0	CNF C-76
	Pro[N]	3340	3340	3340	3340	3340	3340	3340	3190	3200	3200	3220	3280	3300	3310	3270	3310	CNV C-82
	Pro[kgf]	340	340	340	340	340	340	340	325	326	326	328	334	336	337	333	337	
6100	P_1[kW]	1.82	1.86	1.45	1.23	1.07	0.940	0.761	0.639	0.551	0.457	0.372	0.313	0.271	0.225	0.184	0.134	
	T_{OUT}[N•m]	171	233	250	250	250	250	250	250	250	250	250	250	250	250	250	250	CNH C-71
	T_{OUT}[kgf•m]	17.4	23.8	25.5	25.5	25.5	25.5	25.5	25.5	25.5	25.5	25.5	25.5	25.5	25.5	25.5	25.5	CNF C-76
	Pro[N]	5400	5400	5400	5400	5400	5400	5400	5400	5400	5400	5400	5400	5400	5380	5400	5360	CNV C-82
	Pro[kgf]	550	550	550	550	550	550	550	550	550	550	550	550	550	548	550	546	
6105	P_1[kW]	1.82	1.86	1.79	1.48	1.28	1.13	0.913	0.767	0.661	0.548	0.446	0.372	0.321	0.238	0.220	0.139	
	T_{OUT}[N•m]	171	233	308	300	300	300	300	300	300	300	300	297	296	264	300	258	CNH C-71
	T_{OUT}[kgf•m]	17.4	23.8	31.4	30.6	30.6	30.6	30.6	30.6	30.6	30.6	30.6	30.3	30.2	26.9	30.6	26.3	CNF C-76
	Pro[N]	5400	5400	5400	5400	5400	5400	5400	5400	5400	5400	5400	5310	5090	5370	4780	5350	CNV C-82
	Pro[kgf]	550	550	550	550	550	550	550	550	550	550	550	541	519	547	487	545	
6110	P_1[kW]	2.06	2.88	2.09	1.77	1.53	1.35	1.10	0.921	0.794	0.658	0.535	0.451	0.390	0.324	0.265	-	
	T_{OUT}[N•m]	193	360	360	360	360	360	360	360	360	360	360	360	360	360	360	-	CNH C-71
	T_{OUT}[kgf•m]	19.7	36.7	36.7	36.7	36.7	36.7	36.7	36.7	36.7	36.7	36.7	36.7	36.7	36.7	36.7	-	CNF C-76
	Pro[N]	6210	6780	7610	7610	7610	7610	7610	7340	7200	7280	7590	7590	7610	7580	7600	-	CNV C-82
	Pro[kgf]	633	691	776	776	776	776	776	748	734	742	774	774	776	773	775	-	
6115	P_1[kW]	2.06	3.25	2.44	2.07	1.79	1.58	1.28	1.07	0.926	0.767	0.624	0.526	0.455	0.378	0.309	-	
	T_{OUT}[N•m]	193	406	420	420	420	420	420	420	420	420	420	420	420	420	420	-	CNH C-71
	T_{OUT}[kgf•m]	19.7	41.4	42.8	42.8	42.8	42.8	42.8	42.8	42.8	42.8	42.8	42.8	42.8	42.8	42.8	-	CNF C-76
	Pro[N]	6210	6720	7610	7600	7610	7500	7460	7150	7010	7090	7370	7410	7430	7390	7410	-	CNV C-82
	Pro[kgf]	633	685	776	775	776	765	760	729	715	723	751	755	757	753	755	-	
6120	P_1[kW]	3.90	4.00	3.05	2.58	2.24	1.96	1.59	1.34	1.15	0.959	0.781	0.658	0.569	0.473	0.386	-	
	T_{OUT}[N•m]	366	501	525	525	525	520	522	525	520	525	525	525	525	525	525	-	CNH C-71
	T_{OUT}[kgf•m]	37.3	51.1	53.5	53.5	53.5	53.0	53.2	53.5	53.0	53.5	53.5	53.5	53.5	53.5	53.5	-	CNF C-76
	Pro[N]	6880	7620	8740	9090	9810	9810	9810	9810	9810	9810	9810	9810	9810	9810	9780	-	CNV C-82
	Pro[kgf]	701	777	891	927	1000	1000	1000	1000	1000	1000	1000	1000	1000	1000	997	-	
Frame Size	Ratio[Z]	6	8	11	13	15	17	21	25	29	35	43	51	59	71	87	119	Page of Dim.
	n_2 [r/min]	96.7	72.5	52.7	44.6	38.7	34.1	27.6	23.2	20.0	16.6	13.5	11.4	9.83	8.17	6.67	4.87	

Note: 1. Allowable radial load Pro is the value at the midpoint of the output shaft. Refer to pages F-11~12 when radial load is off the midpoint of output shaft and for checking thrust load.
2. Refer to pages F-15~16 for allowable radial load for input shaft.

Selection Tables 6000 Series Reducer

Single Reduction Ratio 6 ~ 119 Frame Size: 6125 ~ 6195

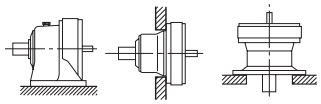

n_1: Input Speed [r/min]
n_2: Output Speed [r/min]
P_1: Allowable input power [kW]
T_{out}: Allowable output torque [N·m, kgf·m]
Pro: Allowable output shaft radial load [N, kgf]
*Consult us for Pro of CNF and CHF type.

Input Speed n_1 = 580 r/min

Frame Size	n_2 [r/min]	96.7	72.5	52.7	44.6	38.7	34.1	27.6	23.2	20.0	16.6	13.5	11.4	9.83	8.17	6.67	4.87	Page of Dim.
	Ratio[Z]	6	8	11	13	15	17	21	25	29	35	43	51	59	71	87	119	
6125	P_1[kW]	3.90	4.00	3.47	3.10	2.69	2.37	1.92	1.61	1.39	1.15	0.937	0.790	0.683	0.533	0.463	-	
	T_{OUT}[N•m]	366	501	596	630	630	630	630	630	630	630	630	630	630	592	630	-	CNH C-71
	T_{OUT}[kgf•m]	37.3	51.1	60.8	64.2	64.2	64.2	64.2	64.2	64.2	64.2	64.2	64.2	64.2	60.3	64.2	-	CNF C-76
	Pro[N]	6880	7620	8670	8980	9710	9810	9810	9810	9810	9810	9810	9810	9810	9810	9560	-	CNV C-82
	Pro[kgf]	701	777	884	915	990	1000	1000	1000	1000	1000	1000	1000	1000	1000	975	-	
6130	P_1[kW]	5.91	5.94	4.53	3.84	3.32	2.93	2.37	1.99	1.72	1.42	1.16	1.16	0.988	0.813	0.623	-	
	T_{OUT}[N•m]	555	744	780	780	780	780	780	780	780	780	780	928	912	902	848	-	CHH C-72
	T_{OUT}[kgf•m]	56.6	75.8	79.5	79.5	79.5	79.5	79.5	79.5	79.5	79.5	79.5	94.6	93.0	91.9	86.4	-	CHF C-77
	Pro[N]	7930	8800	10200	10700	11000	11800	12700	13300	14000	14700	14700	14700	14700	14700	14700	-	CVV C-83
	Pro[kgf]	808	897	1040	1090	1120	1200	1290	1360	1430	1500	1500	1500	1500	1500	1500	-	
6135	P_1[kW]	6.47	6.11	5.46	4.62	4.01	3.53	2.86	2.30	2.07	1.72	1.40	1.21	1.14	0.938	0.719	-	
	T_{OUT}[N•m]	607	764	940	940	940	940	940	900	940	940	940	967	1050	1040	979	-	CHH C-72
	T_{OUT}[kgf•m]	61.9	77.9	95.8	95.8	95.8	95.8	95.8	91.7	95.8	95.8	95.8	98.6	107	106	99.8	-	CHF C-77
	Pro[N]	7870	8780	10100	10600	10900	11700	12600	13200	13900	14700	14700	14700	14700	14700	14700	-	CVV C-83
	Pro[kgf]	802	895	1030	1080	1110	1190	1280	1350	1420	1500	1500	1500	1500	1500	1500	-	
6140	P_1[kW]	7.64	7.80	7.12	6.02	5.22	4.61	3.73	3.13	2.70	2.24	1.82	1.54	1.33	1.10	0.900	-	
	T_{OUT}[N•m]	717	976	1230	1230	1230	1230	1230	1230	1230	1230	1230	1230	1230	1230	1230	-	CHH C-72
	T_{OUT}[kgf•m]	73.1	99.5	125	125	125	125	125	125	125	125	125	125	125	125	125	-	CHF C-77
	Pro[N]	12100	13400	15000	15500	16000	16000	16000	16000	16000	16000	16000	16000	16000	16000	16000	-	CVV C-83
	Pro[kgf]	1230	1370	1530	1580	1630	1630	1630	1630	1630	1630	1630	1630	1630	1630	1630	-	
6145	P_1[kW]	7.64	7.80	7.51	6.74	5.79	5.15	4.07	3.50	3.02	2.50	2.04	1.72	1.48	1.19	0.917	-	
	T_{OUT}[N•m]	717	976	1290	1370	1360	1370	1340	1370	1370	1370	1370	1370	1370	1320	1250	-	CHH C-72
	T_{OUT}[kgf•m]	73.1	99.5	131	140	139	140	137	140	140	140	140	140	140	135	127	-	CHF C-77
	Pro[N]	12100	13400	15000	15400	16000	16000	16000	16000	15800	16000	15700	15700	16000	16000	16000	-	CVV C-83
	Pro[kgf]	1230	1370	1530	1570	1630	1630	1630	1630	1610	1630	1600	1600	1630	1630	1630	-	
6160	P_1[kW]	14.1	14.0	10.2	8.63	7.48	6.60	5.34	4.49	3.87	3.21	2.58	2.20	1.90	1.58	1.29	-	
	T_{OUT}[N•m]	1320	1760	1760	1760	1760	1760	1760	1760	1760	1760	1740	1760	1760	1760	1760	-	CHH C-72
	T_{OUT}[kgf•m]	135	179	179	179	179	179	179	179	179	179	177	179	179	179	179	-	CHF C-77
	Pro[N]	13500	15000	17300	18200	19400	20100	21700	22100	22100	22100	22100	22100	22100	22100	22100	-	CVV C-84
	Pro[kgf]	1380	1530	1760	1860	1980	2050	2210	2250	2250	2250	2250	2250	2250	2250	2250	-	
6165	P_1[kW]	14.1	14.9	12.2	10.3	8.95	7.90	6.39	5.37	4.63	3.84	3.12	2.63	2.28	1.89	1.51	-	
	T_{OUT}[N•m]	1320	1870	2100	2100	2100	2100	2100	2100	2100	2100	2100	2100	2100	2100	2050	-	CHH C-72
	T_{OUT}[kgf•m]	135	191	214	214	214	214	214	214	214	214	214	214	214	214	209	-	CHF C-77
	Pro[N]	13500	14900	17000	18000	19200	19900	21500	22100	22100	22100	22100	22100	22100	22100	21800	-	CVV C-84
	Pro[kgf]	1380	1520	1730	1830	1960	2030	2190	2250	2250	2250	2250	2250	2250	2250	2220	-	
6170	P_1[kW]	19.8	20.2	14.7	12.4	10.8	9.51	7.70	6.47	5.58	4.62	3.76	3.17	2.74	2.28	1.86	-	
	T_{OUT}[N•m]	1860	2530	2530	2530	2530	2530	2530	2530	2530	2530	2530	2530	2530	2530	2530	-	CHH C-72
	T_{OUT}[kgf•m]	190	258	258	258	258	258	258	258	258	258	258	258	258	258	258	-	CHF C-77
	Pro[N]	15100	16500	19300	20300	21400	22400	24400	25400	26900	28700	29500	29500	29500	29500	29500	-	CVV C-84
	Pro[kgf]	1540	1680	1970	2070	2180	2280	2490	2590	2740	2930	3010	3010	3010	3010	3010	-	
6175	P_1[kW]	19.8	20.8	18.3	15.5	13.4	11.8	9.59	8.06	6.94	5.75	4.68	3.95	3.41	2.84	2.31	-	
	T_{OUT}[N•m]	1860	2600	3150	3150	3150	3150	3150	3150	3150	3150	3150	3150	3150	3150	3150	-	CHH C-72
	T_{OUT}[kgf•m]	190	265	321	321	321	321	321	321	321	321	321	321	321	321	321	-	CHF C-77
	Pro[N]	15100	16500	18900	19900	21000	22000	24100	25100	26600	28400	29500	29500	29500	29500	29500	-	CVV C-84
	Pro[kgf]	1540	1680	1930	2030	2140	2240	2460	2560	2710	2900	3010	3010	3010	3010	3010	-	
6180	P_1[kW]	-	-	23.6	20.0	17.3	15.3	12.3	10.4	8.93	7.40	6.03	5.08	4.39	3.65	2.98	-	
	T_{OUT}[N•m]	-	-	4060	4060	4060	4060	4050	4050	4050	4050	4060	4050	4050	4050	4060	-	CHH C-72
	T_{OUT}[kgf•m]	-	-	414	414	414	414	413	413	413	413	414	413	413	413	414	-	CHF C-77
	Pro[N]	-	-	25600	26700	28300	30000	32600	34000	35700	38200	41200	41700	41700	41700	41700	-	CVV C-84
	Pro[kgf]	-	-	2610	2720	2880	3060	3320	3470	3640	3890	4200	4250	4250	4250	4250	-	
6185	P_1[kW]	-	-	27.9	24.1	19.9	18.8	15.2	12.8	11.0	9.13	7.43	6.27	5.42	4.06	3.67	-	
	T_{OUT}[N•m]	-	-	4810	4900	4670	5000	5000	5000	5000	5000	5000	5000	5000	4510	5000	-	CHH C-72
	T_{OUT}[kgf•m]	-	-	490	499	476	510	510	510	510	510	510	510	510	460	510	-	CHF C-77
	Pro[N]	-	-	25200	26400	28000	29600	32200	33600	35300	37900	40800	41700	41600	41700	41700	-	CVV C-84
	Pro[kgf]	-	-	2570	2690	2850	3020	3280	3430	3600	3860	4160	4250	4240	4250	4250	-	
6190	P_1[kW]	-	-	37.1	31.4	27.2	24.0	19.4	16.3	14.1	11.7	9.49	8.00	6.91	5.74	4.69	-	
	T_{OUT}[N•m]	-	-	6380	6380	6380	6380	6380	6380	6380	6380	6380	6380	6380	6380	6380	-	CHH C-72
	T_{OUT}[kgf•m]	-	-	650	650	650	650	650	650	650	650	650	650	650	650	650	-	CHF C-77
	Pro[N]	-	-	35500	37100	39100	41500	45100	47400	49900	52900	57200	58700	58600	58400	58900	-	CVV C-84
	Pro[kgf]	-	-	3620	3780	3990	4230	4600	4830	5090	5390	5830	5980	5970	5950	6000	-	
6195	P_1[kW]	-	-	44.0	36.1	33.2	29.9	24.2	20.4	17.5	14.5	11.8	9.98	8.63	7.17	5.85	-	
	T_{OUT}[N•m]	-	-	7570	7350	7800	7960	7960	7960	7960	7960	7960	7960	7960	7960	7960	-	CHH C-72
	T_{OUT}[kgf•m]	-	-	772	749	795	811	811	811	811	811	811	811	811	811	811	-	CHF C-77
	Pro[N]	-	-	35100	36700	38600	41000	44600	46900	49500	52500	56700	58200	58100	58000	58400	-	CVV C-84
	Pro[kgf]	-	-	3580	3740	3930	4180	4550	4780	5050	5350	5780	5930	5920	5910	5950	-	
Frame Size	Ratio[Z]	6	8	11	13	15	17	21	25	29	35	43	51	59	71	87	119	Page of Dim.
	n_2 [r/min]	96.7	72.5	52.7	44.6	38.7	34.1	27.6	23.2	20.0	16.6	13.5	11.4	9.83	8.17	6.67	4.87	

Note: 1. Allowable radial load Pro is the value at the midpoint of the output shaft. Refer to pages F-11~12 when radial load is off the midpoint of output shaft and for checking thrust load.
2. Refer to pages F-15~16 for allowable radial load for input shaft.

Selection Tables 6000 Series Reducer

Single Reduction Ratio 6 ~ 119 Frame Size: 6205 ~ 6275

Input Speed	n_1 = 580 r/min	n_1: Input Speed [r/min]	T_{out}: Allowable output torque [N·m, kgf·m]
		n_2: Output Speed [r/min]	Pro: Allowable output shaft radial load [N, kgf]
		P_1: Allowable input power [kW]	*Consult us for Pro of CNF and CHF type.

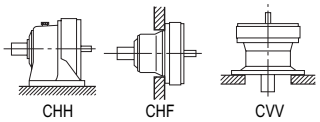

Frame Size	n_2 [r/min]	96.7	72.5	52.7	44.6	38.7	34.1	27.6	23.2	20.0	16.6	13.5	11.4	9.83	8.17	6.67	4.87	Page of Dim.
	Ratio[Z]	6	8	11	13	15	17	21	25	29	35	43	51	59	71	87	119	
6205	P_1[kW]	-	-	46.8	-	39.5	-	28.2	-	20.3	-	13.8	-	10.1	-	6.43	-	
	T_{OUT}[N•m]	-	-	8050	-	9270	-	9270	-	9230	-	9300	-	9300	-	8760	-	CHH C-72
	T_{OUT}[kgf•m]	-	-	821	-	945	-	945	-	941	-	948	-	948	-	893	-	CHF C-77
	Pro[N]	-	-	67300	-	72500	-	81600	-	84100	-	84100	-	84100	-	84100	-	CVV C-84
	Pro[kgf]	-	-	6860	-	7390	-	8320	-	8570	-	8570	-	8570	-	8570	-	
6215	P_1[kW]	-	-	64.0	-	51.9	-	38.1	-	27.9	-	18.8	-	13.7	-	8.28	-	
	T_{OUT}[N•m]	-	-	11000	-	12200	-	12500	-	12700	-	12700	-	12700	-	11300	-	CHH C-72
	T_{OUT}[kgf•m]	-	-	1120	-	1240	-	1270	-	1290	-	1290	-	1290	-	1150	-	CHF C-77
	Pro[N]	-	-	67300	-	72600	-	82500	-	90200	-	102000	-	104000	-	104000	-	CVV C-84
	Pro[kgf]	-	-	6860	-	7400	-	8410	-	9190	-	10400	-	10600	-	10600	-	
6225	P_1[kW]	-	-	74.7	-	61.7	-	45.1	-	33.2	-	23.8	-	17.2	-	11.1	-	
	T_{OUT}[N•m]	-	-	12900	-	14500	-	14800	-	15000	-	16000	-	15900	-	15100	-	CHH C-72
	T_{OUT}[kgf•m]	-	-	1310	-	1480	-	1510	-	1530	-	1630	-	1620	-	1540	-	CHF C-77
	Pro[N]	-	-	71100	-	77100	-	86900	-	95200	-	108000	-	118000	-	133000	-	CVV C-84
	Pro[kgf]	-	-	7250	-	7860	-	8860	-	9700	-	11000	-	12000	-	13600	-	
6235	P_1[kW]	-	-	99.9	-	83.6	-	57.5	-	41.7	-	30.5	-	22.2	-	12.6	-	
	T_{OUT}[N•m]	-	-	17200	-	19600	-	18900	-	18900	-	20500	-	20500	-	17200	-	CHH C-72
	T_{OUT}[kgf•m]	-	-	1750	-	2000	-	1930	-	1930	-	2090	-	2090	-	1750	-	CHF C-77
	Pro[N]	-	-	88800	-	95300	-	108000	-	119000	-	133000	-	146000	-	166000	-	CVV C-84
	Pro[kgf]	-	-	9050	-	9710	-	11000	-	12100	-	13600	-	14900	-	16900	-	
6245	P_1[kW]	-	-	117	-	112	-	78.5	-	56.9	-	38.4	-	28.0	-	16.6	-	
	T_{OUT}[N•m]	-	-	20200	-	26200	-	25800	-	25800	-	25800	-	25800	-	22600	-	CHH C-72
	T_{OUT}[kgf•m]	-	-	2060	-	2670	-	2630	-	2630	-	2630	-	2630	-	2300	-	CHF C-77
	Pro[N]	-	-	98600	-	106000	-	119000	-	131000	-	149000	-	163000	-	185000	-	CVV C-84
	Pro[kgf]	-	-	10100	-	10800	-	12100	-	13400	-	15200	-	16600	-	18900	-	
6255	P_1[kW]	-	-	151	-	133	-	94.4	-	71.6	-	51.3	-	37.4	-	22.8	-	
	T_{OUT}[N•m]	-	-	25900	-	31200	-	31000	-	32500	-	34500	-	34500	-	31000	-	CHH C-72
	T_{OUT}[kgf•m]	-	-	2640	-	3180	-	3160	-	3310	-	3520	-	3520	-	3160	-	CHF C-77
	Pro[N]	-	-	121000	-	130000	-	146000	-	161000	-	182000	-	200000	-	226000	-	CVV C-84
	Pro[kgf]	-	-	12300	-	13300	-	14900	-	16400	-	18600	-	20400	-	23000	-	
6265	P_1[kW]	-	-	175	-	175	-	140	-	101	-	68.4	-	49.8	-	32.3	-	
	T_{OUT}[N•m]	-	-	30100	-	41000	-	46000	-	46000	-	46000	-	46000	-	44000	-	CHH C-72
	T_{OUT}[kgf•m]	-	-	3070	-	4180	-	4690	-	4690	-	4690	-	4690	-	4490	-	CHF C-77
	Pro[N]	-	-	148000	-	158000	-	177000	-	197000	-	222000	-	243000	-	274000	-	CVV C-84
	Pro[kgf]	-	-	15100	-	16100	-	18000	-	20100	-	22600	-	24800	-	27900	-	
6275	P_1[kW]	-	-	-	-	-	-	-	-	150	-	101	-	73.9	-	50.1	-	
	T_{OUT}[N•m]	-	-	-	-	-	-	-	-	68200	-	68200	-	68200	-	68200	-	CHH C-72
	T_{OUT}[kgf•m]	-	-	-	-	-	-	-	-	6950	-	6950	-	6950	-	6950	-	
	Pro[N]	-	-	-	-	-	-	-	-	228000	-	248000	-	248000	-	245000	-	CVV C-84
	Pro[kgf]	-	-	-	-	-	-	-	-	23200	-	25300	-	25300	-	25000	-	
Frame Size	Ratio[Z]	6	8	11	13	15	17	21	25	29	35	43	51	59	71	87	119	Page of Dim.
	n_2 [r/min]	96.7	72.5	52.7	44.6	38.7	34.1	27.6	23.2	20.0	16.6	13.5	11.4	9.83	8.17	6.67	4.87	

Note: 1. Allowable radial load Pro is the value at the midpoint of the output shaft. Refer to pages F-11~12 when radial load is off the midpoint of output shaft and for checking thrust load.
2. Refer to pages F-15~16 for allowable radial load for input shaft.

MEMO

Selection Tables 6000 Series Reducer

Single Reduction Ratio 6 ~ 119 Frame Size: 6060 ~ 6120

Input Speed	n_1 = 720 r/min	n_1: Input Speed [r/min]	T_{out}: Allowable output torque [N·m, kgf·m]
		n_2: Output Speed [r/min]	Pro: Allowable output shaft radial load [N, kgf]
		P_1: Allowable input power [kW]	*Consult us for Pro of CNF and CHF type.

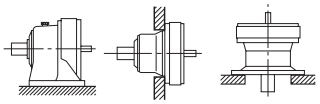

Frame Size	n_2 [r/min]	120	90.0	65.5	55.4	48.0	42.4	34.3	28.8	24.8	20.6	16.7	14.1	12.2	10.1	8.28	6.05	Page of Dim.
	Ratio[Z]	6	8	11	13	15	17	21	25	29	35	43	51	59	71	87	119	
6060	P_1[kW]	0.200	0.200	0.173	0.147	0.127	0.112	0.091	0.076	0.066	0.054	0.044	-	-	-	-	-	
	T_{OUT}[N•m]	15.1	20.2	24.0	24.0	24.0	24.0	24.0	24.0	24.0	24.0	24.0	-	-	-	-	-	CNH C-71
	T_{OUT}[kgf•m]	1.54	2.06	2.45	2.45	2.45	2.45	2.45	2.45	2.45	2.45	2.45	-	-	-	-	-	CNF C-76
	Pro[N]	999	1050	1180	1180	1180	1180	1180	1180	1180	1180	1180	-	-	-	-	-	CNV C-82
	Pro[kgf]	102	107	120	120	120	120	120	120	120	120	120	-	-	-	-	-	
6065	P_1[kW]	0.286	0.259	0.216	0.183	0.159	0.140	0.113	0.095	0.082	0.068	0.055	-	-	-	-	-	
	T_{OUT}[N•m]	21.6	26.1	30.0	30.0	30.0	30.0	30.0	30.0	30.0	30.0	30.0	-	-	-	-	-	CNH C-71
	T_{OUT}[kgf•m]	2.20	2.66	3.06	3.06	3.06	3.06	3.06	3.06	3.06	3.06	3.06	-	-	-	-	-	CNF C-76
	Pro[N]	987	985	1140	1180	1180	1180	1180	1180	1180	1180	1180	-	-	-	-	-	CNV C-82
	Pro[kgf]	101	100	116	120	120	120	120	120	120	120	120	-	-	-	-	-	
6070	P_1[kW]	0.347	0.325	0.325	0.275	0.238	0.210	0.170	0.143	0.123	0.102	0.083	0.070	0.061	-	-	-	
	T_{OUT}[N•m]	26.2	32.8	45.0	45.0	45.0	45.0	45.0	45.0	45.0	45.0	45.0	45.0	45.0	-	-	-	CNH C-71
	T_{OUT}[kgf•m]	2.67	3.34	4.59	4.59	4.59	4.59	4.59	4.59	4.59	4.59	4.59	4.59	4.59	-	-	-	CNF C-76
	Pro[N]	1710	1770	1770	1770	1770	1770	1770	1770	1770	1770	1770	1750	1770	-	-	-	CNV C-82
	Pro[kgf]	174	180	180	180	180	180	180	180	180	180	180	178	180	-	-	-	
6075	P_1[kW]	0.376	0.325	0.344	0.322	0.317	0.280	0.227	0.190	0.164	0.136	0.111	0.089	0.077	-	-	-	
	T_{OUT}[N•m]	28.4	32.8	47.7	52.7	60.0	60.0	60.0	60.0	60.0	60.0	60.0	56.9	57.4	-	-	-	CNH C-71
	T_{OUT}[kgf•m]	2.90	3.34	4.86	5.37	6.12	6.12	6.12	6.12	6.12	6.12	6.12	5.80	5.85	-	-	-	CNF C-76
	Pro[N]	1700	1770	1770	1770	1770	1770	1770	1770	1770	1770	1660	1580	1580	-	-	-	CNV C-82
	Pro[kgf]	173	180	180	180	180	180	180	180	180	180	169	161	161	-	-	-	
6080	P_1[kW]	0.592	0.592	0.577	0.488	0.423	0.373	0.292	0.254	0.219	0.181	0.148	0.124	0.108	0.089	0.073	-	
	T_{OUT}[N•m]	44.8	59.7	80.0	80.0	80.0	80.0	77.2	80.0	80.0	80.0	80.0	80.0	80.0	80.0	80.0	-	CNH C-71
	T_{OUT}[kgf•m]	4.57	6.09	8.15	8.15	8.15	8.15	7.87	8.15	8.15	8.15	8.15	8.15	8.15	8.15	8.15	-	CNF C-76
	Pro[N]	2380	2560	2560	2560	2560	2560	2560	2560	2500	2560	2540	2480	2510	2460	2450	-	CNV C-82
	Pro[kgf]	243	261	261	261	261	261	261	261	255	261	259	253	256	251	250	-	
6085	P_1[kW]	0.778	0.778	0.683	0.610	0.529	0.467	0.292	0.317	0.274	0.227	0.185	0.156	0.135	0.112	0.091	-	
	T_{OUT}[N•m]	58.8	78.4	94.7	100	100	100	77.2	100	100	100	100	100	100	100	100	-	CNH C-71
	T_{OUT}[kgf•m]	5.99	7.99	9.65	10.2	10.2	10.2	7.87	10.2	10.2	10.2	10.2	10.2	10.2	10.2	10.2	-	CNF C-76
	Pro[N]	2350	2530	2560	2560	2560	2560	2560	2360	2300	2420	2340	2290	2310	2260	2260	-	CNV C-82
	Pro[kgf]	240	258	261	261	261	261	261	241	234	247	239	233	235	230	230	-	
6090	P_1[kW]	1.15	1.15	1.08	0.916	0.794	0.700	0.567	0.476	0.410	0.340	0.277	0.231	0.196	0.148	0.137	0.072	
	T_{OUT}[N•m]	86.7	116	150	150	150	150	150	150	150	150	150	149	146	132	150	108	CNH C-71
	T_{OUT}[kgf•m]	8.84	11.8	15.3	15.3	15.3	15.3	15.3	15.3	15.3	15.3	15.3	15.2	14.9	13.5	15.3	11.0	CNF C-76
	Pro[N]	3340	3340	3340	3340	3340	3340	3340	3280	3290	3300	3310	3280	3300	3310	3310	3310	CNV C-82
	Pro[kgf]	340	340	340	340	340	340	340	334	335	336	337	334	336	337	337	337	
6095	P_1[kW]	1.52	1.52	1.24	1.19	1.06	0.934	0.756	0.588	0.547	0.453	0.369	0.239	0.196	0.148	0.154	0.072	
	T_{OUT}[N•m]	115	153	172	196	200	200	200	185	200	200	200	153	146	132	169	108	CNH C-71
	T_{OUT}[kgf•m]	11.7	15.6	17.5	20.0	20.4	20.4	20.4	18.9	20.4	20.4	20.4	15.6	14.9	13.5	17.2	11.0	CNF C-76
	Pro[N]	3340	3340	3340	3340	3340	3340	3340	3210	3200	3200	3220	3280	3300	3310	3280	3310	CNV C-82
	Pro[kgf]	340	340	340	340	340	340	340	327	326	326	328	334	336	337	334	337	
6100	P_1[kW]	2.26	2.20	1.80	1.53	1.32	1.17	0.945	0.794	0.684	0.567	0.461	0.389	0.336	0.279	0.228	0.167	
	T_{OUT}[N•m]	171	222	250	250	250	250	250	250	250	250	250	250	250	250	250	250	CNH C-71
	T_{OUT}[kgf•m]	17.4	22.6	25.5	25.5	25.5	25.5	25.5	25.5	25.5	25.5	25.5	25.5	25.5	25.5	25.5	25.5	CNF C-76
	Pro[N]	5080	5400	5400	5400	5400	5400	5400	5400	5400	5400	5400	5400	5400	5380	5400	5360	CNV C-82
	Pro[kgf]	518	550	550	550	550	550	550	550	550	550	550	550	550	548	550	546	
6105	P_1[kW]	2.26	2.20	2.22	1.83	1.59	1.40	1.13	0.952	0.821	0.680	0.554	0.462	0.398	0.295	0.274	0.172	
	T_{OUT}[N•m]	171	222	308	300	300	300	300	300	300	300	300	297	296	264	300	258	CNH C-71
	T_{OUT}[kgf•m]	17.4	22.6	31.4	30.6	30.6	30.6	30.6	30.6	30.6	30.6	30.6	30.3	30.2	26.9	30.6	26.3	CNF C-76
	Pro[N]	5080	5400	5400	5400	5400	5400	5400	5400	5400	5400	5400	5310	5090	5370	4780	5350	CNV C-82
	Pro[kgf]	518	550	550	550	550	550	550	550	550	550	550	541	519	547	487	545	
6110	P_1[kW]	2.56	3.55	2.60	2.20	1.90	1.68	1.36	1.14	0.985	0.816	0.664	0.560	0.484	0.402	0.328	-	
	T_{OUT}[N•m]	193	358	360	360	360	360	360	360	360	360	360	360	360	360	360	-	CNH C-71
	T_{OUT}[kgf•m]	19.7	36.5	36.7	36.7	36.7	36.7	36.7	36.7	36.7	36.7	36.7	36.7	36.7	36.7	36.7	-	CNF C-76
	Pro[N]	5760	6280	7260	7550	7610	7610	7610	7340	7200	7280	7590	7590	7610	7580	7600	-	CNV C-82
	Pro[kgf]	587	640	740	770	776	776	776	748	734	742	774	774	776	773	775	-	
6115	P_1[kW]	2.56	3.92	3.03	2.56	2.22	1.96	1.59	1.33	1.15	0.952	0.775	0.654	0.565	0.469	0.383	-	
	T_{OUT}[N•m]	193	395	420	420	420	420	420	420	420	420	420	420	420	420	420	-	CNH C-71
	T_{OUT}[kgf•m]	19.7	40.3	42.8	42.8	42.8	42.8	42.8	42.8	42.8	42.8	42.8	42.8	42.8	42.8	42.8	-	CNF C-76
	Pro[N]	5760	6230	7180	7480	7610	7500	7460	7150	7010	7090	7370	7410	7430	7390	7410	-	CNV C-82
	Pro[kgf]	587	635	732	762	776	765	760	729	715	723	751	755	757	753	755	-	
6120	P_1[kW]	4.85	4.72	3.79	3.20	2.78	2.43	1.97	1.67	1.42	1.19	0.969	0.817	0.706	0.587	0.479	-	
	T_{OUT}[N•m]	366	476	525	525	525	520	522	525	520	525	525	525	525	525	525	-	CNH C-71
	T_{OUT}[kgf•m]	37.3	48.5	53.5	53.5	53.5	53.0	53.2	53.5	53.0	53.5	53.5	53.5	53.5	53.5	53.5	-	CNF C-76
	Pro[N]	6380	7080	8100	8420	9090	9230	9810	9810	9810	9810	9810	9810	9810	9810	9780	-	CNV C-82
	Pro[kgf]	650	722	826	858	927	941	1000	1000	1000	1000	1000	1000	1000	1000	997	-	
Frame Size	Ratio[Z]	6	8	11	13	15	17	21	25	29	35	43	51	59	71	87	119	Page of Dim.
	n_2 [r/min]	120	90.0	65.5	55.4	48.0	42.4	34.3	28.8	24.8	20.6	16.7	14.1	12.2	10.1	8.28	6.05	

Note: 1. Allowable radial load Pro is the value at the midpoint of the output shaft. Refer to pages F-11~12 when radial load is off the midpoint of output shaft and for checking thrust load.
2. Refer to pages F-15~16 for allowable radial load for input shaft.

Selection Tables 6000 Series Reducer

Single Reduction Ratio 6 ~ 119 Frame Size: 6125 ~ 6195

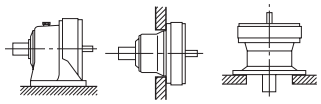

n_1: Input Speed [r/min]
n_2: Output Speed [r/min]
P_1: Allowable input power [kW]
T_{out}: Allowable output torque [N·m, kgf·m]
Pro: Allowable output shaft radial load [N, kgf]
*Consult us for Pro of CNF and CHF type.

Input Speed n_1 = 720 r/min

Frame Size	n_2 [r/min]	120	90.0	65.5	55.4	48.0	42.4	34.3	28.8	24.8	20.6	16.7	14.1	12.2	10.1	8.28	6.05	Page of Dim.
	Ratio[Z]	6	8	11	13	15	17	21	25	29	35	43	51	59	71	87	119	
6125	P_1[kW]	4.85	4.72	4.09	3.69	3.33	2.94	2.38	2.00	1.72	1.43	1.16	0.980	0.847	0.661	0.575	-	
	T_{OUT}[N•m]	366	476	567	605	630	630	630	630	630	630	630	630	630	592	630	-	CNH C-71
	T_{OUT}[kgf•m]	37.3	48.5	57.8	61.7	64.2	64.2	64.2	64.2	64.2	64.2	64.2	64.2	64.2	60.3	64.2	-	CNF C-76
	Pro[N]	6380	7080	8050	8340	8990	9130	9810	9810	9810	9810	9810	9810	9810	9810	9560	-	CNV C-82
	Pro[kgf]	650	722	821	850	916	931	1000	1000	1000	1000	1000	1000	1000	1000	975	-	
6130	P_1[kW]	7.19	7.07	5.63	4.76	4.13	3.64	2.95	2.48	2.13	1.77	1.44	1.43	1.23	1.01	0.774	-	
	T_{OUT}[N•m]	543	713	780	780	780	780	780	780	780	780	780	920	912	902	848	-	CHH C-72
	T_{OUT}[kgf•m]	55.4	72.7	79.5	79.5	79.5	79.5	79.5	79.5	79.5	79.5	79.5	93.8	93.0	91.9	86.4	-	CHF C-77
	Pro[N]	7350	8170	9450	9920	10200	11000	11800	12300	13000	13800	14700	14700	14700	14700	14700	-	CVV C-83
	Pro[kgf]	749	833	963	1010	1040	1120	1200	1250	1330	1410	1500	1500	1500	1500	1500	-	
6135	P_1[kW]	7.87	7.27	6.78	5.74	4.97	4.39	3.55	2.86	2.57	2.13	1.73	1.49	1.41	1.16	0.893	-	
	T_{OUT}[N•m]	595	733	940	940	940	940	940	900	940	940	940	959	1050	1040	979	-	CHH C-72
	T_{OUT}[kgf•m]	60.7	74.7	95.8	95.8	95.8	95.8	95.8	91.7	95.8	95.8	95.8	97.8	107	106	99.8	-	CHF C-77
	Pro[N]	7290	8150	9300	9790	10100	10900	11700	12200	12900	13600	14700	14700	14700	14700	14700	-	CVV C-83
	Pro[kgf]	743	831	948	998	1030	1110	1190	1240	1310	1390	1500	1500	1500	1500	1500	-	
6140	P_1[kW]	9.48	9.20	8.84	7.48	6.48	5.72	4.63	3.89	3.35	2.78	2.26	1.91	1.65	1.37	1.12	-	
	T_{OUT}[N•m]	717	928	1230	1230	1230	1230	1230	1230	1230	1230	1230	1230	1230	1230	1230	-	CHH C-72
	T_{OUT}[kgf•m]	73.1	94.6	125	125	125	125	125	125	125	125	125	125	125	125	125	-	CHF C-77
	Pro[N]	11300	12600	14100	14500	15100	15900	16000	16000	16000	16000	16000	16000	16000	16000	16000	-	CVV C-83
	Pro[kgf]	1150	1280	1440	1480	1540	1620	1630	1630	1630	1630	1630	1630	1630	1630	1630	-	
6145	P_1[kW]	9.48	9.20	9.32	8.36	7.18	6.40	5.06	4.35	3.75	3.11	2.53	2.13	1.84	1.48	1.14	-	
	T_{OUT}[N•m]	717	928	1290	1370	1360	1370	1340	1370	1370	1370	1370	1370	1370	1320	1250	-	CHH C-72
	T_{OUT}[kgf•m]	73.1	94.6	131	140	139	140	137	140	140	140	140	140	140	135	127	-	CHF C-77
	Pro[N]	11300	12600	14000	14400	15100	15800	16000	16000	15800	16000	15700	15700	16000	16000	16000	-	CVV C-83
	Pro[kgf]	1150	1280	1430	1470	1540	1610	1630	1630	1610	1630	1600	1600	1630	1630	1630	-	
6160	P_1[kW]	17.5	17.4	12.7	10.7	9.29	8.19	6.63	5.57	4.80	3.98	3.20	2.73	2.36	1.96	1.60	-	
	T_{OUT}[N•m]	1320	1760	1760	1760	1760	1760	1760	1760	1760	1760	1740	1760	1760	1760	1760	-	CHH C-72
	T_{OUT}[kgf•m]	135	179	179	179	179	179	179	179	179	179	177	179	179	179	179	-	CHF C-77
	Pro[N]	12500	13800	16000	16900	18000	18600	20100	21200	22100	22100	22100	22100	22100	22100	22100	-	CVV C-84
	Pro[kgf]	1270	1410	1630	1720	1830	1900	2050	2160	2250	2250	2250	2250	2250	2250	2250	-	
6165	P_1[kW]	17.5	17.8	15.2	12.8	11.1	9.80	7.94	6.67	5.75	4.76	3.88	3.27	2.82	2.35	1.87	-	
	T_{OUT}[N•m]	1320	1790	2100	2100	2100	2100	2100	2100	2100	2100	2100	2100	2100	2100	2050	-	CHH C-72
	T_{OUT}[kgf•m]	135	182	214	214	214	214	214	214	214	214	214	214	214	214	209	-	CHF C-77
	Pro[N]	12500	13800	15800	16600	17700	18400	19900	21000	22000	22100	22100	22100	22100	22100	21800	-	CVV C-84
	Pro[kgf]	1270	1410	1610	1690	1800	1880	2030	2140	2240	2250	2250	2250	2250	2250	2220	-	
6170	P_1[kW]	24.6	25.1	18.3	15.4	13.4	11.8	9.56	8.03	6.92	5.74	4.67	3.94	3.40	2.83	2.31	-	
	T_{OUT}[N•m]	1860	2530	2530	2530	2530	2530	2530	2530	2530	2530	2530	2530	2530	2530	2530	-	CHH C-72
	T_{OUT}[kgf•m]	190	258	258	258	258	258	258	258	258	258	258	258	258	258	258	-	CHF C-77
	Pro[N]	13900	15200	17900	18800	19800	20700	22600	23600	25000	26600	28500	29500	29500	29500	29500	-	CVV C-84
	Pro[kgf]	1420	1550	1820	1920	2020	2110	2300	2410	2550	2710	2910	3010	3010	3010	3010	-	
6175	P_1[kW]	24.6	25.8	22.7	19.2	16.7	14.7	11.9	10.00	8.62	7.14	5.81	4.90	4.24	3.52	2.87	-	
	T_{OUT}[N•m]	1860	2600	3150	3150	3150	3150	3150	3150	3150	3150	3150	3150	3150	3150	3150	-	CHH C-72
	T_{OUT}[kgf•m]	190	265	321	321	321	321	321	321	321	321	321	321	321	321	321	-	CHF C-77
	Pro[N]	13900	15200	17500	18400	19400	20400	22300	23300	24600	26300	28200	29500	29500	29500	29500	-	CVV C-84
	Pro[kgf]	1420	1550	1780	1880	1980	2080	2270	2380	2510	2680	2870	3010	3010	3010	3010	-	
6180	P_1[kW]	-	-	29.3	24.8	21.5	19.0	15.3	12.9	11.1	9.19	7.49	6.30	5.45	4.53	3.70	-	
	T_{OUT}[N•m]	-	-	4060	4060	4060	4060	4050	4050	4050	4050	4060	4050	4050	4050	4060	-	CHH C-72
	T_{OUT}[kgf•m]	-	-	414	414	414	414	413	413	413	413	414	413	413	413	414	-	CHF C-77
	Pro[N]	-	-	23700	24800	26200	27800	30200	31500	33100	35500	38200	39700	41700	41700	41700	-	CVV C-84
	Pro[kgf]	-	-	2420	2530	2670	2830	3080	3210	3370	3620	3890	4050	4250	4250	4250	-	
6185	P_1[kW]	-	-	34.7	29.9	23.5	22.4	18.9	15.9	13.7	11.3	9.23	7.78	6.73	5.05	4.56	-	
	T_{OUT}[N•m]	-	-	4810	4900	4440	4790	5000	5000	5000	5000	5000	5000	5000	4510	5000	-	CHH C-72
	T_{OUT}[kgf•m]	-	-	490	499	453	488	510	510	510	510	510	510	510	460	510	-	CHF C-77
	Pro[N]	-	-	23300	24400	26000	27400	29800	31200	32700	35100	37800	39400	41300	41700	41700	-	CVV C-84
	Pro[kgf]	-	-	2380	2490	2650	2790	3040	3180	3330	3580	3850	4020	4210	4250	4250	-	
6190	P_1[kW]	-	-	41.0	38.9	33.8	29.8	24.1	20.3	17.5	14.5	11.8	9.93	8.58	7.13	5.82	-	
	T_{OUT}[N•m]	-	-	5680	6380	6380	6380	6380	6380	6380	6380	6380	6380	6380	6380	6380	-	CHH C-72
	T_{OUT}[kgf•m]	-	-	579	650	650	650	650	650	650	650	650	650	650	650	650	-	CHF C-77
	Pro[N]	-	-	33200	34300	36300	38500	41800	44000	46300	49100	53100	55500	58300	58400	58900	-	CVV C-84
	Pro[kgf]	-	-	3380	3500	3700	3920	4260	4490	4720	5010	5410	5660	5940	5950	6000	-	
6195	P_1[kW]	-	-	48.1	42.6	39.2	37.2	30.1	25.3	21.8	18.0	14.7	12.4	10.7	8.90	7.26	-	
	T_{OUT}[N•m]	-	-	6670	6980	7410	7960	7960	7960	7960	7960	7960	7960	7960	7960	7960	-	CHH C-72
	T_{OUT}[kgf•m]	-	-	680	712	755	811	811	811	811	811	811	811	811	811	811	-	CHF C-77
	Pro[N]	-	-	32800	34100	35800	37900	41400	43500	45900	48700	52600	55000	57900	58000	58400	-	CVV C-84
	Pro[kgf]	-	-	3340	3480	3650	3860	4220	4430	4680	4960	5360	5610	5900	5910	5950	-	
Frame Size	Ratio[Z]	6	8	11	13	15	17	21	25	29	35	43	51	59	71	87	119	Page of Dim.
	n_2 [r/min]	120	90.0	65.5	55.4	48.0	42.4	34.3	28.8	24.8	20.6	16.7	14.1	12.2	10.1	8.28	6.05	

Note: 1. Allowable radial load Pro is the value at the midpoint of the output shaft. Refer to pages F-11~12 when radial load is off the midpoint of output shaft and for checking thrust load.
2. Refer to pages F-15~16 for allowable radial load for input shaft.

Selection Tables 6000 Series Reducer

Single Reduction Ratio 6 ~ 119 Frame Size: 6205 ~ 6275

Input Speed	n_1 = 720 r/min	n_1: Input Speed [r/min]	T_{out}: Allowable output torque [N·m, kgf·m]
		n_2: Output Speed [r/min]	Pro: Allowable output shaft radial load [N, kgf]
		P_1: Allowable input power [kW]	*Consult us for Pro of CNF and CHF type.

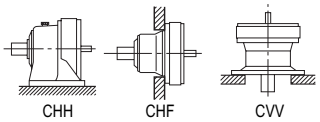

Frame Size	n_2 [r/min]	120	90.0	65.5	55.4	48.0	42.4	34.3	28.8	24.8	20.6	16.7	14.1	12.2	10.1	8.28	6.05	Page of Dim.
	Ratio[Z]	6	8	11	13	15	17	21	25	29	35	43	51	59	71	87	119	
6205	P_1[kW]	-	-	55.2	-	49.0	-	35.0	-	25.3	-	17.2	-	12.5	-	7.99	-	
	T_{OUT}[N•m]	-	-	7650	-	9270	-	9270	-	9230	-	9300	-	9300	-	8760	-	CHH C-72
	T_{OUT}[kgf•m]	-	-	780	-	945	-	945	-	941	-	948	-	948	-	893	-	CHF C-77
	Pro[N]	-	-	63000	-	67800	-	76300	-	83600	-	84100	-	84100	-	84100	-	CVV C-84
	Pro[kgf]	-	-	6420	-	6910	-	7780	-	8520	-	8570	-	8570	-	8570	-	
6215	P_1[kW]	-	-	75.3	-	64.4	-	47.2	-	34.6	-	23.3	-	17.0	-	10.3	-	
	T_{OUT}[N•m]	-	-	10400	-	12200	-	12500	-	12700	-	12700	-	12700	-	11300	-	CHH C-72
	T_{OUT}[kgf•m]	-	-	1060	-	1240	-	1270	-	1290	-	1290	-	1290	-	1150	-	CHF C-77
	Pro[N]	-	-	63000	-	67900	-	77200	-	84400	-	95800	-	104000	-	104000	-	CVV C-84
	Pro[kgf]	-	-	6420	-	6920	-	7870	-	8600	-	9770	-	10600	-	10600	-	
6225	P_1[kW]	-	-	88.1	-	76.6	-	55.9	-	41.2	-	29.5	-	21.4	-	13.7	-	
	T_{OUT}[N•m]	-	-	12200	-	14500	-	14800	-	15000	-	16000	-	15900	-	15100	-	CHH C-72
	T_{OUT}[kgf•m]	-	-	1240	-	1480	-	1510	-	1530	-	1630	-	1620	-	1540	-	CHF C-77
	Pro[N]	-	-	66600	-	72100	-	81200	-	89000	-	101000	-	110000	-	124000	-	CVV C-84
	Pro[kgf]	-	-	6790	-	7350	-	8280	-	9070	-	10300	-	11200	-	12600	-	
6235	P_1[kW]	-	-	113	-	104	-	71.4	-	51.7	-	37.6	-	27.3	-	15.7	-	
	T_{OUT}[N•m]	-	-	15700	-	19600	-	18900	-	18900	-	20400	-	20300	-	17200	-	CHH C-72
	T_{OUT}[kgf•m]	-	-	1600	-	2000	-	1930	-	1930	-	2080	-	2070	-	1750	-	CHF C-77
	Pro[N]	-	-	83400	-	89000	-	101000	-	111000	-	125000	-	137000	-	155000	-	CVV C-84
	Pro[kgf]	-	-	8500	-	9070	-	10300	-	11300	-	12700	-	14000	-	15800	-	
6245	P_1[kW]	-	-	132	-	132	-	97.5	-	70.6	-	47.6	-	34.7	-	20.7	-	
	T_{OUT}[N•m]	-	-	18300	-	24900	-	25800	-	25800	-	25800	-	25800	-	22600	-	CHH C-72
	T_{OUT}[kgf•m]	-	-	1870	-	2540	-	2630	-	2630	-	2630	-	2630	-	2300	-	CHF C-77
	Pro[N]	-	-	92600	-	98800	-	112000	-	123000	-	139000	-	152000	-	173000	-	CVV C-84
	Pro[kgf]	-	-	9440	-	10100	-	11400	-	12500	-	14200	-	15500	-	17600	-	
6255	P_1[kW]	-	-	151	-	151	-	117	-	88.9	-	61.5	-	44.9	-	28.3	-	
	T_{OUT}[N•m]	-	-	20900	-	28500	-	31000	-	32500	-	33300	-	33400	-	31000	-	CHH C-72
	T_{OUT}[kgf•m]	-	-	2130	-	2910	-	3160	-	3310	-	3390	-	3400	-	3160	-	CHF C-77
	Pro[N]	-	-	114000	-	122000	-	136000	-	151000	-	170000	-	187000	-	211000	-	CVV C-84
	Pro[kgf]	-	-	11600	-	12400	-	13900	-	15400	-	17300	-	19100	-	21500	-	
6265	P_1[kW]	-	-	175	-	175	-	172	-	126	-	84.9	-	61.9	-	40.2	-	
	T_{OUT}[N•m]	-	-	24200	-	33000	-	45400	-	46000	-	46000	-	46000	-	44000	-	CHH C-72
	T_{OUT}[kgf•m]	-	-	2470	-	3360	-	4630	-	4690	-	4690	-	4690	-	4490	-	CHF C-77
	Pro[N]	-	-	140000	-	149000	-	166000	-	184000	-	208000	-	228000	-	257000	-	CVV C-84
	Pro[kgf]	-	-	14300	-	15200	-	16900	-	18800	-	21200	-	23200	-	26200	-	
6275	P_1[kW]	-	-	-	-	-	-	-	-	159	-	126	-	91.7	-	53.4	-	
	T_{OUT}[N•m]	-	-	-	-	-	-	-	-	58100	-	68200	-	68200	-	58600	-	CHH C-72
	T_{OUT}[kgf•m]	-	-	-	-	-	-	-	-	5920	-	6950	-	6950	-	5970	-	
	Pro[N]	-	-	-	-	-	-	-	-	214000	-	248000	-	248000	-	240000	-	CVV C-84
	Pro[kgf]	-	-	-	-	-	-	-	-	21800	-	25300	-	25300	-	24500	-	
Frame Size	Ratio[Z]	6	8	11	13	15	17	21	25	29	35	43	51	59	71	87	119	Page of Dim.
	n_2 [r/min]	120	90.0	65.5	55.4	48.0	42.4	34.3	28.8	24.8	20.6	16.7	14.1	12.2	10.1	8.28	6.05	

Note: 1. Allowable radial load Pro is the value at the midpoint of the output shaft. Refer to pages F-11~12 when radial load is off the midpoint of output shaft and for checking thrust load.
2. Refer to pages F-15~16 for allowable radial load for input shaft.

MEMO

Selection Tables 6000 Series Reducer

Single Reduction Ratio 6 ~ 119 Frame Size: 6060 ~ 6120

Input Speed	n_1 = 870 r/min	n_1: Input Speed [r/min]	T_{out}: Allowable output torque [N·m, kgf·m]
		n_2: Output Speed [r/min]	Pro: Allowable output shaft radial load [N, kgf]
		P_1: Allowable input power [kW]	*Consult us for Pro of CNF and CHF type.

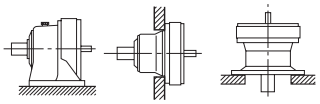

CNH CNF CNV

Frame Size	n_2 [r/min]	145	109	79.1	66.9	58.0	51.2	41.4	34.8	30.0	24.9	20.2	17.1	14.7	12.3	10.0	7.31	Page of Dim.
	Ratio[Z]	6	8	11	13	15	17	21	25	29	35	43	51	59	71	87	119	
6060	P_1[kW]	0.200	0.200	0.200	0.177	0.153	0.135	0.110	0.092	0.079	0.066	0.054	-	-	-	-	-	
	T_{OUT}[N•m]	12.5	16.7	22.9	24.0	24.0	24.0	24.0	24.0	24.0	24.0	24.0	-	-	-	-	-	CNH C-71
	T_{OUT}[kgf•m]	1.27	1.70	2.33	2.45	2.45	2.45	2.45	2.45	2.45	2.45	2.45	-	-	-	-	-	CNF C-76
	Pro[N]	940	1070	1180	1180	1180	1180	1180	1180	1180	1180	1180	-	-	-	-	-	CNV C-82
	Pro[kgf]	95.8	109	120	120	120	120	120	120	120	120	120	-	-	-	-	-	
6065	P_1[kW]	0.286	0.286	0.262	0.221	0.192	0.169	0.137	0.115	0.099	0.082	0.067	-	-	-	-	-	
	T_{OUT}[N•m]	17.9	23.9	30.0	30.0	30.0	30.0	30.0	30.0	30.0	30.0	30.0	-	-	-	-	-	CNH C-71
	T_{OUT}[kgf•m]	1.82	2.44	3.06	3.06	3.06	3.06	3.06	3.06	3.06	3.06	3.06	-	-	-	-	-	CNF C-76
	Pro[N]	931	1010	1140	1180	1180	1180	1180	1180	1180	1180	1180	-	-	-	-	-	CNV C-82
	Pro[kgf]	94.9	103	116	120	120	120	120	120	120	120	120	-	-	-	-	-	
6070	P_1[kW]	0.347	0.347	0.347	0.332	0.288	0.254	0.205	0.173	0.149	0.123	0.100	0.085	0.073	-	-	-	
	T_{OUT}[N•m]	21.7	28.9	39.8	45.0	45.0	45.0	45.0	45.0	45.0	45.0	45.0	45.0	45.0	-	-	-	CNH C-71
	T_{OUT}[kgf•m]	2.21	2.95	4.06	4.59	4.59	4.59	4.59	4.59	4.59	4.59	4.59	4.59	4.59	-	-	-	CNF C-76
	Pro[N]	1610	1770	1770	1770	1770	1770	1770	1770	1770	1770	1770	1750	1770	-	-	-	CNV C-82
	Pro[kgf]	164	180	180	180	180	180	180	180	180	180	180	178	180	-	-	-	
6075	P_1[kW]	0.407	0.361	0.397	0.372	0.369	0.338	0.274	0.224	0.198	0.164	0.134	0.107	0.092	-	-	-	
	T_{OUT}[N•m]	25.5	30.1	45.6	50.4	57.7	60.0	60.0	58.4	60.0	60.0	60.0	56.9	56.7	-	-	-	CNH C-71
	T_{OUT}[kgf•m]	2.60	3.07	4.65	5.14	5.88	6.12	6.12	5.95	6.12	6.12	6.12	5.80	5.78	-	-	-	CNF C-76
	Pro[N]	1600	1770	1770	1770	1770	1770	1770	1770	1770	1770	1660	1580	1600	-	-	-	CNV C-82
	Pro[kgf]	163	180	180	180	180	180	180	180	180	180	169	161	163	-	-	-	
6080	P_1[kW]	0.592	0.592	0.592	0.590	0.511	0.451	0.353	0.307	0.265	0.219	0.178	0.150	0.130	0.108	0.088	-	
	T_{OUT}[N•m]	37.1	49.4	67.9	80.0	80.0	80.0	77.2	80.0	80.0	80.0	80.0	80.0	80.0	80.0	80.0	-	CNH C-71
	T_{OUT}[kgf•m]	3.78	5.04	6.92	8.15	8.15	8.15	7.87	8.15	8.15	8.15	8.15	8.15	8.15	8.15	8.15	-	CNF C-76
	Pro[N]	2240	2420	2560	2560	2560	2560	2560	2560	2500	2560	2540	2480	2510	2460	2450	-	CNV C-82
	Pro[kgf]	228	247	261	261	261	261	261	261	255	261	259	253	256	251	250	-	
6085	P_1[kW]	0.778	0.778	0.775	0.738	0.639	0.564	0.353	0.384	0.331	0.274	0.223	0.188	0.163	0.135	0.110	-	
	T_{OUT}[N•m]	48.7	64.9	88.9	100	100	100	77.2	100	100	100	100	100	100	100	100	-	CNH C-71
	T_{OUT}[kgf•m]	4.96	6.62	9.06	10.2	10.2	10.2	7.87	10.2	10.2	10.2	10.2	10.2	10.2	10.2	10.2	-	CNF C-76
	Pro[N]	2220	2390	2560	2560	2560	2560	2560	2360	2300	2420	2340	2290	2310	2260	2260	-	CNV C-82
	Pro[kgf]	226	244	261	261	261	261	261	241	234	247	239	233	235	230	230	-	
6090	P_1[kW]	1.15	1.15	1.15	1.11	0.959	0.846	0.685	0.575	0.496	0.411	0.335	0.280	0.237	0.179	0.165	0.087	
	T_{OUT}[N•m]	71.7	95.6	131	150	150	150	150	150	150	150	150	149	146	132	150	108	CNH C-71
	T_{OUT}[kgf•m]	7.31	9.75	13.4	15.3	15.3	15.3	15.3	15.3	15.3	15.3	15.3	15.2	14.9	13.5	15.3	11.0	CNF C-76
	Pro[N]	3290	3340	3340	3340	3340	3340	3340	3280	3290	3300	3310	3280	3300	3310	3310	3310	CNV C-82
	Pro[kgf]	335	340	340	340	340	340	340	334	335	336	337	334	336	337	337	337	
6095	P_1[kW]	1.52	1.52	1.43	1.38	1.28	1.13	0.913	0.680	0.637	0.548	0.430	0.288	0.237	0.179	0.178	0.087	
	T_{OUT}[N•m]	94.8	126	164	187	200	200	200	177	193	200	193	153	146	132	162	108	CNH C-71
	T_{OUT}[kgf•m]	9.66	12.8	16.7	19.1	20.4	20.4	20.4	18.0	19.7	20.4	19.7	15.6	14.9	13.5	16.5	11.0	CNF C-76
	Pro[N]	3240	3340	3340	3340	3340	3340	3340	3230	3210	3200	3230	3280	3300	3310	3290	3310	CNV C-82
	Pro[kgf]	330	340	340	340	340	340	340	329	327	326	329	334	336	337	335	337	
6100	P_1[kW]	2.35	2.35	2.18	1.84	1.60	1.41	1.14	0.959	0.827	0.685	0.558	0.470	0.406	0.338	0.276	0.201	
	T_{OUT}[N•m]	147	196	250	250	250	250	250	250	250	250	250	250	250	250	250	250	CNH C-71
	T_{OUT}[kgf•m]	15.0	20.0	25.5	25.5	25.5	25.5	25.5	25.5	25.5	25.5	25.5	25.5	25.5	25.5	25.5	25.5	CNF C-76
	Pro[N]	4790	5320	5400	5400	5400	5400	5400	5400	5400	5400	5400	5400	5400	5380	5400	5360	CNV C-82
	Pro[kgf]	488	542	550	550	550	550	550	550	550	550	550	550	550	548	550	546	
6105	P_1[kW]	2.73	2.54	2.61	2.21	1.92	1.69	1.37	1.15	0.992	0.822	0.669	0.558	0.481	0.357	0.331	0.208	
	T_{OUT}[N•m]	171	212	300	300	300	300	300	300	300	300	300	297	296	264	300	258	CNH C-71
	T_{OUT}[kgf•m]	17.4	21.6	30.6	30.6	30.6	30.6	30.6	30.6	30.6	30.6	30.6	30.3	30.2	26.9	30.6	26.3	CNF C-76
	Pro[N]	4760	5300	5400	5400	5400	5400	5400	5400	5400	5400	5400	5310	5090	5370	4780	5350	CNV C-82
	Pro[kgf]	485	540	550	550	550	550	550	550	550	550	550	541	519	547	487	545	
6110	P_1[kW]	3.09	3.55	3.14	2.66	2.30	2.03	1.64	1.38	1.19	0.986	0.803	0.677	0.585	0.486	0.397	-	
	T_{OUT}[N•m]	193	296	360	360	360	360	360	360	360	360	360	360	360	360	360	-	CNH C-71
	T_{OUT}[kgf•m]	19.7	30.2	36.7	36.7	36.7	36.7	36.7	36.7	36.7	36.7	36.7	36.7	36.7	36.7	36.7	-	CNF C-76
	Pro[N]	5400	5940	6790	7060	7570	7610	7610	7340	7200	7280	7590	7590	7610	7580	7600	-	CNV C-82
	Pro[kgf]	550	606	692	720	772	776	776	748	734	742	774	774	776	773	775	-	
6115	P_1[kW]	3.09	3.92	3.66	3.10	2.69	2.37	1.92	1.61	1.39	1.15	0.937	0.790	0.683	0.567	0.463	-	
	T_{OUT}[N•m]	193	327	420	420	420	420	420	420	420	420	420	420	420	420	420	-	CNH C-71
	T_{OUT}[kgf•m]	19.7	33.3	42.8	42.8	42.8	42.8	42.8	42.8	42.8	42.8	42.8	42.8	42.8	42.8	42.8	-	CNF C-76
	Pro[N]	5400	5910	6710	6990	7500	7500	7460	7150	7010	7090	7370	7410	7430	7390	7410	-	CNV C-82
	Pro[kgf]	550	602	684	713	765	765	760	729	715	723	751	755	757	753	755	-	
6120	P_1[kW]	5.07	5.07	4.58	3.87	3.36	2.93	2.38	2.01	1.72	1.44	1.17	0.987	0.853	0.709	0.579	-	
	T_{OUT}[N•m]	317	423	525	525	525	520	522	525	520	525	525	525	525	525	525	-	CNH C-71
	T_{OUT}[kgf•m]	32.3	43.1	53.5	53.5	53.5	53.0	53.2	53.5	53.0	53.5	53.5	53.5	53.5	53.5	53.5	-	CNF C-76
	Pro[N]	6020	6680	7570	7870	8510	8640	9540	9810	9810	9810	9810	9810	9810	9810	9780	-	CNV C-82
	Pro[kgf]	614	681	772	802	867	881	972	1000	1000	1000	1000	1000	1000	1000	997	-	
Frame Size	Ratio[Z]	6	8	11	13	15	17	21	25	29	35	43	51	59	71	87	119	Page of Dim.
	n_2 [r/min]	145	109	79.1	66.9	58.0	51.2	41.4	34.8	30.0	24.9	20.2	17.1	14.7	12.3	10.0	7.31	

Note: 1. Allowable radial load Pro is the value at the midpoint of the output shaft. Refer to pages F-11~12 when radial load is off the midpoint of output shaft and for checking thrust load.
2. Refer to pages F-15~16 for allowable radial load for input shaft.

Selection Tables 6000 Series Reducer

Single Reduction Ratio 6 ~ 119 Frame Size: 6125 ~ 6195

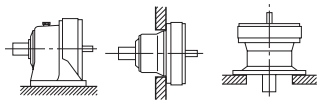

n_1: Input Speed [r/min]
n_2: Output Speed [r/min]
P_1: Allowable input power [kW]
T_{out}: Allowable output torque [N·m, kgf·m]
Pro: Allowable output shaft radial load [N, kgf]
*Consult us for Pro of CNF and CHF type.

Input Speed n_1 = 870 r/min

Frame Size	n_2 [r/min]	145	109	79.1	66.9	58.0	51.2	41.4	34.8	30.0	24.9	20.2	17.1	14.7	12.3	10.0	7.31	Page of Dim.
	Ratio[Z]	6	8	11	13	15	17	21	25	29	35	43	51	59	71	87	119	
6125	P_1[kW]	5.84	5.45	4.73	4.27	4.03	3.55	2.88	2.42	2.08	1.73	1.40	1.18	1.02	0.770	0.694	-	
	T_{OUT}[N•m]	366	455	542	579	630	630	630	630	630	630	630	630	630	570	630	-	CNH C-71
	T_{OUT}[kgf•m]	37.3	46.4	55.2	59.0	64.2	64.2	64.2	64.2	64.2	64.2	64.2	64.2	64.2	58.1	64.2	-	CNF C-76
	Pro[N]	5960	6640	7550	7820	8400	8540	9440	9810	9810	9810	9810	9810	9810	9810	9560	-	CNV C-82
	Pro[kgf]	608	677	770	797	856	871	962	1000	1000	1000	1000	1000	1000	1000	975	-	
6130	P_1[kW]	8.31	8.17	6.80	5.75	4.99	4.40	3.56	2.99	2.58	2.14	1.74	1.65	1.43	1.19	0.935	-	
	T_{OUT}[N•m]	520	682	780	780	780	780	780	780	780	780	780	880	880	880	848	-	CHH C-72
	T_{OUT}[kgf•m]	53.0	69.5	79.5	79.5	79.5	79.5	79.5	79.5	79.5	79.5	79.5	89.7	89.7	89.7	86.4	-	CHF C-77
	Pro[N]	6890	7660	8830	9270	9520	10300	11000	11500	12200	12900	13900	14500	14700	14700	14700	-	CVV C-83
	Pro[kgf]	702	781	900	945	970	1050	1120	1170	1240	1310	1420	1480	1500	1500	1500	-	
6135	P_1[kW]	9.10	8.40	8.19	6.92	6.01	5.30	4.29	3.45	3.11	2.58	2.10	1.72	1.65	1.37	1.08	-	
	T_{OUT}[N•m]	569	701	940	938	940	940	940	900	940	940	940	917	1010	1010	979	-	CHH C-72
	T_{OUT}[kgf•m]	58.0	71.5	95.8	95.6	95.8	95.8	95.8	91.7	95.8	95.8	95.8	93.5	103	103	99.8	-	CHF C-77
	Pro[N]	6830	7640	8680	9150	9400	10100	10900	11500	12100	12800	13800	14400	14700	14700	14700	-	CVV C-83
	Pro[kgf]	696	779	885	933	958	1030	1110	1170	1230	1300	1410	1470	1500	1500	1500	-	
6140	P_1[kW]	11.2	10.6	10.7	9.04	7.83	6.91	5.59	4.70	4.05	3.36	2.73	2.30	1.99	1.65	1.35	-	
	T_{OUT}[N•m]	698	887	1230	1230	1230	1230	1230	1230	1230	1230	1230	1230	1230	1230	1230	-	CHH C-72
	T_{OUT}[kgf•m]	71.2	90.4	125	125	125	125	125	125	125	125	125	125	125	125	125	-	CHF C-77
	Pro[N]	10700	11900	13300	13600	14300	15000	16000	16000	16000	16000	16000	16000	16000	16000	16000	-	CVV C-83
	Pro[kgf]	1090	1210	1360	1390	1460	1530	1630	1630	1630	1630	1630	1630	1630	1630	1630	-	
6145	P_1[kW]	11.2	10.6	11.0	10.1	8.68	7.73	6.11	5.26	4.53	3.75	3.06	2.50	2.15	1.77	1.38	-	
	T_{OUT}[N•m]	698	887	1260	1370	1360	1370	1340	1370	1370	1370	1370	1330	1320	1310	1250	-	CHH C-72
	T_{OUT}[kgf•m]	71.2	90.4	128	140	139	140	137	140	140	140	140	136	135	134	127	-	CHF C-77
	Pro[N]	10700	11900	13300	13600	14200	14900	16000	16000	15800	16000	15700	15900	16000	16000	16000	-	CVV C-83
	Pro[kgf]	1090	1210	1360	1390	1450	1520	1630	1630	1610	1630	1600	1620	1630	1630	1630	-	
6160	P_1[kW]	20.3	19.7	15.3	12.9	11.2	9.90	8.01	6.73	5.80	4.81	3.87	3.30	2.85	2.37	1.93	-	
	T_{OUT}[N•m]	1270	1640	1760	1760	1760	1760	1760	1760	1760	1760	1740	1760	1760	1760	1760	-	CHH C-72
	T_{OUT}[kgf•m]	129	167	179	179	179	179	179	179	179	179	177	179	179	179	179	-	CHF C-77
	Pro[N]	11700	13000	14900	15800	16800	17400	18800	19800	20800	22100	22100	22100	22100	22100	22100	-	CVV C-84
	Pro[kgf]	1190	1330	1520	1610	1710	1770	1920	2020	2120	2250	2250	2250	2250	2250	2250	-	
6165	P_1[kW]	21.2	20.6	18.3	15.5	13.4	11.8	9.59	8.06	6.94	5.75	4.68	3.95	3.41	2.84	2.26	-	
	T_{OUT}[N•m]	1320	1720	2100	2100	2100	2100	2100	2100	2100	2100	2100	2100	2100	2100	2050	-	CHH C-72
	T_{OUT}[kgf•m]	135	175	214	214	214	214	214	214	214	214	214	214	214	214	209	-	CHF C-77
	Pro[N]	11600	12900	14700	15500	16600	17200	18600	19600	20500	21900	22100	22100	22100	22100	21800	-	CVV C-84
	Pro[kgf]	1180	1310	1500	1580	1690	1750	1900	2000	2090	2230	2250	2250	2250	2250	2220	-	
6170	P_1[kW]	27.6	27.6	22.1	18.6	16.2	14.3	11.6	9.70	8.37	6.93	5.64	4.76	4.11	3.42	2.79	-	
	T_{OUT}[N•m]	1730	2300	2530	2530	2530	2530	2530	2530	2530	2530	2530	2530	2530	2530	2530	-	CHH C-72
	T_{OUT}[kgf•m]	176	234	258	258	258	258	258	258	258	258	258	258	258	258	258	-	CHF C-77
	Pro[N]	13100	14400	16700	17500	18500	19400	21200	22100	23400	24900	26600	27900	29400	29500	29500	-	CVV C-84
	Pro[kgf]	1340	1470	1700	1780	1890	1980	2160	2250	2390	2540	2710	2840	3000	3010	3010	-	
6175	P_1[kW]	29.7	30.1	27.5	23.2	20.1	17.8	14.4	12.1	10.4	8.63	7.02	5.92	5.12	4.25	3.47	-	
	T_{OUT}[N•m]	1860	2510	3150	3150	3150	3150	3150	3150	3150	3150	3150	3150	3150	3150	3150	-	CHH C-72
	T_{OUT}[kgf•m]	190	256	321	321	321	321	321	321	321	321	321	321	321	321	321	-	CHF C-77
	Pro[N]	13000	14200	16300	17100	18000	19000	20800	21800	23000	24600	26300	27600	29100	29500	29500	-	CVV C-84
	Pro[kgf]	1330	1450	1660	1740	1830	1940	2120	2220	2340	2510	2680	2810	2970	3010	3010	-	
6180	P_1[kW]	-	-	35.2	29.9	26.0	22.9	18.5	15.5	13.4	11.1	9.05	7.62	6.58	5.47	4.48	-	
	T_{OUT}[N•m]	-	-	4040	4060	4060	4060	4050	4050	4050	4050	4060	4050	4050	4050	4060	-	CHH C-72
	T_{OUT}[kgf•m]	-	-	412	414	414	414	413	413	413	413	414	413	413	413	414	-	CHF C-77
	Pro[N]	-	-	22100	23100	24500	26000	28200	29500	31000	33200	35800	37200	39000	41600	41700	-	CVV C-84
	Pro[kgf]	-	-	2250	2350	2500	2650	2870	3010	3160	3380	3650	3790	3980	4240	4250	-	
6185	P_1[kW]	-	-	39.0	36.2	27.2	25.8	22.8	19.2	16.5	13.7	11.2	9.40	8.13	6.10	5.51	-	
	T_{OUT}[N•m]	-	-	4470	4900	4250	4580	5000	5000	5000	5000	5000	5000	5000	4510	5000	-	CHH C-72
	T_{OUT}[kgf•m]	-	-	456	499	433	467	510	510	510	510	510	510	510	460	510	-	CHF C-77
	Pro[N]	-	-	21900	22700	24400	25700	27900	29100	30600	32900	35400	36900	38700	41500	41700	-	CVV C-84
	Pro[kgf]	-	-	2230	2310	2490	2620	2840	2970	3120	3350	3610	3760	3940	4230	4250	-	
6190	P_1[kW]	-	-	41.0	41.0	40.8	36.0	29.1	24.5	21.1	17.5	14.2	12.0	10.4	8.62	7.03	-	
	T_{OUT}[N•m]	-	-	4700	5560	6380	6380	6380	6380	6380	6380	6380	6380	6380	6380	6380	-	CHH C-72
	T_{OUT}[kgf•m]	-	-	479	567	650	650	650	650	650	650	650	650	650	650	650	-	CHF C-77
	Pro[N]	-	-	31400	32400	33900	36000	39200	41200	43400	46000	49700	52000	54600	58100	58900	-	CVV C-84
	Pro[kgf]	-	-	3200	3300	3460	3670	4000	4200	4420	4690	5070	5300	5570	5920	6000	-	
6195	P_1[kW]	-	-	48.1	48.1	45.3	44.9	36.3	30.5	26.3	21.8	17.8	15.0	12.9	10.8	8.77	-	
	T_{OUT}[N•m]	-	-	5520	6520	7090	7960	7960	7960	7960	7960	7960	7960	7960	7960	7960	-	CHH C-72
	T_{OUT}[kgf•m]	-	-	563	665	723	811	811	811	811	811	811	811	811	811	811	-	CHF C-77
	Pro[N]	-	-	31100	32000	33600	35400	38700	40700	42900	45500	49200	51500	54200	57600	58400	-	CVV C-84
	Pro[kgf]	-	-	3170	3260	3430	3610	3940	4150	4370	4640	5020	5250	5520	5870	5950		
Frame Size	Ratio[Z]	6	8	11	13	15	17	21	25	29	35	43	51	59	71	87	119	Page of Dim.
	n_2 [r/min]	145	109	79.1	66.9	58.0	51.2	41.4	34.8	30.0	24.9	20.2	17.1	14.7	12.3	10.0	7.31	

Note: 1. Allowable radial load Pro is the value at the midpoint of the output shaft. Refer to pages F-11~12 when radial load is off the midpoint of output shaft and for checking thrust load.
2. Refer to pages F-15~16 for allowable radial load for input shaft.

Selection Tables 6000 Series Reducer

Single Reduction Ratio 6 ~ 119 Frame Size: 6205 ~ 6275

Input Speed	n_1 = 870 r/min	n_1: Input Speed [r/min]	T_{out}: Allowable output torque [N·m, kgf·m]
		n_2: Output Speed [r/min]	Pro: Allowable output shaft radial load [N, kgf]
		P_1: Allowable input power [kW]	*Consult us for Pro of CNF and CHF type.

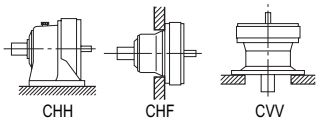

Frame Size	n_2 [r/min]	145	109	79.1	66.9	58.0	51.2	41.4	34.8	30.0	24.9	20.2	17.1	14.7	12.3	10.0	7.31	Page of Dim.
	Ratio[Z]	6	8	11	13	15	17	21	25	29	35	43	51	59	71	87	119	
6205	P_1[kW]	-	-	59.7	-	58.3	-	42.4	-	30.5	-	20.7	-	15.1	-	9.65	-	
	T_{OUT}[N•m]	-	-	6850	-	9130	-	9270	-	9230	-	9300	-	9300	-	8760	-	CHH C-72
	T_{OUT}[kgf•m]	-	-	698	-	931	-	945	-	941	-	948	-	948	-	893	-	CHF C-77
	Pro[N]	-	-	59700	-	63900	-	72000	-	78800	-	84100	-	84100	-	84100	-	CVV C-84
	Pro[kgf]	-	-	6090	-	6510	-	7340	-	8030	-	8570	-	8570	-	8570	-	
6215	P_1[kW]	-	-	75.3	-	75.3	-	57.1	-	41.8	-	28.2	-	20.6	-	12.4	-	
	T_{OUT}[N•m]	-	-	8640	-	11800	-	12500	-	12700	-	12700	-	12700	-	11300	-	CHH C-72
	T_{OUT}[kgf•m]	-	-	881	-	1200	-	1270	-	1290	-	1290	-	1290	-	1150	-	CHF C-77
	Pro[N]	-	-	59900	-	64000	-	72700	-	79500	-	90300	-	98700	-	104000	-	CVV C-84
	Pro[kgf]	-	-	6110	-	6520	-	7410	-	8100	-	9200	-	10100	-	10600	-	
6225	P_1[kW]	-	-	99.5	-	92.6	-	67.6	-	49.7	-	35.7	-	25.8	-	16.6	-	
	T_{OUT}[N•m]	-	-	11400	-	14500	-	14800	-	15000	-	16000	-	15900	-	15100	-	CHH C-72
	T_{OUT}[kgf•m]	-	-	1160	-	1480	-	1510	-	1530	-	1630	-	1620	-	1540	-	CHF C-77
	Pro[N]	-	-	63000	-	67900	-	76500	-	83900	-	95100	-	104000	-	117000	-	CVV C-84
	Pro[kgf]	-	-	6420	-	6920	-	7800	-	8550	-	9690	-	10600	-	11900	-	
6235	P_1[kW]	-	-	113	-	113	-	86.3	-	62.5	-	43.4	-	31.6	-	18.9	-	
	T_{OUT}[N•m]	-	-	13000	-	17700	-	18900	-	18900	-	19500	-	19400	-	17200	-	CHH C-72
	T_{OUT}[kgf•m]	-	-	1330	-	1800	-	1930	-	1930	-	1990	-	1980	-	1750	-	CHF C-77
	Pro[N]	-	-	79200	-	84300	-	95400	-	105000	-	118000	-	129000	-	146000	-	CVV C-84
	Pro[kgf]	-	-	8070	-	8590	-	9720	-	10700	-	12000	-	13100	-	14900	-	
6245	P_1[kW]	-	-	132	-	132	-	118	-	85.3	-	57.5	-	41.9	-	25.0	-	
	T_{OUT}[N•m]	-	-	15100	-	20600	-	25800	-	25800	-	25800	-	25800	-	22600	-	CHH C-72
	T_{OUT}[kgf•m]	-	-	1540	-	2100	-	2630	-	2630	-	2630	-	2630	-	2300	-	CHF C-77
	Pro[N]	-	-	88000	-	94000	-	105000	-	116000	-	131000	-	144000	-	163000	-	CVV C-84
	Pro[kgf]	-	-	8970	-	9580	-	10700	-	11800	-	13400	-	14700	-	16600	-	
6255	P_1[kW]	-	-	151	-	151	-	142	-	107	-	71.1	-	51.9	-	34.2	-	
	T_{OUT}[N•m]	-	-	17300	-	23600	-	31000	-	32500	-	31900	-	31900	-	31000	-	CHH C-72
	T_{OUT}[kgf•m]	-	-	1760	-	2410	-	3160	-	3310	-	3250	-	3250	-	3160	-	CHF C-77
	Pro[N]	-	-	108000	-	116000	-	128000	-	142000	-	161000	-	176000	-	199000	-	CVV C-84
	Pro[kgf]	-	-	11000	-	11800	-	13000	-	14500	-	16400	-	17900	-	20300	-	
6265	P_1[kW]	-	-	175	-	175	-	172	-	152	-	103	-	74.8	-	48.5	-	
	T_{OUT}[N•m]	-	-	20100	-	27300	-	37600	-	46000	-	46000	-	46000	-	44000	-	CHH C-72
	T_{OUT}[kgf•m]	-	-	2050	-	2780	-	3830	-	4690	-	4690	-	4690	-	4490	-	CHF C-77
	Pro[N]	-	-	132000	-	141000	-	158000	-	174000	-	196000	-	215000	-	242000	-	CVV C-84
	Pro[kgf]	-	-	13500	-	14400	-	16100	-	17700	-	20000	-	21900	-	24700	-	
6275	P_1[kW]	-	-	-	-	-	-	-	-	159	-	151	-	111	-	53.4	-	
	T_{OUT}[N•m]	-	-	-	-	-	-	-	-	48100	-	67600	-	68200	-	48500	-	CHH C-72
	T_{OUT}[kgf•m]	-	-	-	-	-	-	-	-	4900	-	6890	-	6950	-	4940	-	
	Pro[N]	-	-	-	-	-	-	-	-	203000	-	248000	-	248000	-	227000	-	CVV C-84
	Pro[kgf]	-	-	-	-	-	-	-	-	20700	-	25300	-	25300	-	23100	-	
Frame Size	Ratio[Z]	6	8	11	13	15	17	21	25	29	35	43	51	59	71	87	119	Page of Dim.
	n_2 [r/min]	145	109	79.1	66.9	58.0	51.2	41.4	34.8	30.0	24.9	20.2	17.1	14.7	12.3	10.0	7.31	

Note: 1. Allowable radial load Pro is the value at the midpoint of the output shaft. Refer to pages F-11~12 when radial load is off the midpoint of output shaft and for checking thrust load.
2. Refer to pages F-15~16 for allowable radial load for input shaft.

MEMO

Selection Tables 6000 Series Reducer

Single Reduction Ratio 6 ~ 119 Frame Size: 6060 ~ 6120

Input Speed	n_1 = 980 r/min	n_1: Input Speed [r/min]	T_{out}: Allowable output torque [N·m, kgf·m]
		n_2: Output Speed [r/min]	Pro: Allowable output shaft radial load [N, kgf]
		P_1: Allowable input power [kW]	*Consult us for Pro of CNF and CHF type.

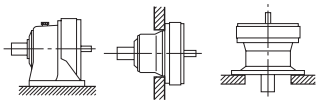

Frame Size	n_2 [r/min]	163	123	89.1	75.4	65.3	57.6	46.7	39.2	33.8	28.0	22.8	19.2	16.6	13.8	11.3	8.24	Page of Dim.
	Ratio[Z]	6	8	11	13	15	17	21	25	29	35	43	51	59	71	87	119	
6060	P_1[kW]	0.200	0.200	0.200	0.199	0.173	0.152	0.123	0.104	0.089	0.074	0.060	-	-	-	-	-	
	T_{OUT}[N•m]	11.1	14.8	20.4	24.0	24.0	24.0	24.0	24.0	24.0	24.0	24.0	-	-	-	-	-	CNH C-71
	T_{OUT}[kgf•m]	1.13	1.51	2.08	2.45	2.45	2.45	2.45	2.45	2.45	2.45	2.45	-	-	-	-	-	CNF C-76
	Pro[N]	905	1030	1180	1180	1180	1180	1180	1180	1180	1180	1180	-	-	-	-	-	CNV C-82
	Pro[kgf]	92.3	105	120	120	120	120	120	120	120	120	120	-	-	-	-	-	
6065	P_1[kW]	0.286	0.286	0.286	0.249	0.216	0.191	0.154	0.130	0.112	0.093	0.075	-	-	-	-	-	
	T_{OUT}[N•m]	15.9	21.2	29.2	30.0	30.0	30.0	30.0	30.0	30.0	30.0	30.0	-	-	-	-	-	CNH C-71
	T_{OUT}[kgf•m]	1.62	2.16	2.98	3.06	3.06	3.06	3.06	3.06	3.06	3.06	3.06	-	-	-	-	-	CNF C-76
	Pro[N]	897	1020	1160	1180	1180	1180	1180	1180	1180	1180	1180	-	-	-	-	-	CNV C-82
	Pro[kgf]	91.4	104.0	118	120	120	120	120	120	120	120	120	-	-	-	-	-	
6070	P_1[kW]	0.347	0.347	0.347	0.347	0.324	0.286	0.231	0.194	0.168	0.139	0.113	0.095	0.082	-	-	-	
	T_{OUT}[N•m]	19.3	25.7	35.3	41.7	45.0	45.0	45.0	45.0	45.0	45.0	45.0	45.0	45.0	-	-	-	CNH C-71
	T_{OUT}[kgf•m]	1.97	2.62	3.60	4.25	4.59	4.59	4.59	4.59	4.59	4.59	4.59	4.59	4.59	-	-	-	CNF C-76
	Pro[N]	1550	1710	1770	1770	1770	1770	1770	1770	1770	1770	1770	1750	1770	-	-	-	CNV C-82
	Pro[kgf]	158	174	180	180	180	180	180	180	180	180	180	178	180	-	-	-	
6075	P_1[kW]	0.407	0.386	0.407	0.407	0.404	0.381	0.309	0.245	0.223	0.185	0.151	0.119	0.101	-	-	-	
	T_{OUT}[N•m]	22.6	28.6	41.4	49.0	56.1	60.0	60.0	56.8	60.0	60.0	60.0	56.4	55.1	-	-	-	CNH C-71
	T_{OUT}[kgf•m]	2.30	2.92	4.22	4.99	5.72	6.12	6.12	5.79	6.12	6.12	6.12	5.75	5.62	-	-	-	CNF C-76
	Pro[N]	1540	1700	1770	1770	1770	1770	1770	1770	1770	1770	1660	1590	1620	-	-	-	CNV C-82
	Pro[kgf]	157	173	180	180	180	180	180	180	180	180	169	162	165	-	-	-	
6080	P_1[kW]	0.592	0.592	0.592	0.592	0.576	0.508	0.397	0.340	0.298	0.247	0.201	0.169	0.146	0.120	0.090	-	
	T_{OUT}[N•m]	32.9	43.9	60.3	71.3	80.0	80.0	77.2	78.7	80.0	80.0	80.0	80.0	80.0	78.9	72.5	-	CNH C-71
	T_{OUT}[kgf•m]	3.35	4.48	6.15	7.27	8.15	8.15	7.87	8.02	8.15	8.15	8.15	8.15	8.15	8.04	7.39	-	CNF C-76
	Pro[N]	2160	2330	2560	2560	2560	2560	2560	2560	2500	2560	2540	2480	2510	2470	2510	-	CNV C-82
	Pro[kgf]	220	238	261	261	261	261	261	261	255	261	259	253	256	252	256	-	
6085	P_1[kW]	0.778	0.778	0.778	0.778	0.720	0.635	0.397	0.432	0.372	0.309	0.251	0.212	0.183	0.152	0.121	-	
	T_{OUT}[N•m]	43.2	57.6	79.2	93.6	100	100	77.2	100	100	100	100	100	100	100	97.6	-	CNH C-71
	T_{OUT}[kgf•m]	4.40	5.87	8.07	9.54	10.2	10.2	7.87	10.2	10.2	10.2	10.2	10.2	10.2	10.2	9.95	-	CNF C-76
	Pro[N]	2140	2310	2530	2560	2560	2560	2560	2360	2300	2420	2340	2290	2310	2260	2280	-	CNV C-82
	Pro[kgf]	218	235	258	261	261	261	261	241	234	247	239	233	235	230	232	-	
6090	P_1[kW]	1.15	1.15	1.15	1.15	1.08	0.953	0.758	0.648	0.559	0.463	0.377	0.315	0.267	0.201	0.186	0.098	
	T_{OUT}[N•m]	63.7	84.9	117	138	150	150	147	150	150	150	150	149	146	132	150	108	CNH C-71
	T_{OUT}[kgf•m]	6.49	8.65	11.9	14.1	15.3	15.3	15.0	15.3	15.3	15.3	15.3	15.2	14.9	13.5	15.3	11.0	CNF C-76
	Pro[N]	3180	3340	3340	3340	3340	3340	3340	3280	3290	3300	3310	3280	3300	3310	3310	3310	CNV C-82
	Pro[kgf]	324	340	340	340	340	340	340	334	335	336	337	334	336	337	337	337	
6095	P_1[kW]	1.52	1.52	1.52	1.51	1.44	1.27	1.03	0.745	0.698	0.610	0.471	0.325	0.267	0.201	0.195	0.098	
	T_{OUT}[N•m]	84.2	112	154	182	200	200	200	172	187	198	187	153	146	132	157	108	CNH C-71
	T_{OUT}[kgf•m]	8.58	11.4	15.7	18.6	20.4	20.4	20.4	17.5	19.1	20.2	19.1	15.6	14.9	13.5	16.0	11.0	CNF C-76
	Pro[N]	3130	3340	3340	3340	3340	3340	3340	3240	3220	3210	3240	3280	3300	3310	3300	3310	CNV C-82
	Pro[kgf]	319	340	340	340	340	340	340	330	328	327	330	334	336	337	336	337	
6100	P_1[kW]	2.35	2.35	2.35	2.08	1.80	1.59	1.29	1.08	0.931	0.772	0.628	0.530	0.458	0.380	0.310	0.210	
	T_{OUT}[N•m]	130	174	239	250	250	250	250	250	250	250	250	250	250	250	250	231	CNH C-71
	T_{OUT}[kgf•m]	13.3	17.7	24.4	25.5	25.5	25.5	25.5	25.5	25.5	25.5	25.5	25.5	25.5	25.5	25.5	23.5	CNF C-76
	Pro[N]	4620	5130	5400	5400	5400	5400	5400	5400	5400	5400	5400	5400	5400	5380	5400	5370	CNV C-82
	Pro[kgf]	471	523	550	550	550	550	550	550	550	550	550	550	550	548	550	547	
6105	P_1[kW]	3.02	2.78	2.86	2.49	2.16	1.91	1.54	1.30	1.12	0.926	0.754	0.629	0.530	0.402	0.372	0.235	
	T_{OUT}[N•m]	168	206	291	300	300	300	300	300	300	300	300	297	290	264	300	258	CNH C-71
	T_{OUT}[kgf•m]	17.1	21.0	29.7	30.6	30.6	30.6	30.6	30.6	30.6	30.6	30.6	30.3	29.6	26.9	30.6	26.3	CNF C-76
	Pro[N]	4570	5090	5400	5400	5400	5400	5400	5400	5400	5400	5400	5310	5260	5370	4780	5350	CNV C-82
	Pro[kgf]	466	519	550	550	550	550	550	550	550	550	550	541	536	547	487	545	
6110	P_1[kW]	3.48	3.55	3.54	2.99	2.59	2.29	1.85	1.56	1.34	1.11	0.904	0.762	0.659	0.548	0.447	-	
	T_{OUT}[N•m]	193	263	360	360	360	360	360	360	360	360	360	360	360	360	360	-	CNH C-71
	T_{OUT}[kgf•m]	19.7	26.8	36.7	36.7	36.7	36.7	36.7	36.7	36.7	36.7	36.7	36.7	36.7	36.7	36.7	-	CNF C-76
	Pro[N]	5180	5740	6510	6770	7260	7370	7610	7340	7200	7280	7590	7590	7610	7580	7600	-	CNV C-82
	Pro[kgf]	528	585	664	690	740	751	776	748	734	742	774	774	776	773	775	-	
6115	P_1[kW]	3.48	3.92	3.92	3.49	3.02	2.67	2.16	1.81	1.56	1.30	1.06	0.890	0.769	0.639	0.521	-	
	T_{OUT}[N•m]	193	290	399	420	420	420	420	420	420	420	420	420	420	420	420	-	CNH C-71
	T_{OUT}[kgf•m]	19.7	29.6	40.7	42.8	42.8	42.8	42.8	42.8	42.8	42.8	42.8	42.8	42.8	42.8	42.8	-	CNF C-76
	Pro[N]	5180	5700	6460	6700	7190	7300	7460	7150	7010	7090	7370	7410	7430	7390	7410	-	CNV C-82
	Pro[kgf]	528	581	659	683	733	744	760	729	715	723	751	755	757	753	755	-	
6120	P_1[kW]	5.07	5.07	5.07	4.36	3.78	3.30	2.68	2.27	1.94	1.62	1.32	1.11	0.961	0.799	0.652	-	
	T_{OUT}[N•m]	282	375	516	525	525	520	522	525	520	525	525	525	525	525	525	-	CNH C-71
	T_{OUT}[kgf•m]	28.7	38.2	52.6	53.5	53.5	53.0	53.2	53.5	53.0	53.5	53.5	53.5	53.5	53.5	53.5	-	CNF C-76
	Pro[N]	5810	6450	7260	7540	8160	8280	9150	9640	9810	9810	9810	9810	9810	9810	9780	-	CNV C-82
	Pro[kgf]	592	657	740	769	832	844	933	983	1000	1000	1000	1000	1000	1000	997	-	
Frame Size	Ratio[Z]	6	8	11	13	15	17	21	25	29	35	43	51	59	71	87	119	Page of Dim.
	n_2 [r/min]	163	123	89.1	75.4	65.3	57.6	46.7	39.2	33.8	28.0	22.8	19.2	16.6	13.8	11.3	8.24	

Note: 1. Allowable radial load Pro is the value at the midpoint of the output shaft. Refer to pages F-11~12 when radial load is off the midpoint of output shaft and for checking thrust load.
2. Refer to pages F-15~16 for allowable radial load for input shaft.

Selection Tables 6000 Series Reducer

Single Reduction Ratio 6 ~ 119 Frame Size: 6125 ~ 6195

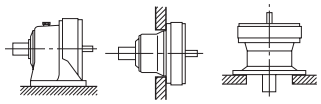

n_1: Input Speed [r/min]
n_2: Output Speed [r/min]
P_1: Allowable input power [kW]
T_{out}: Allowable output torque [N·m, kgf·m]
Pro: Allowable output shaft radial load [N, kgf]
*Consult us for Pro of CNF and CHF type.

Input Speed n_1 = 980 r/min

Frame Size	n_2 [r/min]	163	123	89.1	75.4	65.3	57.6	46.7	39.2	33.8	28.0	22.8	19.2	16.6	13.8	11.3	8.24	Page of Dim.
	Ratio[Z]	6	8	11	13	15	17	21	25	29	35	43	51	59	71	87	119	
6125	P_1[kW]	6.40	5.97	5.18	4.68	4.54	4.00	3.24	2.72	2.35	1.94	1.58	1.33	1.15	0.843	0.761	-	
	T_{OUT}[N•m]	355	442	527	563	630	630	630	630	630	630	630	630	630	554	613	-	CNH C-71
	T_{OUT}[kgf•m]	36.2	45.1	53.7	57.4	64.2	64.2	64.2	64.2	64.2	64.2	64.2	64.2	64.2	56.5	62.5	-	CNF C-76
	Pro[N]	5730	6380	7250	7510	8050	8180	9050	9540	9810	9810	9810	9810	9810	9810	9590	-	CNV C-82
	Pro[kgf]	584	650	739	766	821	834	923	972	1000	1000	1000	1000	1000	1000	978	-	
6130	P_1[kW]	9.10	8.95	7.66	6.48	5.62	4.96	4.01	3.37	2.91	2.41	1.96	1.81	1.57	1.30	1.05	-	
	T_{OUT}[N•m]	505	663	780	780	780	780	780	780	780	780	780	855	855	855	848	-	CHH C-72
	T_{OUT}[kgf•m]	51.5	67.6	79.5	79.5	79.5	79.5	79.5	79.5	79.5	79.5	79.5	87.2	87.2	87.2	86.4	-	CHF C-77
	Pro[N]	6620	7350	8460	8890	9130	9840	10600	11100	11700	12400	13300	13900	14600	14700	14700	-	CVV C-83
	Pro[kgf]	675	749	862	906	931	1000	1080	1130	1190	1260	1360	1420	1490	1500	1500	-	
6135	P_1[kW]	9.96	9.20	9.23	7.58	6.77	5.97	4.84	3.89	3.50	2.90	2.36	1.89	1.81	1.50	1.22	-	
	T_{OUT}[N•m]	553	682	940	912	940	940	940	900	940	940	940	892	987	987	979	-	CHH C-72
	T_{OUT}[kgf•m]	56.4	69.5	95.8	93.0	95.8	95.8	95.8	91.7	95.8	95.8	95.8	90.9	101	101	99.8	-	CHF C-77
	Pro[N]	6560	7330	8310	8780	9010	9720	10500	11000	11600	12200	13200	13900	14500	14700	14700	-	CVV C-83
	Pro[kgf]	669	747	847	895	918	991	1070	1120	1180	1240	1350	1420	1480	1500	1500	-	
6140	P_1[kW]	12.2	11.6	12.0	10.2	8.82	7.78	6.30	5.29	4.56	3.78	3.08	2.59	2.24	1.86	1.52	-	
	T_{OUT}[N•m]	678	863	1230	1230	1230	1230	1230	1230	1230	1230	1230	1230	1230	1230	1230	-	CHH C-72
	T_{OUT}[kgf•m]	69.1	88.0	125	125	125	125	125	125	125	125	125	125	125	125	125	-	CHF C-77
	Pro[N]	10300	11400	12800	13100	13800	14400	15500	16000	16000	16000	16000	16000	16000	16000	16000	-	CVV C-83
	Pro[kgf]	1050	1160	1300	1340	1410	1470	1580	1630	1630	1630	1630	1630	1630	1630	1630	-	
6145	P_1[kW]	12.2	11.6	12.1	11.4	9.78	8.71	6.88	5.92	5.10	4.23	3.44	2.74	2.36	1.94	1.55	-	
	T_{OUT}[N•m]	678	863	1230	1370	1360	1370	1340	1370	1370	1370	1370	1290	1290	1280	1250	-	CHH C-72
	T_{OUT}[kgf•m]	69.1	88.0	125	140	139	140	137	140	140	140	140	131	131	130	127	-	CHF C-77
	Pro[N]	10300	11400	12800	13100	13700	14400	15400	16000	15800	16000	15700	15900	16000	16000	16000	-	CVV C-83
	Pro[kgf]	1050	1160	1300	1340	1400	1470	1570	1630	1610	1630	1600	1620	1630	1630	1630	-	
6160	P_1[kW]	20.3	19.7	17.2	14.6	12.6	11.2	9.03	7.58	6.54	5.42	4.36	3.72	3.21	2.67	2.18	-	
	T_{OUT}[N•m]	1130	1460	1760	1760	1760	1760	1760	1760	1760	1760	1740	1760	1760	1760	1760	-	CHH C-72
	T_{OUT}[kgf•m]	115	149	179	179	179	179	179	179	179	179	177	179	179	179	179	-	CHF C-77
	Pro[N]	11300	12600	14300	15100	16100	16700	18100	19000	19900	21200	22100	22100	22100	22100	22100	-	CVV C-84
	Pro[kgf]	1150	1280	1460	1540	1640	1700	1850	1940	2030	2160	2250	2250	2250	2250	2250	-	
6165	P_1[kW]	23.8	22.5	20.6	17.4	15.1	13.3	10.8	9.07	7.82	6.48	5.28	4.45	3.84	3.19	2.55	-	
	T_{OUT}[N•m]	1320	1670	2100	2100	2100	2100	2100	2100	2100	2100	2100	2100	2100	2100	2050	-	CHH C-72
	T_{OUT}[kgf•m]	135	170	214	214	214	214	214	214	214	214	214	214	214	214	209	-	CHF C-77
	Pro[N]	11100	12400	14100	14900	15900	16500	17800	18800	19700	21000	22100	22100	22100	22100	21800	-	CVV C-84
	Pro[kgf]	1130	1260	1440	1520	1620	1680	1810	1920	2010	2140	2250	2250	2250	2250	2220	-	
6170	P_1[kW]	27.6	27.6	24.8	21.0	18.2	16.1	13.0	10.9	9.42	7.81	6.36	5.36	4.63	3.85	3.14	-	
	T_{OUT}[N•m]	1530	2040	2530	2530	2530	2530	2530	2530	2530	2530	2530	2530	2530	2530	2530	-	CHH C-72
	T_{OUT}[kgf•m]	156	208	258	258	258	258	258	258	258	258	258	258	258	258	258	-	CHF C-77
	Pro[N]	12700	13900	16000	16800	17700	18600	20300	21200	22400	23900	25600	26800	28200	29500	29500	-	CVV C-84
	Pro[kgf]	1290	1420	1630	1710	1800	1900	2070	2160	2280	2440	2610	2730	2870	3010	3010	-	
6175	P_1[kW]	30.1	30.1	30.1	26.2	22.3	20.0	16.2	13.6	11.7	9.72	7.91	6.67	5.77	4.79	3.91	-	
	T_{OUT}[N•m]	1670	2230	3070	3150	3100	3150	3150	3150	3150	3150	3150	3150	3150	3150	3150	-	CHH C-72
	T_{OUT}[kgf•m]	170	227	313	321	316	321	321	321	321	321	321	321	321	321	321	-	CHF C-77
	Pro[N]	12600	13800	15600	16400	17300	18200	20000	20800	22100	23600	25200	26500	27900	29500	29500	-	CVV C-84
	Pro[kgf]	1280	1410	1590	1670	1760	1860	2040	2120	2250	2410	2570	2700	2840	3010	3010	-	
6180	P_1[kW]	-	-	35.2	33.7	29.2	25.8	20.8	17.5	15.1	12.5	10.2	8.58	7.42	6.16	5.04	-	
	T_{OUT}[N•m]	-	-	3580	4060	4060	4060	4050	4050	4050	4050	4060	4050	4050	4050	4060	-	CHH C-72
	T_{OUT}[kgf•m]	-	-	365	414	414	414	413	413	413	413	414	413	413	413	414	-	CHF C-77
	Pro[N]	-	-	21400	22200	23400	24900	27100	28300	29700	31900	34300	35700	37400	39900	41700	-	CVV C-84
	Pro[kgf]	-	-	2180	2260	2390	2540	2760	2880	3030	3250	3500	3640	3810	4070	4250	-	
6185	P_1[kW]	-	-	39.0	39.0	29.8	28.3	25.7	21.6	18.6	15.4	12.6	10.6	9.15	6.87	6.21	-	
	T_{OUT}[N•m]	-	-	3970	4690	4130	4450	5000	5000	5000	5000	5000	5000	5000	4510	5000	-	CHH C-72
	T_{OUT}[kgf•m]	-	-	405	478	421	454	510	510	510	510	510	510	510	460	510	-	CHF C-77
	Pro[N]	-	-	21200	21900	23400	24700	26700	27900	29300	31500	33900	35400	37100	39800	41700	-	CVV C-84
	Pro[kgf]	-	-	2160	2230	2390	2520	2720	2840	2990	3210	3460	3610	3780	4060	4250	-	
6190	P_1[kW]	-	-	41.0	41.0	41.0	40.5	32.8	27.6	23.8	19.7	16.0	13.5	11.7	9.71	7.92	-	
	T_{OUT}[N•m]	-	-	4180	4930	5690	6380	6380	6380	6380	6380	6380	6380	6380	6380	6380	-	CHH C-72
	T_{OUT}[kgf•m]	-	-	426	503	580	650	650	650	650	650	650	650	650	650	650	-	CHF C-77
	Pro[N]	-	-	30300	31300	32700	34500	37600	39500	41600	44100	47700	49900	52400	55800	58900	-	CVV C-84
	Pro[kgf]	-	-	3090	3190	3330	3520	3830	4030	4240	4500	4860	5090	5340	5690	6000	-	
6195	P_1[kW]	-	-	48.1	48.1	48.1	48.1	40.9	34.4	29.6	24.6	20.0	16.9	14.6	12.1	9.88	-	
	T_{OUT}[N•m]	-	-	4900	5790	6680	7570	7960	7960	7960	7960	7960	7960	7960	7960	7960	-	CHH C-72
	T_{OUT}[kgf•m]	-	-	499	590	681	772	811	811	811	811	811	811	811	811	811	-	CHF C-77
	Pro[N]	-	-	30000	31000	32300	34100	37100	39000	41200	43700	47200	49400	52000	55300	58400	-	CVV C-84
	Pro[kgf]	-	-	3060	3160	3290	3480	3780	3980	4200	4450	4810	5040	5300	5640	5950	-	
Frame Size	Ratio[Z]	6	8	11	13	15	17	21	25	29	35	43	51	59	71	87	119	Page of Dim.
	n_2 [r/min]	163	123	89.1	75.4	65.3	57.6	46.7	39.2	33.8	28.0	22.8	19.2	16.6	13.8	11.3	8.24	

Note: 1. Allowable radial load Pro is the value at the midpoint of the output shaft. Refer to pages F-11~12 when radial load is off the midpoint of output shaft and for checking thrust load.
2. Refer to pages F-15~16 for allowable radial load for input shaft.

Selection Tables 6000 Series Reducer

Single Reduction Ratio 6 ~ 119 Frame Size: 6205 ~ 6275

Input Speed	n_1 = 980 r/min	n_1: Input Speed [r/min]	T_{out}: Allowable output torque [N·m, kgf·m]
		n_2: Output Speed [r/min]	Pro: Allowable output shaft radial load [N, kgf]
		P_1: Allowable input power [kW]	*Consult us for Pro of CNF and CHF type.

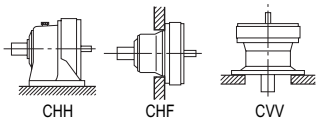

Frame Size	n_2 [r/min]	163	123	89.1	75.4	65.3	57.6	46.7	39.2	33.8	28.0	22.8	19.2	16.6	13.8	11.3	8.24	Page of Dim.
	Ratio[Z]	6	8	11	13	15	17	21	25	29	35	43	51	59	71	87	119	
6205	P_1[kW]	-	-	59.7	-	59.7	-	47.7	-	34.4	-	23.4	-	17.0	-	10.9	-	
	T_{OUT}[N•m]	-	-	6080	-	8290	-	9270	-	9230	-	9300	-	9300	-	8760	-	CHH C-72
	T_{OUT}[kgf•m]	-	-	620	-	845	-	945	-	941	-	948	-	948	-	893	-	CHF C-77
	Pro[N]	-	-	57700	-	61800	-	69400	-	76000	-	84100	-	84100	-	84100	-	CVV C-84
	Pro[kgf]	-	-	5880	-	6300	-	7070	-	7750	-	8570	-	8570	-	8570	-	
6215	P_1[kW]	-	-	75.3	-	75.3	-	64.3	-	47.1	-	31.8	-	23.2	-	14.0	-	
	T_{OUT}[N•m]	-	-	7670	-	10500	-	12500	-	12700	-	12700	-	12700	-	11300	-	CHH C-72
	T_{OUT}[kgf•m]	-	-	782	-	1070	-	1270	-	1290	-	1290	-	1290	-	1150	-	CHF C-77
	Pro[N]	-	-	58000	-	62000	-	70100	-	76600	-	87100	-	95100	-	104000	-	CVV C-84
	Pro[kgf]	-	-	5910	-	6320	-	7150	-	7810	-	8880	-	9690	-	10600	-	
6225	P_1[kW]	-	-	99.5	-	99.5	-	76.1	-	56.0	-	40.2	-	29.1	-	18.7	-	
	T_{OUT}[N•m]	-	-	10100	-	13800	-	14800	-	15000	-	16000	-	15900	-	15100	-	CHH C-72
	T_{OUT}[kgf•m]	-	-	1030	-	1410	-	1510	-	1530	-	1630	-	1620	-	1540	-	CHF C-77
	Pro[N]	-	-	61000	-	65500	-	73700	-	80800	-	91700	-	100000	-	113000	-	CVV C-84
	Pro[kgf]	-	-	6220	-	6680	-	7510	-	8240	-	9350	-	10200	-	11500	-	
6235	P_1[kW]	-	-	113	-	113	-	97.2	-	70.4	-	47.6	-	34.6	-	21.3	-	
	T_{OUT}[N•m]	-	-	11500	-	15700	-	18900	-	18900	-	18900	-	18900	-	17200	-	CHH C-72
	T_{OUT}[kgf•m]	-	-	1170	-	1600	-	1930	-	1930	-	1930	-	1930	-	1750	-	CHF C-77
	Pro[N]	-	-	76700	-	81700	-	91900	-	101000	-	114000	-	125000	-	141000	-	CVV C-84
	Pro[kgf]	-	-	7820	-	8330	-	9370	-	10300	-	11600	-	12700	-	14400	-	
6245	P_1[kW]	-	-	132	-	132	-	120	-	94.2	-	64.8	-	47.2	-	28.1	-	
	T_{OUT}[N•m]	-	-	13400	-	18300	-	23300	-	25300	-	25800	-	25800	-	22600	-	CHH C-72
	T_{OUT}[kgf•m]	-	-	1370	-	1870	-	2380	-	2580	-	2630	-	2630	-	2300	-	CHF C-77
	Pro[N]	-	-	85200	-	91100	-	102000	-	112000	-	126000	-	138000	-	157000	-	CVV C-84
	Pro[kgf]	-	-	8690	-	9290	-	10400	-	11400	-	12800	-	14100	-	16000	-	
6255	P_1[kW]	-	-	151	-	151	-	151	-	118	-	77.9	-	56.8	-	38.5	-	
	T_{OUT}[N•m]	-	-	15300	-	20900	-	29300	-	31800	-	31000	-	31000	-	31000	-	CHH C-72
	T_{OUT}[kgf•m]	-	-	1560	-	2130	-	2990	-	3240	-	3160	-	3160	-	3160	-	CHF C-77
	Pro[N]	-	-	104000	-	112000	-	124000	-	137000	-	155000	-	170000	-	192000	-	CVV C-84
	Pro[kgf]	-	-	10600	-	11400	-	12600	-	14000	-	15800	-	17300	-	19600	-	
6265	P_1[kW]	-	-	175	-	175	-	172	-	159	-	113	-	84.2	-	53.4	-	
	T_{OUT}[N•m]	-	-	17800	-	24300	-	33400	-	42700	-	45000	-	46000	-	43000	-	CHH C-72
	T_{OUT}[kgf•m]	-	-	1810	-	2480	-	3400	-	4350	-	4590	-	4690	-	4380	-	CHF C-77
	Pro[N]	-	-	128000	-	137000	-	152000	-	168000	-	189000	-	207000	-	234000	-	CVV C-84
	Pro[kgf]	-	-	13000	-	14000	-	15500	-	17100	-	19300	-	21100	-	23900	-	
6275	P_1[kW]	-	-	-	-	-	-	-	-	159	-	151	-	125	-	53.4	-	
	T_{OUT}[N•m]	-	-	-	-	-	-	-	-	42700	-	60000	-	68200	-	43000	-	CHH C-72
	T_{OUT}[kgf•m]	-	-	-	-	-	-	-	-	4350	-	6120	-	6950	-	4380	-	
	Pro[N]	-	-	-	-	-	-	-	-	196000	-	248000	-	248000	-	219000	-	CVV C-84
	Pro[kgf]	-	-	-	-	-	-	-	-	20000	-	25300	-	25300	-	22300	-	
Frame Size	Ratio[Z]	6	8	11	13	15	17	21	25	29	35	43	51	59	71	87	119	Page of Dim.
	n_2 [r/min]	163	123	89.1	75.4	65.3	57.6	46.7	39.2	33.8	28.0	22.8	19.2	16.6	13.8	11.3	8.24	

Note: 1. Allowable radial load Pro is the value at the midpoint of the output shaft. Refer to pages F-11~12 when radial load is off the midpoint of output shaft and for checking thrust load.
2. Refer to pages F-15~16 for allowable radial load for input shaft.

MEMO

Selection Tables 6000 Series Reducer

Single Reduction Ratio 6 ~ 119 Frame Size: 6060 ~ 6120

Input Speed	n_1 = 1165 r/min	n_1: Input Speed [r/min]	T_{out}: Allowable output torque [N·m, kgf·m]
		n_2: Output Speed [r/min]	Pro: Allowable output shaft radial load [N, kgf]
		P_1: Allowable input power [kW]	*Consult us for Pro of CNF and CHF type.

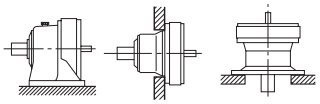

Frame Size	n_2 [r/min]	194	146	106	89.6	77.7	68.5	55.5	46.6	40.2	33.3	27.1	22.8	19.7	16.4	13.4	9.79	Page of Dim.
	Ratio[Z]	6	8	11	13	15	17	21	25	29	35	43	51	59	71	87	119	
6060	P_1[kW]	0.200	0.200	0.200	0.200	0.200	0.181	0.147	0.110	0.106	0.088	0.072	-	-	-	-	-	CNH C-71
	T_{OUT}[N•m]	9.35	12.5	17.1	20.2	23.4	24.0	24.0	21.4	24.0	24.0	24.0	-	-	-	-	-	CNF C-76
	T_{OUT}[kgf•m]	0.953	1.27	1.74	2.06	2.39	2.45	2.45	2.18	2.45	2.45	2.45	-	-	-	-	-	CNV C-82
	Pro[N]	857	978	1180	1180	1180	1180	1180	1180	1180	1180	1180	-	-	-	-	-	
	Pro[kgf]	87.4	100	120	120	120	120	120	120	120	120	120	-	-	-	-	-	
6065	P_1[kW]	0.286	0.286	0.286	0.286	0.257	0.227	0.183	0.154	0.133	0.110	0.090	-	-	-	-	-	
	T_{OUT}[N•m]	13.4	17.8	24.5	29.0	30.0	30.0	30.0	30.0	30.0	30.0	30.0	-	-	-	-	-	CNH C-71
	T_{OUT}[kgf•m]	1.37	1.81	2.50	2.96	3.06	3.06	3.06	3.06	3.06	3.06	3.06	-	-	-	-	-	CNF C-76
	Pro[N]	850	968	1180	1180	1180	1180	1180	1180	1180	1180	1180	-	-	-	-	-	CNV C-82
	Pro[kgf]	86.6	98.7	120	120	120	120	120	120	120	120	120	-	-	-	-	-	
6070	P_1[kW]	0.347	0.347	0.347	0.347	0.347	0.340	0.275	0.230	0.199	0.165	0.134	0.100	0.098	-	-	-	
	T_{OUT}[N•m]	16.2	21.6	29.7	35.1	40.5	45.0	45.0	44.7	45.0	45.0	45.0	39.7	45.0	-	-	-	CNH C-71
	T_{OUT}[kgf•m]	1.65	2.20	3.03	3.58	4.13	4.59	4.59	4.56	4.59	4.59	4.59	4.05	4.59	-	-	-	CNF C-76
	Pro[N]	1470	1620	1770	1770	1770	1770	1770	1770	1770	1770	1770	1770	1770	-	-	-	CNV C-82
	Pro[kgf]	150	165	180	180	180	180	180	180	180	180	180	180	180	-	-	-	
6075	P_1[kW]	0.407	0.407	0.407	0.407	0.407	0.407	0.367	0.280	0.264	0.220	0.179	0.136	0.115	-	-	-	
	T_{OUT}[N•m]	19.0	25.3	34.9	41.2	47.5	53.9	60.0	54.6	59.6	60.0	60.0	54.2	52.9	-	-	-	CNH C-71
	T_{OUT}[kgf•m]	1.94	2.58	3.56	4.20	4.84	5.49	6.12	5.57	6.08	6.12	6.12	5.52	5.39	-	-	-	CNF C-76
	Pro[N]	1470	1610	1770	1770	1770	1770	1770	1770	1770	1770	1660	1630	1660	-	-	-	CNV C-82
	Pro[kgf]	150	164	180	180	180	180	180	180	180	180	169	166	169	-	-	-	
6080	P_1[kW]	0.592	0.592	0.592	0.592	0.592	0.592	0.472	0.340	0.340	0.294	0.239	0.192	0.174	0.120	0.090	-	
	T_{OUT}[N•m]	27.7	36.9	50.7	60.0	69.2	78.4	77.2	66.2	76.8	80.0	80.0	76.3	80.0	66.3	61.0	-	CNH C-71
	T_{OUT}[kgf•m]	2.82	3.76	5.17	6.12	7.05	7.99	7.87	6.75	7.83	8.15	8.15	7.78	8.15	6.76	6.22	-	CNF C-76
	Pro[N]	2050	2210	2430	2560	2560	2560	2560	2560	2530	2560	2540	2510	2510	2560	2560	-	CNV C-82
	Pro[kgf]	209	225	248	261	261	261	261	261	258	261	259	256	256	261	261	-	
6085	P_1[kW]	0.778	0.778	0.778	0.778	0.778	0.755	0.472	0.475	0.443	0.356	0.294	0.241	0.218	0.181	0.121	-	
	T_{OUT}[N•m]	36.3	48.5	66.6	78.7	90.8	100	77.2	92.4	100	97.1	98.4	95.8	100	100	82.1	-	CNH C-71
	T_{OUT}[kgf•m]	3.70	4.94	6.79	8.02	9.26	10.2	7.87	9.42	10.2	9.90	10.0	9.77	10.2	10.2	8.37	-	CNF C-76
	Pro[N]	2030	2190	2400	2560	2560	2560	2560	2450	2300	2460	2360	2330	2310	2260	2430	-	CNV C-82
	Pro[kgf]	207	223	245	261	261	261	261	250	234	251	241	238	235	230	248	-	
6090	P_1[kW]	1.15	1.15	1.15	1.15	1.15	1.13	0.758	0.671	0.625	0.550	0.435	0.332	0.298	0.239	0.211	0.117	
	T_{OUT}[N•m]	53.6	71.4	98.2	116	134	150	124	131	141	150	146	132	137	132	143	108	CNH C-71
	T_{OUT}[kgf•m]	5.46	7.28	10.0	11.8	13.7	15.3	12.6	13.4	14.4	15.3	14.9	13.5	14.0	13.5	14.6	11.0	CNF C-76
	Pro[N]	3010	3340	3340	3340	3340	3340	3340	3320	3310	3300	3320	3320	3320	3310	3330	3310	CNV C-82
	Pro[kgf]	307	340	340	340	340	340	340	338	337	336	338	338	338	337	339	337	
6095	P_1[kW]	1.52	1.52	1.52	1.52	1.52	1.51	1.22	0.850	0.784	0.696	0.537	0.361	0.298	0.239	0.223	0.117	
	T_{OUT}[N•m]	70.8	94.4	130	153	177	200	200	166	177	190	180	143	137	132	151	108	CNH C-71
	T_{OUT}[kgf•m]	7.22	9.62	13.3	15.6	18.0	20.4	20.4	16.9	18.0	19.4	18.3	14.6	14.0	13.5	15.4	11.0	CNF C-76
	Pro[N]	2980	3290	3340	3340	3340	3340	3340	3250	3240	3220	3260	3290	3320	3310	3310	3310	CNV C-82
	Pro[kgf]	304	335	340	340	340	340	340	331	330	328	332	335	338	337	337	337	
6100	P_1[kW]	2.35	2.35	2.35	2.35	2.14	1.89	1.53	1.27	1.11	0.917	0.747	0.560	0.516	0.436	0.369	0.210	
	T_{OUT}[N•m]	110	146	201	238	250	250	250	247	250	250	250	222	237	241	250	195	CNH C-71
	T_{OUT}[kgf•m]	11.2	14.9	20.5	24.3	25.5	25.5	25.5	25.2	25.5	25.5	25.5	22.6	24.2	24.6	25.5	19.9	CNF C-76
	Pro[N]	4380	4870	5400	5400	5400	5400	5400	5400	5400	5400	5400	5400	5400	5390	5400	5390	CNV C-82
	Pro[kgf]	446	496	550	550	550	550	550	550	550	550	550	550	550	549	550	549	
6105	P_1[kW]	3.18	3.18	3.18	2.96	2.57	2.27	1.83	1.54	1.33	1.10	0.896	0.699	0.603	0.448	0.425	0.262	
	T_{OUT}[N•m]	149	198	272	300	300	300	300	300	300	300	300	278	277	248	288	243	CNH C-71
	T_{OUT}[kgf•m]	15.2	20.2	27.7	30.6	30.6	30.6	30.6	30.6	30.6	30.6	30.6	28.3	28.2	25.3	29.4	24.8	CNF C-76
	Pro[N]	4320	4800	5400	5400	5400	5400	5400	5400	5400	5400	5400	5400	5400	5380	5090	5360	CNV C-82
	Pro[kgf]	440	489	550	550	550	550	550	550	550	550	550	550	550	548	519	546	
6110	P_1[kW]	3.55	3.55	3.55	3.55	3.08	2.72	2.20	1.85	1.59	1.32	1.08	0.906	0.784	0.651	0.531	-	
	T_{OUT}[N•m]	166	221	304	359	360	360	360	360	360	360	360	360	360	360	360	-	CNH C-71
	T_{OUT}[kgf•m]	16.9	22.5	31.0	36.6	36.7	36.7	36.7	36.7	36.7	36.7	36.7	36.7	36.7	36.7	36.7	-	CNF C-76
	Pro[N]	4910	5450	6180	6370	6830	6930	7390	7340	7200	7280	7590	7590	7610	7580	7600	-	CNV C-82
	Pro[kgf]	501	556	630	649	696	706	753	748	734	742	774	774	776	773	775	-	
6115	P_1[kW]	3.92	3.92	3.92	3.90	3.60	3.17	2.57	2.16	1.86	1.54	1.25	1.06	0.914	0.758	0.620	-	
	T_{OUT}[N•m]	183	244	336	395	420	420	420	420	420	420	420	420	420	419	420	-	CNH C-71
	T_{OUT}[kgf•m]	18.7	24.9	34.3	40.3	42.8	42.8	42.8	42.8	42.8	42.8	42.8	42.8	42.8	42.7	42.8	-	CNF C-76
	Pro[N]	4890	5420	6150	6330	6760	6870	7320	7150	7010	7090	7370	7410	7430	7420	7410	-	CNV C-82
	Pro[kgf]	498	552	627	645	689	700	746	729	715	723	751	755	757	756	755	-	
6120	P_1[kW]	5.07	5.07	5.07	5.07	4.49	3.93	3.19	2.70	2.30	1.93	1.57	1.32	1.14	0.950	0.775	-	
	T_{OUT}[N•m]	237	316	434	513	525	520	522	525	520	525	525	525	525	525	525	-	CNH C-71
	T_{OUT}[kgf•m]	24.2	32.2	44.2	52.3	53.5	53.0	53.2	53.5	53.0	53.5	53.5	53.5	53.5	53.5	53.5	-	CNF C-76
	Pro[N]	5510	6130	6910	7100	7670	7790	8610	9070	9470	9810	9810	9810	9810	9810	9780	-	CNV C-82
	Pro[kgf]	562	625	704	724	782	794	878	925	965	1000	1000	1000	1000	1000	997	-	
Frame Size	Ratio[Z]	6	8	11	13	15	17	21	25	29	35	43	51	59	71	87	119	Page of Dim.
	n_2 [r/min]	194	146	106	89.6	77.7	68.5	55.5	46.6	40.2	33.3	27.1	22.8	19.7	16.4	13.4	9.79	

Note: 1. Allowable radial load Pro is the value at the midpoint of the output shaft. Refer to pages F-11~12 when radial load is off the midpoint of output shaft and for checking thrust load.
2. Refer to pages F-15~16 for allowable radial load for input shaft.

Selection Tables 6000 Series Reducer

Single Reduction Ratio 6 ~ 119 Frame Size: 6125 ~ 6195

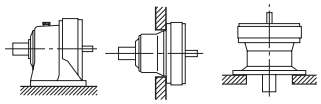

CHH/CNH CHF/CNF CVV/CNV

n_1: Input Speed [r/min]
n_2: Output Speed [r/min]
P_1: Allowable input power [kW]
T_{out}: Allowable output torque [N·m, kgf·m]
Pro: Allowable output shaft radial load [N, kgf]
*Consult us for Pro of CNF and CHF type.

Input Speed n_1 = 1165 r/min

Frame Size	n_2 [r/min]	194	146	106	89.6	77.7	68.5	55.5	46.6	40.2	33.3	27.1	22.8	19.7	16.4	13.4	9.79	Page of Dim.
	Ratio[Z]	6	8	11	13	15	17	21	25	29	35	43	51	59	71	87	119	
6125	P_1[kW]	6.96	6.82	5.91	5.34	5.39	4.76	3.85	3.24	2.79	2.31	1.88	1.59	1.37	0.963	0.868	-	
	T_{OUT}[N•m]	325	425	506	540	630	630	630	630	630	630	630	630	630	532	588	-	CNH C-71
	T_{OUT}[kgf•m]	33.1	43.3	51.6	55.0	64.2	64.2	64.2	64.2	64.2	64.2	64.2	64.2	64.2	54.2	59.9	-	CNF C-76
	Pro[N]	5420	6010	6840	7080	7560	7690	8510	8980	9380	9810	9810	9810	9810	9810	9650	-	CNV C-82
	Pro[kgf]	552	613	697	722	771	784	867	915	956	1000	1000	1000	1000	1000	984	-	
6130	P_1[kW]	9.39	9.39	9.11	7.70	6.68	5.89	4.77	4.01	3.45	2.86	2.33	2.07	1.79	1.49	1.21	-	
	T_{OUT}[N•m]	439	585	780	780	780	780	780	780	780	780	780	821	821	821	821	-	CHH C-72
	T_{OUT}[kgf•m]	44.8	59.6	79.5	79.5	79.5	79.5	79.5	79.5	79.5	79.5	79.5	83.7	83.7	83.7	83.7	-	CHF C-77
	Pro[N]	6290	6980	7940	8360	8580	9260	9960	10400	11000	11600	12600	13100	13800	14700	14700	-	CVV C-83
	Pro[kgf]	641	712	809	852	875	944	1020	1060	1120	1180	1280	1340	1410	1500	1500	-	
6135	P_1[kW]	11.3	10.5	10.7	8.65	8.05	7.10	5.69	4.62	4.13	3.45	2.81	2.16	2.06	1.71	1.40	-	
	T_{OUT}[N•m]	528	654	916	876	940	940	930	900	933	940	940	856	948	948	948	-	CHH C-72
	T_{OUT}[kgf•m]	53.8	66.7	93.4	89.3	95.8	95.8	94.8	91.7	95.1	95.8	95.8	87.3	96.6	96.6	96.6	-	CHF C-77
	Pro[N]	6190	6910	7820	8280	8460	9140	9840	10300	10900	11500	12400	13100	13700	14600	14700	-	CVV C-83
	Pro[kgf]	631	704	797	844	862	932	1000	1050	1110	1170	1260	1340	1400	1490	1500	-	
6140	P_1[kW]	13.0	13.0	13.0	12.1	10.5	9.25	7.49	6.29	5.42	4.49	3.66	3.08	2.67	2.22	1.81	-	
	T_{OUT}[N•m]	609	811	1120	1230	1230	1230	1230	1230	1230	1230	1230	1230	1230	1230	1230	-	CHH C-72
	T_{OUT}[kgf•m]	62.1	82.7	114	125	125	125	125	125	125	125	125	125	125	125	125	-	CHF C-77
	Pro[N]	9820	10900	12200	12400	13100	13700	14700	15400	15800	16000	16000	16000	16000	16000	16000	-	CVV C-83
	Pro[kgf]	1000	1110	1240	1260	1340	1400	1500	1570	1610	1630	1630	1630	1630	1630	1630	-	
6145	P_1[kW]	13.9	13.3	13.8	13.5	11.6	10.3	8.02	7.04	6.07	5.03	3.95	3.13	2.69	2.22	1.83	-	
	T_{OUT}[N•m]	651	828	1180	1360	1360	1370	1310	1370	1370	1370	1320	1240	1240	1230	1240	-	CHH C-72
	T_{OUT}[kgf•m]	66.4	84.4	120	139	139	140	134	140	140	140	135	126	126	125	126	-	CHF C-77
	Pro[N]	9800	10900	12100	12400	13000	13600	14600	15400	15700	16000	15900	16000	16000	16000	16000	-	CVV C-83
	Pro[kgf]	999	1110	1230	1260	1330	1390	1490	1570	1600	1630	1620	1630	1630	1630	1630	-	
6160	P_1[kW]	20.3	19.7	19.7	17.3	15.0	13.1	10.7	9.01	7.77	6.44	5.18	4.42	3.82	3.17	2.59	-	
	T_{OUT}[N•m]	948	1230	1690	1760	1760	1730	1760	1760	1760	1760	1740	1760	1760	1760	1760	-	CHH C-72
	T_{OUT}[kgf•m]	96.6	125	172	179	179	176	179	179	179	179	177	179	179	179	179	-	CHF C-77
	Pro[N]	10800	12000	13500	14200	15100	15700	17000	17900	18700	20000	21500	22100	22100	22100	22100	-	CVV C-84
	Pro[kgf]	1100	1220	1380	1450	1540	1600	1730	1820	1910	2040	2190	2250	2250	2250	2250	-	
6165	P_1[kW]	24.1	24.1	24.1	20.7	18.0	15.9	12.8	10.8	9.30	7.70	6.27	5.29	4.57	3.80	3.03	-	
	T_{OUT}[N•m]	1120	1500	2060	2100	2100	2100	2100	2100	2100	2100	2100	2100	2100	2100	2050	-	CHH C-72
	T_{OUT}[kgf•m]	114	153	210	214	214	214	214	214	214	214	214	214	214	214	209	-	CHF C-77
	Pro[N]	10600	11800	13200	14000	14900	15500	16800	17700	18500	19800	21200	22100	22100	22100	21800	-	CVV C-84
	Pro[kgf]	1080	1200	1350	1430	1520	1580	1710	1800	1890	2020	2160	2250	2250	2250	2220	-	
6170	P_1[kW]	27.6	27.6	27.6	25.0	21.7	19.1	15.5	13.0	11.2	9.28	7.56	6.37	5.51	4.58	3.73	-	
	T_{OUT}[N•m]	1290	1720	2360	2530	2530	2530	2530	2530	2530	2530	2530	2530	2530	2530	2530	-	CHH C-72
	T_{OUT}[kgf•m]	131	175	241	258	258	258	258	258	258	258	258	258	258	258	258	-	CHF C-77
	Pro[N]	12100	13300	15100	15800	16600	17400	19100	19900	21100	22500	24100	25200	26500	28200	29500	-	CVV C-84
	Pro[kgf]	1230	1360	1540	1610	1690	1770	1950	2030	2150	2290	2460	2570	2700	2870	3010	-	
6175	P_1[kW]	30.1	30.1	30.1	30.1	25.4	23.8	19.3	16.2	13.9	11.6	9.41	7.93	6.86	5.70	4.65	-	
	T_{OUT}[N•m]	1410	1880	2580	3050	2970	3150	3150	3150	3150	3150	3150	3150	3150	3150	3150	-	CHH C-72
	T_{OUT}[kgf•m]	144	192	263	311	303	321	321	321	321	321	321	321	321	321	321	-	CHF C-77
	Pro[N]	12000	13200	14900	15400	16300	17000	18700	19600	20700	22100	23700	24900	26200	27900	29500	-	CVV C-84
	Pro[kgf]	1220	1350	1520	1570	1660	1730	1910	2000	2110	2250	2420	2540	2670	2840	3010	-	
6180	P_1[kW]	-	-	35.2	35.2	32.4	30.6	24.8	20.8	17.9	14.9	12.1	10.2	8.82	7.33	5.99	-	
	T_{OUT}[N•m]	-	-	3020	3560	3780	4050	4050	4050	4050	4050	4060	4050	4050	4050	4060	-	CHH C-72
	T_{OUT}[kgf•m]	-	-	308	363	385	413	413	413	413	413	414	413	413	413	414	-	CHF C-77
	Pro[N]	-	-	20300	21000	22100	23400	25500	26600	27900	30000	32300	33600	35300	37600	40600	-	CVV C-84
	Pro[kgf]	-	-	2070	2140	2250	2390	2600	2710	2840	3060	3290	3430	3600	3830	4140	-	
6185	P_1[kW]	-	-	39.0	39.0	34.0	32.3	30.6	25.7	22.1	18.3	14.9	12.6	10.9	8.16	7.38	-	
	T_{OUT}[N•m]	-	-	3340	3950	3970	4280	5000	5000	5000	5000	5000	5000	5000	4510	5000	-	CHH C-72
	T_{OUT}[kgf•m]	-	-	340	403	405	436	510	510	510	510	510	510	510	460	510	-	CHF C-77
	Pro[N]	-	-	20200	20900	22000	23300	25100	26200	27600	29700	31900	33300	34900	37400	40300	-	CVV C-84
	Pro[kgf]	-	-	2060	2130	2240	2380	2560	2670	2810	3030	3250	3390	3560	3810	4110	-	
6190	P_1[kW]	-	-	41.0	41.0	41.0	41.0	39.0	32.8	28.3	23.4	18.8	16.1	13.9	11.5	9.42	-	
	T_{OUT}[N•m]	-	-	3510	4150	4790	5430	6380	6380	6380	6380	6310	6380	6380	6380	6380	-	CHH C-72
	T_{OUT}[kgf•m]	-	-	358	423	488	554	650	650	650	650	643	650	650	650	650	-	CHF C-77
	Pro[N]	-	-	28700	29700	31100	32800	35400	37200	39200	41600	44900	47000	49400	52500	56800	-	CVV C-84
	Pro[kgf]	-	-	2930	3030	3170	3340	3610	3790	4000	4240	4580	4790	5040	5350	5790	-	
6195	P_1[kW]	-	-	48.1	48.1	48.1	48.1	48.1	40.5	35.2	29.2	23.0	20.0	17.3	14.4	11.7	-	
	T_{OUT}[N•m]	-	-	4120	4870	5620	6370	7870	7880	7960	7960	7690	7960	7960	7960	7960	-	CHH C-72
	T_{OUT}[kgf•m]	-	-	420	496	573	649	802	803	811	811	784	811	811	811	811	-	CHF C-77
	Pro[N]	-	-	28500	29500	30800	32400	34900	36700	38700	41100	44500	46500	49000	52100	56300	-	CVV C-84
	Pro[kgf]	-	-	2910	3010	3140	3300	3560	3740	3940	4190	4540	4740	4990	5310	5740	-	
Frame Size	Ratio[Z]	6	8	11	13	15	17	21	25	29	35	43	51	59	71	87	119	Page of Dim.
	n_2 [r/min]	194	146	106	89.6	77.7	68.5	55.5	46.6	40.2	33.3	27.1	22.8	19.7	16.4	13.4	9.79	

Note: 1. Allowable radial load Pro is the value at the midpoint of the output shaft. Refer to pages F-11~12 when radial load is off the midpoint of output shaft and for checking thrust load.
2. Refer to pages F-15~16 for allowable radial load for input shaft.

Selection Tables 6000 Series Reducer

Single Reduction Ratio 6 ~ 119 Frame Size: 6205 ~ 6275

Input Speed	n_1 = 1165 r/min	n_1: Input Speed [r/min]	T_{out}: Allowable output torque [N·m, kgf·m]
		n_2: Output Speed [r/min]	Pro: Allowable output shaft radial load [N, kgf]
		P_1: Allowable input power [kW]	*Consult us for Pro of CNF and CHF type.

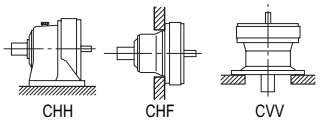

Frame Size	n_2 [r/min]	194	146	106	89.6	77.7	68.5	55.5	46.6	40.2	33.3	27.1	22.8	19.7	16.4	13.4	9.79	Page of Dim.
	Ratio[Z]	6	8	11	13	15	17	21	25	29	35	43	51	59	71	87	119	
6205	P_1[kW]	-	-	59.7	-	59.7	-	54.7	-	39.6	-	27.8	-	19.5	-	12.9	-	
	T_{OUT}[N•m]	-	-	5110	-	6970	-	8950	-	8950	-	9300	-	8950	-	8760	-	CHH C-72
	T_{OUT}[kgf•m]	-	-	521	-	710	-	912	-	912	-	948	-	912	-	893	-	CHF C-77
	Pro[N]	-	-	55000	-	58900	-	65800	-	72100	-	81600	-	84100	-	84100	-	CVV C-84
	Pro[kgf]	-	-	5610	-	6000	-	6710	-	7350	-	8320	-	8570	-	8570	-	
6215	P_1[kW]	-	-	75.3	-	75.3	-	75.3	-	56.0	-	37.8	-	27.5	-	16.6	-	
	T_{OUT}[N•m]	-	-	6450	-	8800	-	12300	-	12700	-	12700	-	12700	-	11300	-	CHH C-72
	T_{OUT}[kgf•m]	-	-	657	-	897	-	1250	-	1290	-	1290	-	1290	-	1150	-	CHF C-77
	Pro[N]	-	-	55300	-	59200	-	66400	-	72600	-	82500	-	90100	-	102000	-	CVV C-84
	Pro[kgf]	-	-	5640	-	6030	-	6770	-	7400	-	8410	-	9180	-	10400	-	
6225	P_1[kW]	-	-	99.5	-	99.5	-	90.5	-	66.6	-	47.8	-	33.3	-	22.2	-	
	T_{OUT}[N•m]	-	-	8520	-	11600	-	14800	-	15000	-	16000	-	15300	-	15100	-	CHH C-72
	T_{OUT}[kgf•m]	-	-	869	-	1180	-	1510	-	1530	-	1630	-	1560	-	1540	-	CHF C-77
	Pro[N]	-	-	58200	-	62600	-	69800	-	76500	-	86800	-	95000	-	107000	-	CVV C-84
	Pro[kgf]	-	-	5930	-	6380	-	7120	-	7800	-	8850	-	9680	-	10900	-	
6235	P_1[kW]	-	-	113	-	113	-	97.5	-	75.3	-	54.3	-	37.7	-	24.0	-	
	T_{OUT}[N•m]	-	-	9680	-	13200	-	15900	-	17000	-	18200	-	17300	-	16200	-	CHH C-72
	T_{OUT}[kgf•m]	-	-	987	-	1350	-	1620	-	1730	-	1860	-	1760	-	1650	-	CHF C-77
	Pro[N]	-	-	73100	-	77900	-	87700	-	96000	-	108000	-	119000	-	134000	-	CVV C-84
	Pro[kgf]	-	-	7450	-	7940	-	8940	-	9790	-	11000	-	12100	-	13700	-	
6245	P_1[kW]	-	-	132	-	132	-	120	-	94.2	-	75.3	-	56.2	-	32.1	-	
	T_{OUT}[N•m]	-	-	11300	-	15400	-	19600	-	21300	-	25200	-	25800	-	21700	-	CHH C-72
	T_{OUT}[kgf•m]	-	-	1150	-	1570	-	2000	-	2170	-	2570	-	2630	-	2210	-	CHF C-77
	Pro[N]	-	-	81200	-	86900	-	97100	-	107000	-	120000	-	131000	-	149000	-	CVV C-84
	Pro[kgf]	-	-	8280	-	8860	-	9900	-	10900	-	12200	-	13400	-	15200	-	
6255	P_1[kW]	-	-	151	-	151	-	151	-	118	-	88.9	-	64.8	-	42.9	-	
	T_{OUT}[N•m]	-	-	12900	-	17600	-	24600	-	26700	-	29800	-	29800	-	29000	-	CHH C-72
	T_{OUT}[kgf•m]	-	-	1310	-	1790	-	2510	-	2720	-	3040	-	3040	-	2960	-	CHF C-77
	Pro[N]	-	-	99600	-	107000	-	118000	-	131000	-	147000	-	161000	-	182000	-	CVV C-84
	Pro[kgf]	-	-	10200	-	10900	-	12000	-	13400	-	15000	-	16400	-	18600	-	
6265	P_1[kW]	-	-	175	-	175	-	172	-	159	-	113	-	94.2	-	53.4	-	
	T_{OUT}[N•m]	-	-	15000	-	20400	-	28100	-	35900	-	37800	-	43300	-	36200	-	CHH C-72
	T_{OUT}[kgf•m]	-	-	1530	-	2080	-	2860	-	3660	-	3850	-	4410	-	3690	-	CHF C-77
	Pro[N]	-	-	122000	-	130000	-	145000	-	160000	-	180000	-	197000	-	222000	-	CVV C-84
	Pro[kgf]	-	-	12400	-	13300	-	14800	-	16300	-	18300	-	20100	-	22600	-	
6275	P_1[kW]	-	-	-	-	-	-	-	-	159	-	151	-	132	-	53.4	-	
	T_{OUT}[N•m]	-	-	-	-	-	-	-	-	35900	-	50500	-	60600	-	36200	-	CHH C-72
	T_{OUT}[kgf•m]	-	-	-	-	-	-	-	-	3660	-	5150	-	6180	-	3690	-	
	Pro[N]	-	-	-	-	-	-	-	-	186000	-	248000	-	247000	-	208000	-	CVV C-84
	Pro[kgf]	-	-	-	-	-	-	-	-	19000	-	25300	-	25200	-	21200	-	
Frame Size	Ratio[Z]	6	8	11	13	15	17	21	25	29	35	43	51	59	71	87	119	Page of Dim.
	n_2 [r/min]	194	146	106	89.6	77.7	68.5	55.5	46.6	40.2	33.3	27.1	22.8	19.7	16.4	13.4	9.79	

Note: 1. Allowable radial load Pro is the value at the midpoint of the output shaft. Refer to pages F-11~12 when radial load is off the midpoint of output shaft and for checking thrust load.
2. Refer to pages F-15~16 for allowable radial load for input shaft.

MEMO

Selection Tables 6000 Series Reducer

Single Reduction Ratio 6 ~ 119 Frame Size: 6060 ~ 6120

Input Speed	n_1 = 1450 r/min	n_1: Input Speed [r/min]	T_{out}: Allowable output torque [N·m, kgf·m]
		n_2: Output Speed [r/min]	Pro: Allowable output shaft radial load [N, kgf]
		P_1: Allowable input power [kW]	*Consult us for Pro of CNF and CHF type.

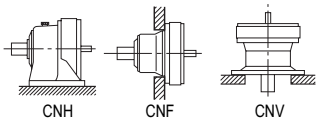

Frame Size	n_2 [r/min]	242	181	132	112	96.7	85.3	69.0	58.0	50.0	41.4	33.7	28.4	24.6	20.4	16.7	12.2	Page of Dim.
	Ratio[Z]	6	8	11	13	15	17	21	25	29	35	43	51	59	71	87	119	
6060	P_1[kW]	0.200	0.200	0.200	0.200	0.200	0.200	0.183	0.110	0.110	0.110	0.089	-	-	-	-	-	CNH C-71
	T_{OUT}[N•m]	7.51	10.0	13.8	16.3	18.8	21.3	24.0	17.2	20.0	24.0	24.0	-	-	-	-	-	CNF C-76
	T_{OUT}[kgf•m]	0.766	1.02	1.41	1.66	1.92	2.17	2.45	1.75	2.04	2.45	2.45	-	-	-	-	-	CNV C-82
	Pro[N]	798	912	1180	1180	1180	1180	1180	1180	1180	1180	1180	-	-	-	-	-	
	Pro[kgf]	81.3	93	120	120	120	120	120	120	120	120	120	-	-	-	-	-	
6065	P_1[kW]	0.286	0.286	0.286	0.286	0.286	0.282	0.228	0.166	0.165	0.137	0.112	-	-	-	-	-	CNH C-71
	T_{OUT}[N•m]	10.7	14.3	19.7	23.3	26.9	30.0	30.0	25.9	30.0	30.0	30.0	-	-	-	-	-	CNF C-76
	T_{OUT}[kgf•m]	1.09	1.46	2.01	2.38	2.74	3.06	3.06	2.64	3.06	3.06	3.06	-	-	-	-	-	CNV C-82
	Pro[N]	793	904	1180	1180	1180	1180	1180	1180	1180	1180	1180	-	-	-	-	-	
	Pro[kgf]	80.8	92.2	120	120	120	120	120	120	120	120	120	-	-	-	-	-	
6070	P_1[kW]	0.347	0.347	0.347	0.347	0.347	0.347	0.320	0.230	0.226	0.205	0.167	0.100	0.100	-	-	-	CNH C-71
	T_{OUT}[N•m]	13.0	17.3	23.9	28.2	32.5	36.9	42.1	35.9	41.0	45.0	45.0	31.9	36.9	-	-	-	CNF C-76
	T_{OUT}[kgf•m]	1.33	1.76	2.44	2.87	3.31	3.76	4.29	3.66	4.18	4.59	4.59	3.25	3.76	-	-	-	CNV C-82
	Pro[N]	1380	1520	1690	1770	1770	1770	1770	1770	1770	1770	1770	1770	1770	-	-	-	
	Pro[kgf]	141	155	172	180	180	180	180	180	180	180	180	180	180	-	-	-	
6075	P_1[kW]	0.407	0.407	0.407	0.407	0.407	0.407	0.407	0.294	0.286	0.272	0.223	0.143	0.136	-	-	-	CNH C-71
	T_{OUT}[N•m]	15.3	20.4	28.0	33.1	38.2	43.3	53.5	46.0	52.0	59.6	60.0	45.7	50.1	-	-	-	CNF C-76
	T_{OUT}[kgf•m]	1.56	2.08	2.85	3.37	3.89	4.41	5.45	4.69	5.30	6.08	6.12	4.66	5.11	-	-	-	CNV C-82
	Pro[N]	1370	1510	1680	1770	1770	1770	1770	1770	1770	1770	1660	1750	1700	-	-	-	
	Pro[kgf]	140	154	171	180	180	180	180	180	180	180	169	178	173	-	-	-	
6080	P_1[kW]	0.592	0.592	0.592	0.592	0.592	0.592	0.478	0.340	0.340	0.290	0.250	0.192	0.185	0.120	0.090	-	CNH C-71
	T_{OUT}[N•m]	22.2	29.6	40.8	48.2	55.6	63.0	62.9	53.2	61.7	74.5	67.3	61.3	68.1	53.3	49.0	-	CNF C-76
	T_{OUT}[kgf•m]	2.26	3.02	4.16	4.91	5.67	6.42	6.41	5.42	6.29	7.59	6.86	6.25	6.94	5.43	4.99	-	CNV C-82
	Pro[N]	1910	2060	2270	2440	2510	2560	2560	2560	2560	2560	2560	2560	2560	2560	2560	-	
	Pro[kgf]	195	210	231	249	256	261	261	261	261	261	261	261	261	261	261	-	
6085	P_1[kW]	0.778	0.778	0.778	0.778	0.778	0.778	0.550	0.475	0.467	0.327	0.294	0.241	0.234	0.165	0.121	-	CNH C-71
	T_{OUT}[N•m]	29.2	38.9	53.5	63.3	73.0	82.7	72.3	74.3	84.8	90.2	79.1	76.9	86.2	89.7	66.0	-	CNF C-76
	T_{OUT}[kgf•m]	2.98	3.97	5.45	6.45	7.44	8.43	7.37	7.57	8.64	9.19	8.06	7.84	8.79	9.14	6.73	-	CNV C-82
	Pro[N]	1900	2050	2250	2410	2480	2560	2560	2560	2460	2530	2550	2510	2450	2370	2560	-	
	Pro[kgf]	194	209	229	246	253	261	261	261	251	258	260	256	250	242	261	-	
6090	P_1[kW]	1.15	1.15	1.15	1.15	1.15	1.15	0.758	0.671	0.625	0.612	0.435	0.332	0.309	0.252	0.211	0.125	CNH C-71
	T_{OUT}[N•m]	43.0	57.4	78.9	93.2	108	122	99.5	105	113	134	117	106	114	112	115	93.1	CNF C-76
	T_{OUT}[kgf•m]	4.38	5.85	8.04	9.50	11.0	12.4	10.1	10.7	11.5	13.7	11.9	10.8	11.6	11.4	11.7	9.49	CNV C-82
	Pro[N]	2810	3120	3340	3340	3340	3340	3340	3340	3340	3330	3340	3340	3340	3340	3340	3340	
	Pro[kgf]	286	318	340	340	340	340	340	340	340	339	340	340	340	340	340	340	
6095	P_1[kW]	1.52	1.52	1.52	1.52	1.52	1.52	1.51	0.866	0.784	0.758	0.603	0.407	0.336	0.278	0.263	0.145	CNH C-71
	T_{OUT}[N•m]	56.9	75.8	104	123	142	161	198	136	142	166	162	130	124	124	143	108	CNF C-76
	T_{OUT}[kgf•m]	5.80	7.73	10.6	12.5	14.5	16.4	20.2	13.9	14.5	16.9	16.5	13.3	12.6	12.6	14.6	11.0	CNV C-82
	Pro[N]	2780	3080	3340	3340	3340	3340	3340	3310	3310	3270	3290	3320	3340	3330	3330	3310	
	Pro[kgf]	283	314	340	340	340	340	340	337	337	333	335	338	340	339	339	337	
6100	P_1[kW]	2.35	2.35	2.35	2.35	2.35	1.99	1.90	1.27	1.21	0.975	0.780	0.560	0.516	0.436	0.433	0.210	CNH C-71
	T_{OUT}[N•m]	88.1	117	162	191	220	211	250	199	220	214	210	179	190	194	236	156	CNF C-76
	T_{OUT}[kgf•m]	8.98	11.9	16.5	19.5	22.4	21.5	25.5	20.3	22.4	21.8	21.4	18.2	19.4	19.8	24.1	15.9	CNV C-82
	Pro[N]	4090	4550	5150	5350	5400	5400	5400	5400	5400	5400	5400	5400	5400	5400	5400	5400	
	Pro[kgf]	417	464	525	545	550	550	550	550	550	550	550	550	550	550	550	550	
6105	P_1[kW]	3.18	3.18	3.18	3.18	3.18	2.46	2.28	1.67	1.59	1.20	1.08	0.776	0.681	0.506	0.503	0.286	CNH C-71
	T_{OUT}[N•m]	119	159	219	259	298	261	300	262	288	262	292	248	251	225	274	213	CNF C-76
	T_{OUT}[kgf•m]	12.1	16.2	22.3	26.4	30.4	26.6	30.6	26.7	29.4	26.7	29.8	25.3	25.6	22.9	27.9	21.7	CNV C-82
	Pro[N]	4050	4490	5080	5270	5400	5400	5400	5400	5400	5400	5400	5400	5400	5400	5400	5380	
	Pro[kgf]	413	458	518	537	550	550	550	550	550	550	550	550	550	550	550	548	
6110	P_1[kW]	3.55	3.55	3.55	3.55	3.55	3.18	2.72	1.91	1.90	1.50	1.30	0.944	0.859	0.669	0.661	-	CNH C-71
	T_{OUT}[N•m]	133	178	244	289	333	338	358	299	346	329	350	301	317	297	360	-	CNF C-76
	T_{OUT}[kgf•m]	13.6	18.1	24.9	29.5	33.9	34.5	36.5	30.5	35.3	33.5	35.7	30.7	32.3	30.3	36.7	-	CNV C-82
	Pro[N]	4590	5100	5790	5970	6350	6440	6850	7060	7210	7310	7600	7610	7610	7610	7600	-	
	Pro[kgf]	468	520	590	609	647	656	698	720	735	745	775	776	776	776	775	-	
6115	P_1[kW]	3.92	3.92	3.92	3.90	3.90	3.90	3.11	2.22	2.22	1.81	1.52	1.11	1.01	0.758	0.758	-	CNH C-71
	T_{OUT}[N•m]	147	196	270	317	366	415	409	348	403	396	408	355	373	337	412	-	CNF C-76
	T_{OUT}[kgf•m]	15.0	20.0	27.5	32.3	37.3	42.3	41.7	35.5	41.1	40.4	41.6	36.2	38.0	34.4	42.0	-	CNV C-82
	Pro[N]	4570	5070	5760	5940	6310	6360	6790	7010	7160	7240	7540	7600	7610	7600	7550	-	
	Pro[kgf]	466	517	587	606	643	648	692	715	730	738	769	775	776	775	770	-	
6120	P_1[kW]	5.07	5.07	5.07	5.07	5.07	4.89	3.96	3.09	2.87	2.37	1.91	1.63	1.30	0.957	0.944	-	CNH C-71
	T_{OUT}[N•m]	190	254	349	412	476	520	520	483	520	520	515	520	482	425	514	-	CNF C-76
	T_{OUT}[kgf•m]	19.4	25.9	35.6	42.0	48.5	53.0	53.0	49.2	53.0	53.0	52.5	53.0	49.1	43.3	52.4	-	CNV C-82
	Pro[N]	5160	5740	6480	6670	7140	7210	7980	8440	8780	9320	9810	9810	9810	9810	9800	-	
	Pro[kgf]	526	585	661	680	728	735	813	860	895	950	1000	1000	1000	1000	999	-	
Frame Size	Ratio[Z]	6	8	11	13	15	17	21	25	29	35	43	51	59	71	87	119	Page of Dim.
	n_2 [r/min]	242	181	132	112	96.7	85.3	69.0	58.0	50.0	41.4	33.7	28.4	24.6	20.4	16.7	12.2	

Note: 1. Allowable radial load Pro is the value at the midpoint of the output shaft. Refer to pages F-11~12 when radial load is off the midpoint of output shaft and for checking thrust load.
2. Refer to pages F-15~16 for allowable radial load for input shaft.

Selection Tables 6000 Series Reducer

Single Reduction Ratio 6 ~ 119 Frame Size: 6125 ~ 6195

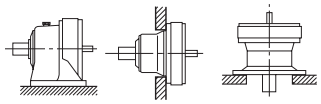

n_1: Input Speed [r/min]
n_2: Output Speed [r/min]
P_1: Allowable input power [kW]
T_{out}: Allowable output torque [N·m, kgf·m]
Pro: Allowable output shaft radial load [N, kgf]
*Consult us for Pro of CNF and CHF type.

Input Speed n_1 = 1450 r/min

Frame Size	n_2 [r/min]	242	181	132	112	96.7	85.3	69.0	58.0	50.0	41.4	33.7	28.4	24.6	20.4	16.7	12.2	Page of Dim.
	Ratio[Z]	6	8	11	13	15	17	21	25	29	35	43	51	59	71	87	119	
6125	P_1[kW]	6.96	6.95	5.92	5.92	5.92	5.66	4.79	3.96	3.47	2.88	2.34	1.97	1.62	1.14	1.03	-	
	T_{OUT}[N•m]	261	348	407	482	556	602	630	619	630	630	630	630	598	506	559	-	CNH C-71
	T_{OUT}[kgf•m]	26.6	35.5	41.5	49.1	56.7	61.4	64.2	63.1	64.2	64.2	64.2	64.2	61.0	51.6	57.0	-	CNF C-76
	Pro[N]	5080	5640	6420	6600	7060	7130	7870	8310	8680	9220	9810	9810	9810	9810	9710	-	CNV C-82
	Pro[kgf]	518	575	654	673	720	727	802	847	885	940	1000	1000	1000	1000	990	-	
6130	P_1[kW]	9.39	9.39	9.39	9.39	7.78	7.27	5.94	4.99	4.30	3.56	2.90	2.44	2.11	1.76	1.42	-	
	T_{OUT}[N•m]	353	470	646	764	731	774	780	780	780	780	780	780	780	780	772	-	CHH C-72
	T_{OUT}[kgf•m]	36.0	47.9	65.9	77.9	74.5	78.9	79.5	79.5	79.5	79.5	79.5	79.5	79.5	79.5	78.7	-	CHF C-77
	Pro[N]	5910	6560	7460	7740	7980	8570	9220	9640	10200	10800	11600	12200	12800	13600	14700	-	CVV C-83
	Pro[kgf]	602	669	760	789	813	874	940	983	1040	1100	1180	1240	1300	1390	1500	-	
6135	P_1[kW]	11.3	11.3	11.3	10.2	8.97	8.29	6.72	5.75	4.88	4.11	3.35	2.55	2.44	2.03	1.65	-	
	T_{OUT}[N•m]	424	566	778	832	842	882	883	900	886	900	900	813	900	900	900	-	CHH C-72
	T_{OUT}[kgf•m]	43.2	57.7	79.3	84.8	85.8	89.9	90.0	91.7	90.3	91.7	91.7	82.9	91.7	91.7	91.7	-	CHF C-77
	Pro[N]	5830	6470	7340	7680	7890	8490	9140	9550	10100	10700	11500	12100	12700	13600	14700	-	CVV C-83
	Pro[kgf]	594	660	748	783	804	865	932	973	1030	1090	1170	1230	1290	1390	1500	-	
6140	P_1[kW]	13.0	13.0	13.0	13.0	12.0	10.1	8.66	6.89	5.95	5.21	3.94	3.43	2.96	2.43	1.98	-	
	T_{OUT}[N•m]	489	652	896	1060	1130	1070	1140	1080	1080	1140	1060	1090	1090	1080	1080	-	CHH C-72
	T_{OUT}[kgf•m]	49.8	66.5	91.3	108	115	109	116	110	110	116	108	111	111	110	110	-	CHF C-77
	Pro[N]	9230	10200	11400	11700	12200	12800	13700	14500	14800	15900	16000	16000	16000	16000	16000	-	CVV C-83
	Pro[kgf]	941	1040	1160	1190	1240	1300	1400	1480	1510	1620	1630	1630	1630	1630	1630	-	
6145	P_1[kW]	15.1	15.1	15.1	15.1	14.5	12.0	9.49	7.91	7.53	6.26	4.67	3.70	3.18	2.62	2.16	-	
	T_{OUT}[N•m]	569	758	1040	1230	1360	1280	1250	1240	1370	1370	1260	1180	1170	1160	1170	-	CHH C-72
	T_{OUT}[kgf•m]	58.0	77.3	106	125	139	130	127	126	140	140	128	120	119	118	119	-	CHF C-77
	Pro[N]	9200	10200	11400	11600	12100	12800	13700	14400	14700	15800	16000	16000	16000	16000	16000	-	CVV C-83
	Pro[kgf]	938	1040	1160	1180	1230	1300	1400	1470	1500	1610	1630	1630	1630	1630	1630	-	
6160	P_1[kW]	20.3	19.7	19.7	19.7	18.7	13.1	12.9	9.86	9.56	8.01	6.45	5.50	4.42	3.47	3.22	-	
	T_{OUT}[N•m]	762	986	1360	1600	1760	1390	1700	1540	1740	1760	1740	1760	1630	1540	1760	-	CHH C-72
	T_{OUT}[kgf•m]	77.7	101	139	163	179	142	173	157	177	179	177	179	166	157	179	-	CHF C-77
	Pro[N]	10100	11300	12700	13200	14000	14800	15800	16700	17300	18500	19900	20800	22100	22100	22100	-	CVV C-84
	Pro[kgf]	1030	1150	1290	1350	1430	1510	1610	1700	1760	1890	2030	2120	2250	2250	2250	-	
6165	P_1[kW]	24.1	24.1	24.1	22.6	22.4	18.8	16.0	13.4	11.4	9.59	7.81	6.58	5.69	4.73	3.77	-	
	T_{OUT}[N•m]	903	1200	1660	1840	2100	2000	2100	2100	2070	2100	2100	2100	2100	2100	2050	-	CHH C-72
	T_{OUT}[kgf•m]	92.0	122	169	188	214	204	214	214	211	214	214	214	214	214	209	-	CHF C-77
	Pro[N]	9990	11100	12500	13100	13800	14300	15500	16300	17100	18300	19600	20600	22100	22100	21800	-	CVV C-84
	Pro[kgf]	1020	1130	1270	1340	1410	1460	1580	1660	1740	1870	2000	2100	2250	2250	2220	-	
6170	P_1[kW]	27.6	27.6	27.6	27.3	25.5	19.7	18.6	15.6	13.5	11.2	9.08	7.66	6.62	5.50	4.57	-	
	T_{OUT}[N•m]	1040	1380	1900	2220	2390	2090	2440	2440	2440	2440	2440	2440	2440	2450	2490	-	CHH C-72
	T_{OUT}[kgf•m]	106	141	194	226	244	213	249	249	249	249	249	249	249	250	254	-	CHF C-77
	Pro[N]	11300	12500	14200	14700	15400	16400	17700	18500	19500	20800	22300	23400	24600	26200	28100	-	CVV C-84
	Pro[kgf]	1150	1270	1450	1500	1570	1670	1800	1890	1990	2120	2270	2390	2510	2670	2860	-	
6175	P_1[kW]	30.1	30.1	30.1	30.1	30.1	24.1	23.6	19.5	17.4	14.4	11.3	9.87	8.29	6.98	5.62	-	
	T_{OUT}[N•m]	1130	1510	2070	2450	2820	2560	3100	3050	3150	3150	3040	3150	3060	3100	3060	-	CHH C-72
	T_{OUT}[kgf•m]	115	154	211	250	287	261	316	311	321	321	310	321	312	316	312	-	CHF C-77
	Pro[N]	11300	12400	14100	14600	15100	16100	17300	18100	19200	20500	22000	23000	24300	25800	27800	-	CVV C-84
	Pro[kgf]	1150	1260	1440	1490	1540	1640	1760	1850	1960	2090	2240	2340	2480	2630	2830	-	
6180	P_1[kW]	-	-	35.2	35.2	32.4	30.6	30.0	24.1	19.5	18.5	15.1	12.0	9.75	8.80	7.15	-	
	T_{OUT}[N•m]	-	-	2420	2860	3040	3250	3940	3760	3540	4050	4050	3830	3600	3910	3890	-	CHH C-72
	T_{OUT}[kgf•m]	-	-	247	292	310	331	402	383	361	413	413	390	367	399	397	-	CHF C-77
	Pro[N]	-	-	19100	19800	20800	22000	23600	24700	26100	27800	29900	31200	32800	34900	37700	-	CVV C-84
	Pro[kgf]	-	-	1950	2020	2120	2240	2410	2520	2660	2830	3050	3180	3340	3560	3840	-	
6185	P_1[kW]	-	-	39.0	39.0	39.0	38.2	38.1	30.1	24.1	22.6	18.6	15.1	12.0	9.79	8.59	-	
	T_{OUT}[N•m]	-	-	2680	3170	3660	4060	5000	4710	4360	4950	5000	4810	4430	4350	4680	-	CHH C-72
	T_{OUT}[kgf•m]	-	-	273	323	373	414	510	480	444	505	510	490	452	443	477	-	CHF C-77
	Pro[N]	-	-	19000	19600	20500	21600	23200	24400	25800	27500	29500	30900	32500	34800	37400	-	CVV C-84
	Pro[kgf]	-	-	1940	2000	2090	2200	2360	2490	2630	2800	3010	3150	3310	3550	3810	-	
6190	P_1[kW]	-	-	41.0	41.0	41.0	41.0	41.0	35.2	30.7	24.3	20.9	18.2	15.3	13.5	11.7	-	
	T_{OUT}[N•m]	-	-	2820	3330	3850	4360	5390	5500	5570	5320	5640	5800	5640	6000	6380	-	CHH C-72
	T_{OUT}[kgf•m]	-	-	287	339	392	444	549	561	568	542	575	591	575	612	650	-	CHF C-77
	Pro[N]	-	-	26900	27800	29200	30700	33000	34700	36500	38800	41800	43700	46000	48800	52600	-	CVV C-84
	Pro[kgf]	-	-	2740	2830	2980	3130	3360	3540	3720	3960	4260	4450	4690	4970	5360	-	
6195	P_1[kW]	-	-	48.1	48.1	48.1	48.1	48.1	40.5	37.8	30.1	27.1	20.9	18.8	15.6	13.6	-	
	T_{OUT}[N•m]	-	-	3310	3910	4510	5120	6320	6330	6860	6600	7300	6680	6950	6930	7420	-	CHH C-72
	T_{OUT}[kgf•m]	-	-	337	399	460	522	644	645	699	673	744	681	708	706	756	-	CHF C-77
	Pro[N]	-	-	26700	27600	28900	30500	32700	34400	36200	38400	41400	43500	45700	48500	52300	-	CVV C-84
	Pro[kgf]	-	-	2720	2810	2950	3110	3330	3510	3690	3910	4220	4430	4660	4940	5330	-	
Frame Size	Ratio[Z]	6	8	11	13	15	17	21	25	29	35	43	51	59	71	87	119	Page of Dim.
	n_2 [r/min]	242	181	132	112	96.7	85.3	69.0	58.0	50.0	41.4	33.7	28.4	24.6	20.4	16.7	12.2	

Note: 1. Allowable radial load Pro is the value at the midpoint of the output shaft. Refer to pages F-11~12 when radial load is off the midpoint of output shaft and for checking thrust load.
2. Refer to pages F-15~16 for allowable radial load for input shaft.

Selection Tables 6000 Series Reducer

Single Reduction Ratio 6 ~ 119 Frame Size: 6205 ~ 6275

Input Speed	n_1 = 1450 r/min	n_1: Input Speed [r/min]	T_{out}: Allowable output torque [N·m, kgf·m]
		n_2: Output Speed [r/min]	Pro: Allowable output shaft radial load [N, kgf]
		P_1: Allowable input power [kW]	*Consult us for Pro of CNF and CHF type.

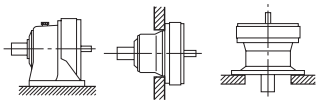

Frame Size	n_2 [r/min]	242	181	132	112	96.7	85.3	69.0	58.0	50.0	41.4	33.7	28.4	24.6	20.4	16.7	12.2	Page of Dim.
	Ratio[Z]	6	8	11	13	15	17	21	25	29	35	43	51	59	71	87	119	
6205	P_1[kW]	-	-	59.7	-	59.7	-	59.2	-	45.7	-	31.8	-	22.6	-	15.9	-	
	T_{OUT}[N•m]	-	-	4110	-	5600	-	7780	-	8280	-	8550	-	8340	-	8650	-	CHH C-72
	T_{OUT}[kgf•m]	-	-	419	-	571	-	793	-	844	-	872	-	850	-	882	-	CHF C-77
	Pro[N]	-	-	51700	-	55400	-	61800	-	67500	-	76500	-	83500	-	84100	-	CVV C-84
	Pro[kgf]	-	-	5270	-	5650	-	6300	-	6880	-	7800	-	8510	-	8570	-	
6215	P_1[kW]	-	-	75.3	-	75.3	-	75.3	-	58.5	-	45.2	-	33.9	-	19.7	-	
	T_{OUT}[N•m]	-	-	5190	-	7070	-	9900	-	10600	-	12200	-	12500	-	10700	-	CHH C-72
	T_{OUT}[kgf•m]	-	-	529	-	721	-	1010	-	1080	-	1240	-	1270	-	1090	-	CHF C-77
	Pro[N]	-	-	52000	-	55700	-	62600	-	68300	-	77200	-	84200	-	95400	-	CVV C-84
	Pro[kgf]	-	-	5300	-	5680	-	6380	-	6960	-	7870	-	8580	-	9720	-	
6225	P_1[kW]	-	-	99.5	-	99.5	-	94.2	-	75.3	-	56.5	-	39.3	-	26.7	-	
	T_{OUT}[N•m]	-	-	6850	-	9330	-	12400	-	13700	-	15200	-	14500	-	14600	-	CHH C-72
	T_{OUT}[kgf•m]	-	-	698	-	951	-	1260	-	1400	-	1550	-	1480	-	1490	-	CHF C-77
	Pro[N]	-	-	54800	-	59000	-	65700	-	71800	-	81300	-	89000	-	100000	-	CVV C-84
	Pro[kgf]	-	-	5590	-	6010	-	6700	-	7320	-	8290	-	9070	-	10200	-	
6235	P_1[kW]	-	-	-	-	-	-	-	-	-	-	-	-	-	-	-	-	
	T_{OUT}[N•m]	-	-	-	-	-	-	-	-	-	-	-	-	-	-	-	-	CHH C-72
	T_{OUT}[kgf•m]	-	-	-	-	-	-	-	-	-	-	-	-	-	-	-	-	CHF C-77
	Pro[N]	-	-	-	-	-	-	-	-	-	-	-	-	-	-	-	-	CVV C-84
	Pro[kgf]	-	-	-	-	-	-	-	-	-	-	-	-	-	-	-	-	
6245	P_1[kW]	-	-	-	-	-	-	-	-	-	-	-	-	-	-	-	-	
	T_{OUT}[N•m]	-	-	-	-	-	-	-	-	-	-	-	-	-	-	-	-	CHH C-72
	T_{OUT}[kgf•m]	-	-	-	-	-	-	-	-	-	-	-	-	-	-	-	-	CHF C-77
	Pro[N]	-	-	-	-	-	-	-	-	-	-	-	-	-	-	-	-	CVV C-84
	Pro[kgf]	-	-	-	-	-	-	-	-	-	-	-	-	-	-	-	-	
6255	P_1[kW]	-	-	-	-	-	-	-	-	-	-	-	-	-	-	-	-	
	T_{OUT}[N•m]	-	-	-	-	-	-	-	-	-	-	-	-	-	-	-	-	CHH C-72
	T_{OUT}[kgf•m]	-	-	-	-	-	-	-	-	-	-	-	-	-	-	-	-	CHF C-77
	Pro[N]	-	-	-	-	-	-	-	-	-	-	-	-	-	-	-	-	CVV C-84
	Pro[kgf]	-	-	-	-	-	-	-	-	-	-	-	-	-	-	-	-	
6265	P_1[kW]	-	-	-	-	-	-	-	-	-	-	-	-	-	-	-	-	
	T_{OUT}[N•m]	-	-	-	-	-	-	-	-	-	-	-	-	-	-	-	-	CHH C-72
	T_{OUT}[kgf•m]	-	-	-	-	-	-	-	-	-	-	-	-	-	-	-	-	CHF C-77
	Pro[N]	-	-	-	-	-	-	-	-	-	-	-	-	-	-	-	-	CVV C-84
	Pro[kgf]	-	-	-	-	-	-	-	-	-	-	-	-	-	-	-	-	
6275	P_1[kW]	-	-	-	-	-	-	-	-	-	-	-	-	-	-	-	-	
	T_{OUT}[N•m]	-	-	-	-	-	-	-	-	-	-	-	-	-	-	-	-	CHH C-72
	T_{OUT}[kgf•m]	-	-	-	-	-	-	-	-	-	-	-	-	-	-	-	-	
	Pro[N]	-	-	-	-	-	-	-	-	-	-	-	-	-	-	-	-	CVV C-84
	Pro[kgf]	-	-	-	-	-	-	-	-	-	-	-	-	-	-	-	-	
Frame Size	Ratio[Z]	6	8	11	13	15	17	21	25	29	35	43	51	59	71	87	119	Page of Dim.
	n_2 [r/min]	242	181	132	112	96.7	85.3	69.0	58.0	50.0	41.4	33.7	28.4	24.6	20.4	16.7	12.2	

Note: 1. Allowable radial load Pro is the value at the midpoint of the output shaft. Refer to pages F-11~12 when radial load is off the midpoint of output shaft and for checking thrust load.
2. Refer to pages F-15~16 for allowable radial load for input shaft.

MEMO

Selection Tables 6000 Series Reducer

Single Reduction Ratio 6 ~ 119 Frame Size: 6060 ~ 6120

Input Speed	n_1 = 1750 r/min	n_1: Input Speed [r/min]	T_{out}: Allowable output torque [N·m, kgf·m]
		n_2: Output Speed [r/min]	Pro: Allowable output shaft radial load [N, kgf]
		P_1: Allowable input power [kW]	*Consult us for Pro of CNF and CHF type.

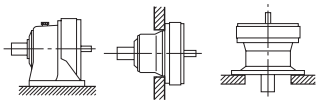

Frame Size	n_2 [r/min]	292	219	159	135	117	103	83.3	70.0	60.3	50.0	40.7	34.3	29.7	24.6	20.1	14.7	Page of Dim.
	Ratio[Z]	6	8	11	13	15	17	21	25	29	35	43	51	59	71	87	119	
6060	P_1[kW]	0.200	0.200	0.200	0.200	0.200	0.200	0.200	0.110	0.110	0.110	0.090	-	-	-	-	-	CNH C-71
	T_{OUT}[N•m]	6.22	8.29	11.4	13.5	15.6	17.6	21.8	14.3	16.5	20.0	20.1	-	-	-	-	-	CNF C-76
	T_{OUT}[kgf•m]	0.634	0.845	1.16	1.38	1.59	1.79	2.22	1.46	1.68	2.04	2.05	-	-	-	-	-	CNV C-82
	Pro[N]	751	859	1170	1180	1180	1180	1180	1180	1180	1180	1180	-	-	-	-	-	
	Pro[kgf]	76.6	88	119	120	120	120	120	120	120	120	120	-	-	-	-	-	
6065	P_1[kW]	0.286	0.286	0.286	0.286	0.286	0.286	0.234	0.166	0.166	0.143	0.113	-	-	-	-	-	CNH C-71
	T_{OUT}[N•m]	8.91	11.9	16.3	19.3	22.3	25.2	25.4	21.5	24.9	26.0	25.2	-	-	-	-	-	CNF C-76
	T_{OUT}[kgf•m]	0.908	1.21	1.66	1.97	2.27	2.57	2.59	2.19	2.54	2.65	2.57	-	-	-	-	-	CNV C-82
	Pro[N]	747	852	1150	1180	1180	1180	1180	1180	1180	1180	1180	-	-	-	-	-	
	Pro[kgf]	76.1	86.9	117	120	120	120	120	120	120	120	120	-	-	-	-	-	
6070	P_1[kW]	0.347	0.347	0.347	0.347	0.347	0.347	0.320	0.230	0.226	0.211	0.170	0.100	0.100	-	-	-	CNH C-71
	T_{OUT}[N•m]	10.8	14.4	19.8	23.4	27.0	30.5	34.9	29.8	34.0	38.3	37.8	26.4	30.6	-	-	-	CNF C-76
	T_{OUT}[kgf•m]	1.10	1.47	2.02	2.39	2.75	3.11	3.56	3.04	3.47	3.90	3.85	2.69	3.12	-	-	-	CNV C-82
	Pro[N]	1300	1430	1600	1690	1690	1770	1770	1770	1770	1770	1770	1770	1770	-	-	-	
	Pro[kgf]	133	146	163	172	172	180	180	180	180	180	180	180	180	-	-	-	
6075	P_1[kW]	0.407	0.407	0.407	0.407	0.407	0.407	0.407	0.294	0.286	0.279	0.226	0.143	0.136	-	-	-	CNH C-71
	T_{OUT}[N•m]	12.7	16.9	23.2	27.4	31.6	35.9	44.3	38.1	43.0	50.6	50.4	37.9	41.5	-	-	-	CNF C-76
	T_{OUT}[kgf•m]	1.29	1.72	2.36	2.79	3.22	3.66	4.52	3.88	4.38	5.16	5.14	3.86	4.23	-	-	-	CNV C-82
	Pro[N]	1290	1420	1590	1670	1680	1770	1770	1770	1770	1770	1770	1770	1770	-	-	-	
	Pro[kgf]	131	145	162	170	171	180	180	180	180	180	180	180	180	-	-	-	
6080	P_1[kW]	0.592	0.592	0.592	0.592	0.592	0.592	0.478	0.340	0.340	0.329	0.250	0.192	0.185	0.120	0.090	-	CNH C-71
	T_{OUT}[N•m]	18.4	24.6	33.8	39.9	46.1	52.2	52.1	44.1	51.1	61.7	55.7	50.8	56.5	44.2	40.6	-	CNF C-76
	T_{OUT}[kgf•m]	1.88	2.51	3.45	4.07	4.70	5.32	5.31	4.50	5.21	6.29	5.68	5.18	5.76	4.51	4.14	-	CNV C-82
	Pro[N]	1800	1940	2140	2300	2370	2480	2440	2530	2560	2560	2560	2560	2560	2560	2560	-	
	Pro[kgf]	183	198	218	234	242	253	249	258	261	261	261	261	261	261	261	-	
6085	P_1[kW]	0.778	0.778	0.778	0.778	0.778	0.778	0.550	0.475	0.467	0.371	0.294	0.241	0.234	0.187	0.121	-	CNH C-71
	T_{OUT}[N•m]	24.2	32.3	44.4	52.4	60.5	68.5	59.9	61.5	70.2	84.8	65.5	63.7	71.4	74.4	54.7	-	CNF C-76
	T_{OUT}[kgf•m]	2.47	3.29	4.53	5.34	6.17	6.98	6.11	6.27	7.16	8.64	6.68	6.49	7.28	7.58	5.58	-	CNV C-82
	Pro[N]	1790	1930	2120	2280	2350	2450	2430	2500	2550	2560	2560	2560	2560	2500	2560	-	
	Pro[kgf]	182	197	216	232	240	250	248	255	260	261	261	261	261	255	261	-	
6090	P_1[kW]	1.15	1.15	1.15	1.15	1.15	1.15	0.758	0.671	0.625	0.612	0.435	0.332	0.309	0.252	0.211	0.125	CNH C-71
	T_{OUT}[N•m]	35.7	47.5	65.4	77.3	89.1	101	82.5	86.9	94.0	111	97.0	87.7	94.5	92.6	95.3	77.1	CNF C-76
	T_{OUT}[kgf•m]	3.64	4.84	6.67	7.88	9.08	10.3	8.41	8.86	9.58	11.3	9.89	8.94	9.63	9.44	9.71	7.86	CNV C-82
	Pro[N]	2650	2950	3340	3340	3340	3340	3340	3340	3340	3340	3340	3340	3340	3340	3340	3340	
	Pro[kgf]	270	301	340	340	340	340	340	340	340	340	340	340	340	340	340	340	
6095	P_1[kW]	1.52	1.52	1.52	1.52	1.52	1.52	1.52	0.866	0.784	0.758	0.603	0.422	0.373	0.301	0.301	0.151	CNH C-71
	T_{OUT}[N•m]	47.1	62.8	86.4	102	118	134	165	112	118	137	134	112	114	111	136	93.0	CNF C-76
	T_{OUT}[kgf•m]	4.80	6.40	8.81	10.4	12.0	13.7	16.8	11.4	12.0	14.0	13.7	11.4	11.6	11.3	13.9	9.48	CNV C-82
	Pro[N]	2630	2910	3300	3300	3280	3290	3260	3340	3340	3320	3340	3340	3340	3340	3340	3340	
	Pro[kgf]	268	297	336	336	334	335	332	340	340	338	340	340	340	340	340	340	
6100	P_1[kW]	2.35	2.35	2.35	2.35	2.35	1.99	1.93	1.27	1.21	0.975	0.780	0.560	0.516	0.436	0.433	0.210	CNH C-71
	T_{OUT}[N•m]	73.0	97.4	134	158	183	175	210	165	182	177	174	148	158	160	195	130	CNF C-76
	T_{OUT}[kgf•m]	7.44	9.93	13.7	16.1	18.7	17.8	21.4	16.8	18.6	18.0	17.7	15.1	16.1	16.3	19.9	13.3	CNV C-82
	Pro[N]	3850	4290	4860	5050	5330	5400	5400	5400	5400	5400	5400	5400	5400	5400	5400	5400	
	Pro[kgf]	392	437	495	515	543	550	550	550	550	550	550	550	550	550	550	550	
6105	P_1[kW]	3.18	3.18	3.18	3.18	3.18	2.46	2.34	1.67	1.59	1.20	1.08	0.776	0.708	0.561	0.565	0.286	CNH C-71
	T_{OUT}[N•m]	98.9	132	181	214	247	216	254	217	239	217	242	205	217	207	255	177	CNF C-76
	T_{OUT}[kgf•m]	10.1	13.5	18.5	21.8	25.2	22.0	25.9	22.1	24.4	22.1	24.7	20.9	22.1	21.1	26.0	18.0	CNV C-82
	Pro[N]	3820	4240	4800	4980	5250	5380	5380	5380	5380	5380	5380	5380	5380	5400	5400	5400	
	Pro[kgf]	389	432	489	508	535	548	548	548	548	548	548	548	548	550	550	550	
6110	P_1[kW]	3.55	3.55	3.55	3.55	3.55	3.18	2.72	1.91	1.90	1.50	1.30	0.944	0.859	0.669	0.661	-	CNH C-71
	T_{OUT}[N•m]	110	147	202	239	276	280	297	248	286	273	290	249	263	246	298	-	CNF C-76
	T_{OUT}[kgf•m]	11.2	15.0	20.6	24.4	28.1	28.5	30.3	25.3	29.2	27.8	29.6	25.4	26.8	25.1	30.4	-	CNV C-82
	Pro[N]	4320	4810	5470	5650	6010	6090	6470	6660	6840	7360	7610	7610	7610	7610	7610	-	
	Pro[kgf]	440	490	558	576	613	621	660	679	697	750	776	776	776	776	776	-	
6115	P_1[kW]	3.92	3.92	3.92	3.90	3.90	3.90	3.11	2.22	2.22	1.81	1.52	1.11	1.01	0.758	0.758	-	CNH C-71
	T_{OUT}[N•m]	122	163	223	263	303	344	339	288	334	328	338	294	309	279	342	-	CNF C-76
	T_{OUT}[kgf•m]	12.4	16.6	22.7	26.8	30.9	35.1	34.6	29.4	34.0	33.4	34.5	30.0	31.5	28.4	34.9	-	CNV C-82
	Pro[N]	4310	4790	5450	5620	5970	6020	6430	6620	6800	7310	7610	7610	7610	7610	7610	-	
	Pro[kgf]	439	488	556	573	609	614	655	675	693	745	776	776	776	776	776	-	
6120	P_1[kW]	5.07	5.07	5.07	5.07	5.07	5.07	3.96	3.09	2.99	2.49	1.91	1.72	1.30	0.957	0.944	-	CNH C-71
	T_{OUT}[N•m]	158	210	289	342	394	447	431	400	450	453	427	454	399	352	426	-	CNF C-76
	T_{OUT}[kgf•m]	16.1	21.4	29.5	34.9	40.2	45.6	43.9	40.8	45.9	46.2	43.5	46.3	40.7	35.9	43.4	-	CNV C-82
	Pro[N]	4860	5410	6130	6310	6760	6810	7540	7970	8280	8790	9430	9810	9810	9810	9810	-	
	Pro[kgf]	495	551	625	643	689	694	769	812	844	896	961	1000	1000	1000	1000	-	
Frame Size	Ratio[Z]	6	8	11	13	15	17	21	25	29	35	43	51	59	71	87	119	Page of Dim.
	n_2 [r/min]	292	219	159	135	117	103	83.3	70.0	60.3	50.0	40.7	34.3	29.7	24.6	20.1	14.7	

Note: 1. Allowable radial load Pro is the value at the midpoint of the output shaft. Refer to pages F-11~12 when radial load is off the midpoint of output shaft and for checking thrust load.
2. Refer to pages F-15~16 for allowable radial load for input shaft.

Selection Tables 6000 Series Reducer

Single Reduction Ratio 6 ~ 119 Frame Size: 6125 ~ 6195

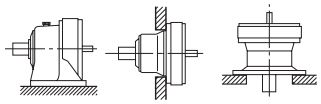

n_1: Input Speed [r/min]
n_2: Output Speed [r/min]
P_1: Allowable input power [kW]
T_{out}: Allowable output torque [N·m, kgf·m]
Pro: Allowable output shaft radial load [N, kgf]
*Consult us for Pro of CNF and CHF type.

Input Speed n_1 = 1750 r/min

Frame Size	n_2 [r/min]	292	219	159	135	117	103	83.3	70.0	60.3	50.0	40.7	34.3	29.7	24.6	20.1	14.7	Page of Dim.
	Ratio[Z]	6	8	11	13	15	17	21	25	29	35	43	51	59	71	87	119	
6125	P_1[kW]	5.81	6.95	5.92	5.92	5.92	5.66	4.88	3.96	3.77	3.18	2.38	2.28	1.62	1.20	1.13	-	
	T_{OUT}[N•m]	181	288	338	399	460	499	532	513	566	577	531	602	495	441	510	-	CNH C-71
	T_{OUT}[kgf•m]	18.5	29.4	34.5	40.7	46.9	50.9	54.2	52.3	57.7	58.8	54.1	61.4	50.5	45.0	52.0	-	CNF C-76
	Pro[N]	4840	5340	6080	6250	6700	6760	7450	7870	8170	8670	9340	9740	9790	9790	9810	-	CNV C-82
	Pro[kgf]	493	544	620	637	683	689	759	802	833	884	952	993	998	998	1000	-	
6130	P_1[kW]	9.39	9.39	9.39	9.39	7.78	7.27	6.14	5.16	4.48	3.71	2.99	2.54	2.19	1.83	1.42	-	
	T_{OUT}[N•m]	292	389	535	633	605	641	669	669	674	673	668	672	669	674	640	-	CHH C-72
	T_{OUT}[kgf•m]	29.8	39.7	54.5	64.5	61.7	65.3	68.2	68.2	68.7	68.6	68.1	68.5	68.2	68.7	65.2	-	CHF C-77
	Pro[N]	5590	6210	7060	7330	7550	8120	8710	9100	9610	10200	11000	11500	12100	12900	13900	-	CVV C-83
	Pro[kgf]	570	633	720	747	770	828	888	928	980	1040	1120	1170	1230	1310	1420	-	
6135	P_1[kW]	11.3	11.3	11.3	11.3	8.97	8.29	7.53	5.95	5.64	4.25	3.77	2.93	2.52	2.17	1.91	-	
	T_{OUT}[N•m]	352	469	645	762	697	730	820	771	848	771	840	775	772	799	861	-	CHH C-72
	T_{OUT}[kgf•m]	35.9	47.8	65.7	77.7	71.0	74.4	83.6	78.6	86.4	78.6	85.6	79.0	78.7	81.4	87.8	-	CHF C-77
	Pro[N]	5520	6140	6970	7230	7480	8050	8590	9030	9480	10100	10800	11400	12000	12800	13800	-	CVV C-83
	Pro[kgf]	563	626	710	737	762	821	876	920	966	1030	1100	1160	1220	1300	1410	-	
6140	P_1[kW]	13.0	13.0	13.0	13.0	12.0	10.1	8.66	6.89	5.95	5.21	3.94	3.43	2.96	2.43	1.98	-	
	T_{OUT}[N•m]	405	540	743	878	933	888	943	893	895	945	879	906	905	895	893	-	CHH C-72
	T_{OUT}[kgf•m]	41.3	55.0	75.7	89.5	95.1	90.5	96.1	91.0	91.2	96.3	89.6	92.4	92.3	91.2	91.0	-	CHF C-77
	Pro[N]	8750	9690	10900	11100	11600	12200	13000	13700	14000	15100	15800	16000	16000	16000	16000	-	CVV C-83
	Pro[kgf]	892	988	1110	1130	1180	1240	1330	1400	1430	1540	1610	1630	1630	1630	1630	-	
6145	P_1[kW]	15.1	15.1	15.1	15.1	15.1	12.0	11.0	7.91	7.53	7.53	5.39	4.22	3.65	3.03	2.48	-	
	T_{OUT}[N•m]	471	628	864	1020	1170	1060	1190	1030	1130	1370	1200	1120	1120	1110	1120	-	CHH C-72
	T_{OUT}[kgf•m]	48.0	64.0	88.1	104	119	108	121	105	115	140	122	114	114	113	114	-	CHF C-77
	Pro[N]	8720	9650	10800	11000	11500	12100	12900	13700	14000	14900	15600	16000	16000	16000	16000	-	CVV C-83
	Pro[kgf]	889	984	1100	1120	1170	1230	1310	1400	1430	1520	1590	1630	1630	1630	1630	-	
6160	P_1[kW]	20.3	19.7	19.7	19.7	18.7	13.1	12.9	9.86	10.5	9.67	7.45	5.75	4.42	3.47	3.47	-	
	T_{OUT}[N•m]	631	817	1120	1330	1460	1150	1400	1280	1580	1760	1660	1520	1350	1280	1570	-	CHH C-72
	T_{OUT}[kgf•m]	64.3	83.3	114	136	149	117	143	130	161	179	169	155	138	130	160	-	CHF C-77
	Pro[N]	9550	10700	12000	12500	13300	14000	14900	15800	16300	17300	18700	19600	21900	22000	21800	-	CVV C-84
	Pro[kgf]	973	1090	1220	1270	1360	1430	1520	1610	1660	1760	1910	2000	2230	2240	2220	-	
6165	P_1[kW]	24.1	24.1	24.1	22.6	22.6	18.8	16.1	15.1	11.4	11.4	7.91	7.53	5.75	5.65	3.90	-	
	T_{OUT}[N•m]	748	997	1370	1520	1760	1660	1750	1950	1720	2070	1760	1990	1760	2080	1760	-	CHH C-72
	T_{OUT}[kgf•m]	76.2	102	140	155	179	169	178	199	175	211	179	203	179	212	179	-	CHF C-77
	Pro[N]	9460	10500	11900	12400	13100	13600	14700	15300	16200	17100	18600	19300	21700	21500	21700	-	CVV C-84
	Pro[kgf]	964	1070	1210	1260	1340	1390	1500	1560	1650	1740	1900	1970	2210	2190	2210	-	
6170	P_1[kW]	27.6	27.6	27.6	27.3	25.5	19.7	19.5	15.8	14.3	12.0	9.75	8.39	7.15	5.92	4.81	-	
	T_{OUT}[N•m]	859	1140	1570	1840	1980	1730	2120	2050	2150	2180	2170	2220	2190	2180	2170	-	CHH C-72
	T_{OUT}[kgf•m]	87.6	116	160	188	202	176	216	209	219	222	221	226	223	222	221	-	CHF C-77
	Pro[N]	10700	11800	13500	14000	14600	15500	16700	17500	18400	19600	21000	22000	23200	24600	26500	-	CVV C-84
	Pro[kgf]	1090	1200	1380	1430	1490	1580	1700	1780	1880	2000	2140	2240	2360	2510	2700	-	
6175	P_1[kW]	30.1	30.1	30.1	30.1	30.1	24.1	24.1	19.5	18.8	15.1	11.3	11.3	8.29	7.15	5.62	-	
	T_{OUT}[N•m]	937	1250	1720	2030	2340	2120	2620	2530	2830	2730	2520	2990	2540	2630	2540	-	CHH C-72
	T_{OUT}[kgf•m]	95.5	127	175	207	239	216	267	258	288	278	257	305	259	268	259	-	CHF C-77
	Pro[N]	10700	11700	13400	13900	14400	15300	16400	17200	18100	19300	20900	21600	23000	24400	26300	-	CVV C-84
	Pro[kgf]	1090	1190	1370	1420	1470	1560	1670	1750	1850	1970	2130	2200	2340	2490	2680	-	
6180	P_1[kW]	-	-	35.2	35.2	32.4	30.6	30.0	24.1	19.5	18.8	15.1	12.0	9.75	8.80	7.15	-	
	T_{OUT}[N•m]	-	-	2010	2370	2520	2690	3270	3120	2930	3410	3360	3170	2980	3240	3220	-	CHH C-72
	T_{OUT}[kgf•m]	-	-	205	242	257	274	333	318	299	348	343	323	304	330	328	-	CHF C-77
	Pro[N]	-	-	18000	18700	19700	20800	22400	23400	24600	26300	28300	29500	31000	33000	35600	-	CVV C-84
	Pro[kgf]	-	-	1830	1910	2010	2120	2280	2390	2510	2680	2880	3010	3160	3360	3630	-	
6185	P_1[kW]	-	-	39.0	39.0	39.0	39.0	39.0	30.1	24.1	22.6	18.8	15.1	12.0	9.79	8.59	-	
	T_{OUT}[N•m]	-	-	2220	2630	3030	3440	4250	3910	3620	4100	4200	3980	3670	3610	3870	-	CHH C-72
	T_{OUT}[kgf•m]	-	-	226	268	309	351	433	399	369	418	428	406	374	368	394	-	CHF C-77
	Pro[N]	-	-	17900	18600	19500	20500	22000	23100	24400	26000	27900	29200	30700	32800	35400	-	CVV C-84
	Pro[kgf]	-	-	1820	1900	1990	2090	2240	2350	2490	2650	2840	2980	3130	3340	3610	-	
6190	P_1[kW]	-	-	41.0	41.0	41.0	41.0	41.0	35.2	30.7	24.3	20.9	18.2	15.3	13.5	11.8	-	
	T_{OUT}[N•m]	-	-	2340	2760	3190	3610	4460	4560	4620	4410	4670	4810	4670	4980	5320	-	CHH C-72
	T_{OUT}[kgf•m]	-	-	239	281	325	368	455	465	471	450	476	490	476	508	542	-	CHF C-77
	Pro[N]	-	-	25300	26300	27500	29000	31200	32800	34500	36600	39500	41300	43400	46000	49600	-	CVV C-84
	Pro[kgf]	-	-	2580	2680	2800	2960	3180	3340	3520	3730	4030	4210	4420	4690	5060	-	
6195	P_1[kW]	-	-	48.1	48.1	48.1	48.1	48.1	40.5	37.8	30.1	30.1	20.9	18.8	15.6	13.6	-	
	T_{OUT}[N•m]	-	-	2740	3240	3740	4240	5240	5240	5680	5470	6720	5540	5760	5740	6150	-	CHH C-72
	T_{OUT}[kgf•m]	-	-	279	330	381	432	534	534	579	558	685	565	587	585	627	-	CHF C-77
	Pro[N]	-	-	25200	26100	27300	28800	31000	32600	34200	36300	38900	41100	43100	45800	49400	-	CVV C-84
	Pro[kgf]	-	-	2570	2660	2780	2940	3160	3320	3490	3700	3970	4190	4390	4670	5040	-	
Frame Size	Ratio[Z]	6	8	11	13	15	17	21	25	29	35	43	51	59	71	87	119	Page of Dim.
	n_2 [r/min]	292	219	159	135	117	103	83.3	70.0	60.3	50.0	40.7	34.3	29.7	24.6	20.1	14.7	

Note: 1. Allowable radial load Pro is the value at the midpoint of the output shaft. Refer to pages F-11~12 when radial load is off the midpoint of output shaft and for checking thrust load.
2. Refer to pages F-15~16 for allowable radial load for input shaft.

Selection Tables 6000 Series Reducer

Single Reduction Ratio 6 ~ 119 Frame Size: 6205 ~ 6275

Input Speed	n_1 = 1750 r/min	n_1: Input Speed [r/min]	T_{out}: Allowable output torque [N·m, kgf·m]
		n_2: Output Speed [r/min]	Pro: Allowable output shaft radial load [N, kgf]
		P_1: Allowable input power [kW]	*Consult us for Pro of CNF and CHF type.

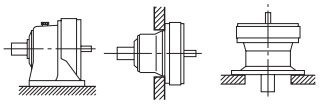

Frame Size	n_2 [r/min]	292	219	159	135	117	103	83.3	70.0	60.3	50.0	40.7	34.3	29.7	24.6	20.1	14.7	Page of Dim.
	Ratio[Z]	6	8	11	13	15	17	21	25	29	35	43	51	59	71	87	119	
6205	P_1[kW]	-	-	59.7	-	59.7	-	59.2	-	45.7	-	31.8	-	22.6	-	15.9	-	CHH C-72
	T_{OUT}[N•m]	-	-	3400	-	4640	-	6450	-	6860	-	7090	-	6910	-	7170	-	CHF C-77
	T_{OUT}[kgf•m]	-	-	347	-	473	-	657	-	699	-	723	-	704	-	731	-	CVV C-84
	Pro[N]	-	-	48900	-	52500	-	58600	-	64100	-	72500	-	79200	-	84100	-	
	Pro[kgf]	-	-	4980	-	5350	-	5970	-	6530	-	7390	-	8070	-	8570	-	
6215	P_1[kW]	-	-	75.3	-	75.3	-	75.3	-	58.5	-	45.2	-	37.7	-	21.4	-	CHH C-72
	T_{OUT}[N•m]	-	-	4300	-	5860	-	8200	-	8790	-	10100	-	11500	-	9650	-	CHF C-77
	T_{OUT}[kgf•m]	-	-	438	-	597	-	836	-	896	-	1030	-	1170	-	984	-	CVV C-84
	Pro[N]	-	-	49300	-	52900	-	59500	-	64900	-	73300	-	79700	-	90300	-	
	Pro[kgf]	-	-	5030	-	5390	-	6070	-	6620	-	7470	-	8120	-	9200	-	
6225	P_1[kW]	-	-	99.5	-	99.5	-	94.2	-	75.3	-	56.5	-	45.2	-	26.7	-	CHH C-72
	T_{OUT}[N•m]	-	-	5670	-	7730	-	10300	-	11300	-	12600	-	13800	-	12100	-	CHF C-77
	T_{OUT}[kgf•m]	-	-	578	-	788	-	1050	-	1150	-	1280	-	1410	-	1230	-	CVV C-84
	Pro[N]	-	-	52100	-	56100	-	62500	-	68200	-	77200	-	84100	-	95200	-	
	Pro[kgf]	-	-	5310	-	5720	-	6370	-	6950	-	7870	-	8570	-	9700	-	
6235	P_1[kW]	-	-	-	-	-	-	-	-	-	-	-	-	-	-	-	-	
	T_{OUT}[N•m]	-	-	-	-	-	-	-	-	-	-	-	-	-	-	-	-	
	T_{OUT}[kgf•m]	-	-	-	-	-	-	-	-	-	-	-	-	-	-	-	-	
	Pro[N]	-	-	-	-	-	-	-	-	-	-	-	-	-	-	-	-	
	Pro[kgf]	-	-	-	-	-	-	-	-	-	-	-	-	-	-	-	-	
6245	P_1[kW]	-	-	-	-	-	-	-	-	-	-	-	-	-	-	-	-	
	T_{OUT}[N•m]	-	-	-	-	-	-	-	-	-	-	-	-	-	-	-	-	
	T_{OUT}[kgf•m]	-	-	-	-	-	-	-	-	-	-	-	-	-	-	-	-	
	Pro[N]	-	-	-	-	-	-	-	-	-	-	-	-	-	-	-	-	
	Pro[kgf]	-	-	-	-	-	-	-	-	-	-	-	-	-	-	-	-	
6255	P_1[kW]	-	-	-	-	-	-	-	-	-	-	-	-	-	-	-	-	
	T_{OUT}[N•m]	-	-	-	-	-	-	-	-	-	-	-	-	-	-	-	-	
	T_{OUT}[kgf•m]	-	-	-	-	-	-	-	-	-	-	-	-	-	-	-	-	
	Pro[N]	-	-	-	-	-	-	-	-	-	-	-	-	-	-	-	-	
	Pro[kgf]	-	-	-	-	-	-	-	-	-	-	-	-	-	-	-	-	
6265	P_1[kW]	-	-	-	-	-	-	-	-	-	-	-	-	-	-	-	-	
	T_{OUT}[N•m]	-	-	-	-	-	-	-	-	-	-	-	-	-	-	-	-	
	T_{OUT}[kgf•m]	-	-	-	-	-	-	-	-	-	-	-	-	-	-	-	-	
	Pro[N]	-	-	-	-	-	-	-	-	-	-	-	-	-	-	-	-	
	Pro[kgf]	-	-	-	-	-	-	-	-	-	-	-	-	-	-	-	-	
6275	P_1[kW]	-	-	-	-	-	-	-	-	-	-	-	-	-	-	-	-	
	T_{OUT}[N•m]	-	-	-	-	-	-	-	-	-	-	-	-	-	-	-	-	
	T_{OUT}[kgf•m]	-	-	-	-	-	-	-	-	-	-	-	-	-	-	-	-	
	Pro[N]	-	-	-	-	-	-	-	-	-	-	-	-	-	-	-	-	
	Pro[kgf]	-	-	-	-	-	-	-	-	-	-	-	-	-	-	-	-	
Frame Size	Ratio[Z]	6	8	11	13	15	17	21	25	29	35	43	51	59	71	87	119	Page of Dim.
	n_2 [r/min]	292	219	159	135	117	103	83.3	70.0	60.3	50.0	40.7	34.3	29.7	24.6	20.1	14.7	

Note: 1. Allowable radial load Pro is the value at the midpoint of the output shaft. Refer to pages F-11~12 when radial load is off the midpoint of output shaft and for checking thrust load.
2. Refer to pages F-15~16 for allowable radial load for input shaft.

MEMO

Selection Tables 6000 Series Reducer

Double Reduction Ratio 104,121 ~ 7569 Frame Size: 6060DA ~ 6130DA

Input Speed	n_1 = 1450 r/min	n_1: Input Speed [r/min]	T_{out}: Allowable output torque [N·m, kgf·m]
		n_2: Output Speed [r/min]	Pro: Allowable output shaft radial load [N, kgf]
		P_1: Allowable input power [kW]	*Consult us for Pro of CNF and CHF type.

Frame Size	n_2 [r/min]	13.9	12.0	10.1	8.79	7.44	6.28	5.31	4.55	3.85	3.07	2.59	2.23	1.98	1.72
	Ratio [Z]	104	121	143	165	195	231	273	319	377	473	559	649	731	841
6060DA	P_1[kW]	**0.100**	**0.100**	**0.100**	**0.100**	**0.100**	**0.100**	**0.100**	**0.100**	**0.100**	**0.100**	**0.100**	**-**	**0.100**	**0.100**
	T_{OUT}[N•m]	24.0	24.0	24.0	24.0	24.0	24.0	24.0	24.0	24.0	24.0	24.0	-	24.0	24.0
	T_{OUT}[kgf•m]	2.45	2.45	2.45	2.45	2.45	2.45	2.45	2.45	2.45	2.45	2.45	-	2.45	2.45
	Pro[N]	1180	1180	1180	1180	1180	1180	1180	1180	1180	1180	1180	-	1180	1180
	Pro[kgf]	120	120	120	120	120	120	120	120	120	120	120	-	120	120
6065DA	P_1[kW]	**0.100**	**0.100**	**0.100**	**0.100**	**0.100**	**0.100**	**0.100**	**0.100**	**0.100**	**0.100**	**0.100**	**-**	**0.100**	**0.100**
	T_{OUT}[N•m]	30.0	30.0	30.0	30.0	30.0	30.0	30.0	30.0	30.0	30.0	30.0	-	30.0	30.0
	T_{OUT}[kgf•m]	3.06	3.06	3.06	3.06	3.06	3.06	3.06	3.06	3.06	3.06	3.06	-	3.06	3.06
	Pro[N]	1180	1140	1180	1180	1180	1180	1180	1180	1180	1180	1180	-	1180	1180
	Pro[kgf]	120	116	120	120	120	120	120	120	120	120	120	-	120	120
6070DA	P_1[kW]	**0.100**	**0.100**	**0.100**	**0.100**	**0.100**	**0.100**	**0.100**	**0.100**	**0.100**	**0.100**	**0.100**	**0.100**	**0.100**	**0.100**
	T_{OUT}[N•m]	45.0	45.0	45.0	45.0	45.0	45.0	45.0	45.0	45.0	45.0	45.0	45.0	45.0	45.0
	T_{OUT}[kgf•m]	4.59	4.59	4.59	4.59	4.59	4.59	4.59	4.59	4.59	4.59	4.59	4.59	4.59	4.59
	Pro[N]	1770	1770	1770	1770	1770	1770	1770	1770	1770	1770	1770	1770	1770	1770
	Pro[kgf]	180	180	180	180	180	180	180	180	180	180	180	180	180	180
6075DA	P_1[kW]	**0.100**	**0.100**	**0.100**	**0.100**	**0.100**	**0.100**	**0.100**	**0.100**	**0.100**	**0.100**	**0.100**	**0.100**	**0.100**	**0.100**
	T_{OUT}[N•m]	60.0	50.8	60.0	60.0	60.0	60.0	60.0	60.0	60.0	60.0	60.0	57.4	60.0	60.0
	T_{OUT}[kgf•m]	6.12	5.18	6.12	6.12	6.12	6.12	6.12	6.12	6.12	6.12	6.12	5.85	6.12	6.12
	Pro[N]	1770	1770	1770	1770	1770	1770	1770	1770	1770	1660	1660	1580	1660	1770
	Pro[kgf]	180	180	180	180	180	180	180	180	180	169	169	161	169	180
6090DA	P_1[kW]	0.243	0.209	0.177	0.153	0.130	0.110	**0.100**	**0.100**	**0.100**	**0.100**	**0.100**	**0.100**	**0.100**	**0.100**
	T_{OUT}[N•m]	150	150	150	150	150	150	150	150	150	150	150	146	150	150
	T_{OUT}[kgf•m]	15.3	15.3	15.3	15.3	15.3	15.3	15.3	15.3	15.3	15.3	15.3	14.9	15.3	15.3
	Pro[N]	3340	3340	3340	3340	3340	3340	3340	3290	3290	3310	3310	3300	3310	3290
	Pro[kgf]	340	340	340	340	340	340	340	336	336	338	338	336	338	336
6095DA	P_1[kW]	0.293	0.224	0.216	0.204	0.173	0.146	0.124	0.106	**0.100**	**0.100**	**0.100**	-	**0.100**	**0.100**
	T_{OUT}[N•m]	181	160	183	200	200	200	200	200	200	200	200	-	200	200
	T_{OUT}[kgf•m]	18.4	16.4	18.7	20.4	20.4	20.4	20.4	20.4	20.4	20.4	20.4	-	20.4	20.4
	Pro[N]	3340	3340	3340	3340	3340	3340	3340	3200	3200	3220	3220	-	3220	3200
	Pro[kgf]	340	340	340	340	340	340	340	326	326	328	328	-	328	326
6100DA	P_1[kW]	0.406	0.349	0.295	0.256	0.216	0.183	0.154	0.132	0.112	**0.100**	**0.100**	**0.100**	**0.100**	**0.100**
	T_{OUT}[N•m]	250	250	250	250	250	250	250	250	250	250	250	250	250	250
	T_{OUT}[kgf•m]	25.5	25.5	25.5	25.5	25.5	25.5	25.5	25.5	25.5	25.5	25.5	25.5	25.5	25.5
	Pro[N]	5400	5400	5400	5400	5400	5400	5400	5400	5400	5400	5400	5400	5400	5400
	Pro[kgf]	550	550	550	550	550	550	550	550	550	550	550	550	550	550
6105DA	P_1[kW]	0.429	0.429	0.354	0.307	0.260	0.219	0.185	0.159	0.134	0.107	**0.100**	**0.100**	**0.100**	**0.100**
	T_{OUT}[N•m]	265	308	300	300	300	300	300	300	300	300	300	296	300	300
	T_{OUT}[kgf•m]	27.0	31.4	30.6	30.6	30.6	30.6	30.6	30.6	30.6	30.6	30.6	30.2	30.6	30.6
	Pro[N]	5400	5400	5400	5400	5400	5400	5400	5400	5400	5400	5400	5090	5400	5400
	Pro[kgf]	550	550	550	550	550	550	550	550	550	550	550	519	550	550
6120DA	P_1[kW]	-	-	0.429	0.429	0.429	0.381	0.322	0.275	0.233	0.187	0.158	0.136	0.121	0.104
	T_{OUT}[N•m]	-	-	364	420	496	522	522	520	520	525	525	525	525	520
	T_{OUT}[kgf•m]	-	-	37.1	42.8	50.6	53.2	53.2	53.0	53.0	53.5	53.5	53.5	53.5	53.0
	Pro[N]	-	-	9810	9810	9810	9810	9810	9810	9810	9810	9810	9810	9810	9810
	Pro[kgf]	-	-	1000	1000	1000	1000	1000	1000	1000	1000	1000	1000	1000	1000
6120DB	P_1[kW]	0.852	0.732	0.619	0.537	0.454	0.381	-	-	-	-	-	-	-	-
	T_{OUT}[N•m]	525	525	525	525	525	522	-	-	-	-	-	-	-	-
	T_{OUT}[kgf•m]	53.5	53.5	53.5	53.5	53.5	53.2	-	-	-	-	-	-	-	-
	Pro[N]	9810	9810	9810	9810	9810	9810	-	-	-	-	-	-	-	-
	Pro[kgf]	1000	1000	1000	1000	1000	1000	-	-	-	-	-	-	-	-
6125DA	P_1[kW]	-	-	-	-	-	0.429	0.389	0.333	0.282	0.225	0.190	0.164	0.145	0.126
	T_{OUT}[N•m]	-	-	-	-	-	588	630	630	630	630	630	630	630	630
	T_{OUT}[kgf•m]	-	-	-	-	-	59.9	64.2	64.2	64.2	64.2	64.2	64.2	64.2	64.2
	Pro[N]	-	-	-	-	-	9810	9810	9810	9810	9810	9810	9810	9810	9810
	Pro[kgf]	-	-	-	-	-	1000	1000	1000	1000	1000	1000	1000	1000	1000
6125DB	P_1[kW]	1.02	0.867	0.743	0.644	0.545	0.460	0.389	0.333	-	-	-	-	-	-
	T_{OUT}[N•m]	630	622	630	630	630	630	630	630	-	-	-	-	-	-
	T_{OUT}[kgf•m]	64.2	63.4	64.2	64.2	64.2	64.2	64.2	64.2	-	-	-	-	-	-
	Pro[N]	9810	9810	9810	9810	9810	9810	9810	9810	-	-	-	-	-	-
	Pro[kgf]	1000	1000	1000	1000	1000	1000	1000	1000	-	-	-	-	-	-
6130DA	P_1[kW]	-	-	-	-	-	-	0.429	0.413	0.349	0.278	0.235	0.237	0.200	0.200
	T_{OUT}[N•m]	-	-	-	-	-	-	695	780	780	780	780	912	780	780
	T_{OUT}[kgf•m]	-	-	-	-	-	-	70.8	79.5	79.5	79.5	79.5	93.0	79.5	79.5
	Pro[N]	-	-	-	-	-	-	14700	14700	14700	14700	14700	14700	14700	14700
	Pro[kgf]	-	-	-	-	-	-	1500	1500	1500	1500	1500	1500	1500	1500
Frame Size	Ratio [Z]	104	121	143	165	195	231	273	319	377	473	559	649	731	841
	n_2 [r/min]	13.9	12.0	10.1	8.79	7.44	6.28	5.31	4.55	3.85	3.07	2.59	2.23	1.98	1.72

Note: 1. Allowable radial load Pro is the value at the midpoint of the output shaft. Refer to pages F-11~12 when radial load is off the midpoint of output shaft and for checking thrust load.
2. Refer to pages F-15~16 for allowable radial load for input shaft.

Selection Tables 6000 Series Reducer

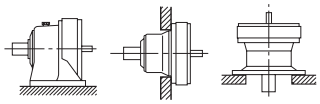

Input Speed	n_1 = 1450 r/min

1.45	1.16	0.980	0.784	0.702	0.572	0.476	0.417	0.327	0.282	0.235	0.192	n_2 [r/min]	Page of Dim.	Frame Size
1003	1247	1479	1849	2065	2537	3045	3481	4437	5133	6177	7569	Ratio [Z]		
-	**0.100**	-	**0.100**	-	-	-	-	-	-	-	-	P_1[kW]		
-	24.0	-	24.0	-	-	-	-	-	-	-	-	T_{OUT}[N•m]	CNH C-73	
-	2.45	-	2.45	-	-	-	-	-	-	-	-	T_{OUT}[kgf•m]	CNF C-78	**6060DA**
-	1180	-	1180	-	-	-	-	-	-	-	-	Pro[N]	CNV C-85	
-	120	-	120	-	-	-	-	-	-	-	-	Pro[kgf]		
-	**0.100**	-	**0.100**	-	-	-	-	-	-	-	-	P_1[kW]		
-	30.0	-	30.0	-	-	-	-	-	-	-	-	T_{OUT}[N•m]	CNH C-73	
-	3.06	-	3.06	-	-	-	-	-	-	-	-	T_{OUT}[kgf•m]	CNF C-78	**6065DA**
-	1180	-	1180	-	-	-	-	-	-	-	-	Pro[N]	CNV C-85	
-	120	-	120	-	-	-	-	-	-	-	-	Pro[kgf]		
0.100	**0.100**	-	**0.100**	**0.100**	**0.100**	-	-	-	-	-	-	P_1[kW]		
45.0	45.0	-	45.0	45.0	45.0	-	-	-	-	-	-	T_{OUT}[N•m]	CNH C-73	
4.59	4.59	-	4.59	4.59	4.59	-	-	-	-	-	-	T_{OUT}[kgf•m]	CNF C-78	**6070DA**
1770	1770	-	1770	1770	1770	-	-	-	-	-	-	Pro[N]	CNV C-85	
180	180	-	180	180	180	-	-	-	-	-	-	Pro[kgf]		
0.100	**0.100**	-	**0.100**	**0.100**	**0.100**	-	-	-	-	-	-	P_1[kW]		
57.4	60.0	-	60.0	57.4	57.4	-	-	-	-	-	-	T_{OUT}[N•m]	CNH C-73	
5.85	6.12	-	6.12	5.85	5.85	-	-	-	-	-	-	T_{OUT}[kgf•m]	CNF C-78	**6075DA**
1580	1660	-	1660	1580	1580	-	-	-	-	-	-	Pro[N]	CNV C-85	
161	169	-	169	161	161	-	-	-	-	-	-	Pro[kgf]		
0.100	**0.100**	**0.100**	**0.100**	**0.100**	**0.100**	**0.100**	**0.100**	**0.100**	**0.100**	-	-	P_1[kW]		
146	150	150	150	146	146	150	146	150	150	-	-	T_{OUT}[N•m]	CNH C-73	
14.9	15.3	15.3	15.3	14.9	14.9	15.3	14.9	15.3	15.3	-	-	T_{OUT}[kgf•m]	CNF C-78	**6090DA**
3300	3310	3310	3310	3300	3300	3310	3300	3310	3310	-	-	Pro[N]	CNV C-85	
336	338	338	338	336	336	338	336	338	338	-	-	Pro[kgf]		
-	**0.100**	**0.100**	**0.100**	-	-	**0.100**	-	**0.100**	**0.100**	-	-	P_1[kW]		
-	200	193	200	-	-	192	-	192	192	-	-	T_{OUT}[N•m]	CNH C-73	
-	20.4	19.6	20.4	-	-	19.6	-	19.6	19.6	-	-	T_{OUT}[kgf•m]	CNF C-78	**6095DA**
-	3220	3240	3220	-	-	3240	-	3240	3240	-	-	Pro[N]	CNV C-85	
-	328	330	328	-	-	330	-	330	330	-	-	Pro[kgf]		
0.100	**0.100**	**0.100**	**0.100**	**0.100**	**0.100**	**0.100**	**0.100**	**0.100**	**0.100**	-	-	P_1[kW]		
250	250	250	250	250	250	250	250	250	250	-	-	T_{OUT}[N•m]	CNH C-73	
25.5	25.5	25.5	25.5	25.5	25.5	25.5	25.5	25.5	25.5	-	-	T_{OUT}[kgf•m]	CNF C-78	**6100DA**
5400	5400	5400	5400	5400	5400	5400	5400	5400	5400	-	-	Pro[N]	CNV C-85	
550	550	550	550	550	550	550	550	550	550	-	-	Pro[kgf]		
0.100	**0.100**	**0.100**	**0.100**	**0.100**	**0.100**	**0.100**	**0.100**	**0.100**	**0.100**	-	-	P_1[kW]		
296	300	300	300	296	296	300	296	300	300	-	-	T_{OUT}[N•m]	CNH C-73	
30.2	30.6	30.6	30.6	30.2	30.2	30.6	30.2	30.6	30.6	-	-	T_{OUT}[kgf•m]	CNF C-78	**6105DA**
5090	5400	4780	5400	5090	5090	4780	5090	4780	4780	-	-	Pro[N]	CNV C-85	
519	550	488	550	519	519	488	519	488	488	-	-	Pro[kgf]		
0.100	**0.100**	**0.100**	**0.100**	**0.100**	**0.100**	**0.100**	**0.100**	**0.100**	**0.100**	-	-	P_1[kW]		
525	525	525	525	525	525	525	525	525	525	-	-	T_{OUT}[N•m]	CNH C-73	
53.5	53.5	53.5	53.5	53.5	53.5	53.5	53.5	53.5	53.5	-	-	T_{OUT}[kgf•m]	CNF C-78	**6120DA**
9810	9810	9780	9810	9810	9810	9780	9810	9780	9780	-	-	Pro[N]	CNV C-85	
1000	1000	997	1000	1000	1000	997	1000	997	997	-	-	Pro[kgf]		
-	-	-	-	-	-	-	-	-	-	**0.100**	**0.100**	P_1[kW]		
-	-	-	-	-	-	-	-	-	-	525	525	T_{OUT}[N•m]	CNH C-73	
-	-	-	-	-	-	-	-	-	-	53.5	53.5	T_{OUT}[kgf•m]	CNF C-78	**6120DB**
-	-	-	-	-	-	-	-	-	-	9780	9780	Pro[N]	CNV C-85	
-	-	-	-	-	-	-	-	-	-	997	997	Pro[kgf]		
0.106	**0.100**	**0.100**	**0.100**	**0.100**	**0.100**	**0.100**	**0.100**	**0.100**	**0.100**	-	-	P_1[kW]		
630	630	630	630	630	630	630	630	630	630	-	-	T_{OUT}[N•m]	CNH C-73	
64.2	64.2	64.2	64.2	64.2	64.2	64.2	64.2	64.2	64.2	-	-	T_{OUT}[kgf•m]	CNF C-78	**6125DA**
9810	9810	9560	9810	9810	9810	9560	9810	9560	9560	-	-	Pro[N]	CNV C-85	
1000	1000	974	1000	1000	1000	974	1000	974	974	-	-	Pro[kgf]		
-	-	-	-	-	-	-	-	-	-	**0.100**	**0.100**	P_1[kW]		
-	-	-	-	-	-	-	-	-	-	630	630	T_{OUT}[N•m]	CNH C-73	
-	-	-	-	-	-	-	-	-	-	64.2	64.2	T_{OUT}[kgf•m]	CNF C-78	**6125DB**
-	-	-	-	-	-	-	-	-	-	9560	9560	Pro[N]	CNV C-85	
-	-	-	-	-	-	-	-	-	-	974	974	Pro[kgf]		
0.200	**0.200**	**0.200**	**0.200**	**0.200**	**0.200**	**0.200**	**0.200**	**0.200**	**0.200**	-	-	P_1[kW]		
912	780	848	780	912	912	848	912	848	848	-	-	T_{OUT}[N•m]	CHH C-74	
93.0	79.5	86.5	79.5	93.0	93.0	86.5	93.0	86.5	86.5	-	-	T_{OUT}[kgf•m]	CHF C-79	**6130DA**
14700	14700	14700	14700	14700	14700	14700	14700	14700	14700	-	-	Pro[N]	CVV C-86	
1500	1500	1500	1500	1500	1500	1500	1500	1500	1500	-	-	Pro[kgf]		
1003	1247	1479	1849	2065	2537	3045	3481	4437	5133	6177	7569	Ratio [Z]	Page of Dim.	Frame Size
1.45	1.16	0.980	0.784	0.702	0.572	0.476	0.417	0.327	0.282	0.235	0.192	n_2 [r/min]		

Note: 3. Necessary input power for starting is printed in bold face. Do not exceed allowable output torque after startup.

Selection Tables 6000 Series Reducer

Double Reduction Ratio 104,121 ~ 7569 Frame Size: 6130DB ~ 6160DB

Input Speed	n_1 = 1450 r/min	n_1: Input Speed [r/min]	T_{out}: Allowable output torque [N·m, kgf·m]
		n_2: Output Speed [r/min]	Pro: Allowable output shaft radial load [N, kgf]
		P_1: Allowable input power [kW]	*Consult us for Pro of CNF and CHF type.

Frame Size	n_2 [r/min]	13.9	12.0	10.1	8.79	7.44	6.28	5.31	4.55	3.85	3.07	2.59	2.23	1.98	1.72
	Ratio [Z]	104	121	143	165	195	231	273	319	377	473	559	649	731	841
6130DB	P_1[kW]	1.27	1.09	0.920	0.798	0.675	0.570	0.482	0.413	0.349	-	-	-	-	-
	T_{OUT}[N•m]	780	780	780	780	780	780	780	780	780	-	-	-	-	-
	T_{OUT}[kgf•m]	79.5	79.5	79.5	79.5	79.5	79.5	79.5	79.5	79.5	-	-	-	-	-
	Pro[N]	14700	14700	14700	14700	14700	14700	14700	14700	14700	-	-	-	-	-
	Pro[kgf]	1500	1500	1500	1500	1500	1500	1500	1500	1500	-	-	-	-	-
6130DC	P_1[kW]	1.27	-	-	-	-	-	-	-	-	-	-	-	-	-
	T_{OUT}[N•m]	780	-	-	-	-	-	-	-	-	-	-	-	-	-
	T_{OUT}[kgf•m]	79.5	-	-	-	-	-	-	-	-	-	-	-	-	-
	Pro[N]	14700	-	-	-	-	-	-	-	-	-	-	-	-	-
	Pro[kgf]	1500	-	-	-	-	-	-	-	-	-	-	-	-	-
6135DA	P_1[kW]	-	-	-	-	-	-	-	0.429	0.421	0.335	0.284	0.273	0.217	0.200
	T_{OUT}[N•m]	-	-	-	-	-	-	-	812	940	940	940	1050	940	940
	T_{OUT}[kgf•m]	-	-	-	-	-	-	-	82.8	95.8	95.8	95.8	107	95.8	95.8
	Pro[N]	-	-	-	-	-	-	-	14700	14700	14700	14700	14700	14700	14700
	Pro[kgf]	-	-	-	-	-	-	-	1500	1500	1500	1500	1500	1500	1500
6135DB	P_1[kW]	1.52	1.31	1.11	0.961	0.813	0.686	0.581	0.497	0.421	0.335	-	-	-	-
	T_{OUT}[N•m]	940	940	940	940	940	940	940	940	940	940	-	-	-	-
	T_{OUT}[kgf•m]	95.8	95.8	95.8	95.8	95.8	95.8	95.8	95.8	95.8	95.8	-	-	-	-
	Pro[N]	14700	14700	14700	14700	14700	14700	14700	14700	14700	14700	-	-	-	-
	Pro[kgf]	1500	1500	1500	1500	1500	1500	1500	1500	1500	1500	-	-	-	-
6135DC	P_1[kW]	1.52	1.31	-	-	-	-	-	-	-	-	-	-	-	-
	T_{OUT}[N•m]	940	940	-	-	-	-	-	-	-	-	-	-	-	-
	T_{OUT}[kgf•m]	95.8	95.8	-	-	-	-	-	-	-	-	-	-	-	-
	Pro[N]	14700	14700	-	-	-	-	-	-	-	-	-	-	-	-
	Pro[kgf]	1500	1500	-	-	-	-	-	-	-	-	-	-	-	-
6140DA	P_1[kW]	-	-	-	-	-	-	-	-	0.429	0.429	0.370	0.318	0.283	0.246
	T_{OUT}[N•m]	-	-	-	-	-	-	-	-	960	1200	1230	1230	1230	1230
	T_{OUT}[kgf•m]	-	-	-	-	-	-	-	-	97.8	123	125	125	125	125
	Pro[N]	-	-	-	-	-	-	-	-	16000	16000	16000	16000	16000	16000
	Pro[kgf]	-	-	-	-	-	-	-	-	1630	1630	1630	1630	1630	1630
6140DB	P_1[kW]	1.60	1.60	1.45	1.25	1.06	0.895	0.757	0.648	0.548	0.437	0.370	-	-	-
	T_{OUT}[N•m]	986	1150	1230	1230	1230	1230	1230	1230	1230	1230	1230	-	-	-
	T_{OUT}[kgf•m]	100	117	125	125	125	125	125	125	125	125	125	-	-	-
	Pro[N]	16000	16000	16000	16000	16000	16000	16000	16000	16000	16000	16000	-	-	-
	Pro[kgf]	1630	1630	1630	1630	1630	1630	1630	1630	1630	1630	1630	-	-	-
69140DC	P_1[kW]	1.99	1.71	1.45	1.25	-	-	-	-	-	-	-	-	-	-
	T_{OUT}[N•m]	1230	1230	1230	1230	-	-	-	-	-	-	-	-	-	-
	T_{OUT}[kgf•m]	125	125	125	125	-	-	-	-	-	-	-	-	-	-
	Pro[N]	16000	16000	16000	16000	-	-	-	-	-	-	-	-	-	-
	Pro[kgf]	1630	1630	1630	1630	-	-	-	-	-	-	-	-	-	-
6145DA	P_1[kW]	-	-	-	-	-	-	-	-	-	-	0.413	0.356	0.316	0.275
	T_{OUT}[N•m]	-	-	-	-	-	-	-	-	-	-	1370	1370	1370	1370
	T_{OUT}[kgf•m]	-	-	-	-	-	-	-	-	-	-	140	140	140	140
	Pro[N]	-	-	-	-	-	-	-	-	-	-	15700	16000	15700	15800
	Pro[kgf]	-	-	-	-	-	-	-	-	-	-	1600	1630	1600	1610
6145DB	P_1[kW]	-	-	1.60	1.39	1.17	0.977	0.827	0.725	0.613	0.489	0.413	0.356	-	0.275
	T_{OUT}[N•m]	-	-	1360	1360	1360	1340	1340	1370	1370	1370	1370	1370	-	1370
	T_{OUT}[kgf•m]	-	-	138	138	138	136	136	140	140	140	140	140	-	140
	Pro[N]	-	-	16000	16000	16000	16000	16000	15800	15800	15700	15700	16000	-	15800
	Pro[kgf]	-	-	1630	1630	1630	1630	1630	1610	1610	1600	1600	1630	-	1610
6145DC	P_1[kW]	2.22	1.80	1.62	1.39	-	-	-	-	-	-	-	-	-	-
	T_{OUT}[N•m]	1370	1290	1370	1360	-	-	-	-	-	-	-	-	-	-
	T_{OUT}[kgf•m]	140	132	140	138	-	-	-	-	-	-	-	-	-	-
	Pro[N]	15900	16000	15900	16000	-	-	-	-	-	-	-	-	-	-
	Pro[kgf]	1620	1630	1620	1630	-	-	-	-	-	-	-	-	-	-
6160DA	P_1[kW]	-	-	-	1.60	1.52	1.28	1.08	0.928	0.785	0.619	0.524	0.456	0.400	0.400
	T_{OUT}[N•m]	-	-	-	1560	1760	1760	1760	1760	1760	1740	1740	1760	1740	1760
	T_{OUT}[kgf•m]	-	-	-	159	179	179	179	179	179	177	177	179	177	179
	Pro[N]	-	-	-	22100	22100	22100	22100	22100	22100	22100	22100	22100	22100	22100
	Pro[kgf]	-	-	-	2250	2250	2250	2250	2250	2250	2250	2250	2250	2250	2250
6160DB	P_1[kW]	2.85	2.45	2.07	1.79	1.52	1.28	-	-	-	-	-	-	-	-
	T_{OUT}[N•m]	1760	1760	1760	1760	1760	1760	-	-	-	-	-	-	-	-
	T_{OUT}[kgf•m]	179	179	179	179	179	179	-	-	-	-	-	-	-	-
	Pro[N]	22100	22100	22100	22100	22100	22100	-	-	-	-	-	-	-	-
	Pro[kgf]	2250	2250	2250	2250	2250	2250	-	-	-	-	-	-	-	-
Frame Size	Ratio [Z]	104	121	143	165	195	231	273	319	377	473	559	649	731	841
	n_2 [r/min]	13.9	12.0	10.1	8.79	7.44	6.28	5.31	4.55	3.85	3.07	2.59	2.23	1.98	1.72

Note: 1. Allowable radial load Pro is the value at the midpoint of the output shaft. Refer to pages F-11~12 when radial load is off the midpoint of output shaft and for checking thrust load.
2. Refer to pages F-15~16 for allowable radial load for input shaft.

Selection Tables 6000 Series Reducer

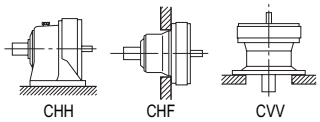

Input Speed	n_1 = 1450 r/min

1.45	1.16	0.980	0.784	0.702	0.572	0.476	0.417	0.327	0.282	0.235	0.192	n_2 [r/min]	Page of Dim.	Frame Size
1003	1247	1479	1849	2065	2537	3045	3481	4437	5133	6177	7569	Ratio [Z]		
-	-	-	-	-	-	-	-	-	-	**0.200**	**0.200**	P_1[kW]		
-	-	-	-	-	-	-	-	-	-	848	848	T_{OUT}[N•m]	CHH C-74	
-	-	-	-	-	-	-	-	-	-	86.5	86.5	T_{OUT}[kgf•m]	CHF C-79	**6130DB**
-	-	-	-	-	-	-	-	-	-	14700	14700	Pro[N]	CVV C-86	
-	-	-	-	-	-	-	-	-	-	1500	1500	Pro[kgf]		
-	-	-	-	-	-	-	-	-	-	-	-	P_1[kW]		
-	-	-	-	-	-	-	-	-	-	-	-	T_{OUT}[N•m]	CHH C-74	
-	-	-	-	-	-	-	-	-	-	-	-	T_{OUT}[kgf•m]	CHF C-79	**6130DC**
-	-	-	-	-	-	-	-	-	-	-	-	Pro[N]	CVV C-86	
-	-	-	-	-	-	-	-	-	-	-	-	Pro[kgf]		
0.200	**0.200**	**0.200**	**0.200**	**0.200**	**0.200**	**0.200**	**0.200**	**0.200**	**0.200**	-	-	P_1[kW]		
1050	940	979	940	1050	1050	979	1050	979	979	-	-	T_{OUT}[N•m]	CHH C-74	
107	95.8	99.8	95.8	107	107	99.8	107	99.8	99.8	-	-	T_{OUT}[kgf•m]	CHF C-79	**6135DA**
14700	14700	14700	14700	14700	14700	14700	14700	14700	14700	-	-	Pro[N]	CVV C-86	
	1500	1500	1500	1500	1500	1500	1500	1500	1500	1500	-	Pro[kgf]		
-	-	-	-	-	-	-	-	-	-	**0.200**	**0.200**	P_1[kW]		
-	-	-	-	-	-	-	-	-	-	979	979	T_{OUT}[N•m]	CHH C-74	
-	-	-	-	-	-	-	-	-	-	99.8	99.8	T_{OUT}[kgf•m]	CHF C-79	**6135DB**
-	-	-	-	-	-	-	-	-	-	14700	14700	Pro[N]	CVV C-86	
-	-	-	-	-	-	-	-	-	-	1500	1500	Pro[kgf]		
-	-	-	-	-	-	-	-	-	-	-	-	P_1[kW]		
-	-	-	-	-	-	-	-	-	-	-	-	T_{OUT}[N•m]	CHH C-74	
-	-	-	-	-	-	-	-	-	-	-	-	T_{OUT}[kgf•m]	CHF C-79	**6135DC**
-	-	-	-	-	-	-	-	-	-	-	-	Pro[N]	CVV C-86	
-	-	-	-	-	-	-	-	-	-	-	-	Pro[kgf]		
0.206	**0.200**	**0.200**	**0.200**	**0.200**	**0.200**	**0.200**	**0.200**	**0.200**	**0.200**	-	-	P_1[kW]		
1230	1230	1230	1230	1230	1230	1230	1230	1230	1230	-	-	T_{OUT}[N•m]	CHH C-74	
125	125	125	125	125	125	125	125	125	125	-	-	T_{OUT}[kgf•m]	CHF C-79	**6140DA**
16000	16000	16000	16000	16000	16000	16000	16000	16000	16000	-	-	Pro[N]	CVV C-86	
1630	1630	1630	1630	1630	1630	1630	1630	1630	1630	-	-	Pro[kgf]		
-	-	-	-	-	-	-	-	-	-	**0.200**	**0.200**	P_1[kW]		
-	-	-	-	-	-	-	-	-	-	1230	1230	T_{OUT}[N•m]	CHH C-74	
-	-	-	-	-	-	-	-	-	-	125	125	T_{OUT}[kgf•m]	CHF C-79	**6140DB**
-	-	-	-	-	-	-	-	-	-	16000	16000	Pro[N]	CVV C-86	
-	-	-	-	-	-	-	-	-	-	1630	1630	Pro[kgf]		
-	-	-	-	-	-	-	-	-	-	-	-	P_1[kW]		
-	-	-	-	-	-	-	-	-	-	-	-	T_{OUT}[N•m]	CHH C-74	
-	-	-	-	-	-	-	-	-	-	-	-	T_{OUT}[kgf•m]	CHF C-79	**69140DC**
-	-	-	-	-	-	-	-	-	-	-	-	Pro[N]	CVV C-86	
-	-	-	-	-	-	-	-	-	-	-	-	Pro[kgf]		
0.230	**0.200**	**0.200**	**0.200**	**0.200**	**0.200**	**0.200**	**0.200**	**0.200**	**0.200**	-	-	P_1[kW]		
1370	1370	1250	1370	1370	1370	1250	1370	1250	1250	-	-	T_{OUT}[N•m]	CHH C-74	
140	140	127	140	140	140	127	140	127	127	-	-	T_{OUT}[kgf•m]	CHF C-79	**6145DA**
16000	15700	16000	15700	16000	16000	16000	16000	16000	16000	-	-	Pro[N]	CVV C-86	
1630	1600	1630	1600	1630	1630	1630	1630	1630	1630	-	-	Pro[kgf]		
-	-	-	-	-	-	-	-	-	-	**0.200**	**0.200**	P_1[kW]		
-	-	-	-	-	-	-	-	-	-	1250	1250	T_{OUT}[N•m]	CHH C-74	
-	-	-	-	-	-	-	-	-	-	127	127	T_{OUT}[kgf•m]	CHF C-79	**6145DB**
-	-	-	-	-	-	-	-	-	-	16000	16000	Pro[N]	CVV C-86	
-	-	-	-	-	-	-	-	-	-	1630	1630	Pro[kgf]		
-	-	-	-	-	-	-	-	-	-	-	-	P_1[kW]		
-	-	-	-	-	-	-	-	-	-	-	-	T_{OUT}[N•m]	CHH C-74	
-	-	-	-	-	-	-	-	-	-	-	-	T_{OUT}[kgf•m]	CHF C-79	**6145DC**
-	-	-	-	-	-	-	-	-	-	-	-	Pro[N]	CVV C-86	
-	-	-	-	-	-	-	-	-	-	-	-	Pro[kgf]		
0.400	**0.400**	**0.200**	**0.200**	**0.200**	**0.200**	**0.200**	**0.200**	**0.200**	**0.200**	**0.200**	**0.200**	P_1[kW]		
1760	1740	1760	1740	1760	1760	1760	1760	1760	1760	1760	1760	T_{OUT}[N•m]	CHH C-74	
179	177	179	177	179	179	179	179	179	179	179	179	T_{OUT}[kgf•m]	CHF C-79	**6160DA**
22100	22100	22100	22100	22100	22100	22100	22100	22100	22100	22100	22100	Pro[N]	CVV C-86	
2250	2250	2250	2250	2250	2250	2250	2250	2250	2250	2250	2250	Pro[kgf]		
-	-	-	-	-	-	-	-	-	-	-	-	P_1[kW]		
-	-	-	-	-	-	-	-	-	-	-	-	T_{OUT}[N•m]	CHH C-74	
-	-	-	-	-	-	-	-	-	-	-	-	T_{OUT}[kgf•m]	CHF C-79	**6160DB**
-	-	-	-	-	-	-	-	-	-	-	-	Pro[N]	CVV C-86	
-	-	-	-	-	-	-	-	-	-	-	-	Pro[kgf]		
1003	1247	1479	1849	2065	2537	3045	3481	4437	5133	6177	7569	Ratio [Z]	Page of Dim.	Frame Size
1.45	1.16	0.980	0.784	0.702	0.572	0.476	0.417	0.327	0.282	0.235	0.192	n_2 [r/min]		

Note: 3. Necessary input power for starting is printed in bold face. Do not exceed allowable output torque after startup.

Selection Tables 6000 Series Reducer

Double Reduction Ratio 104,121 ~ 7569 Frame Size: 6160DC ~ 6185DA

Input Speed	n_1 = 1450 r/min	n_1: Input Speed [r/min]	T_{out}: Allowable output torque [N·m, kgf·m]
		n_2: Output Speed [r/min]	Pro: Allowable output shaft radial load [N, kgf]
		P_1: Allowable input power [kW]	*Consult us for Pro of CNF and CHF type.

Frame Size	n_2 [r/min]	13.9	12.0	10.1	8.79	7.44	6.28	5.31	4.55	3.85	3.07	2.59	2.23	1.98	1.72
	Ratio [Z]	104	121	143	165	195	231	273	319	377	473	559	649	731	841
6160DC	P_1[kW]	2.85	2.45	2.07	-	-	-	-	-	-	-	-	-	-	-
	T_{OUT}[N•m]	1760	1760	1760	-	-	-	-	-	-	-	-	-	-	-
	T_{OUT}[kgf•m]	179	179	179	-	-	-	-	-	-	-	-	-	-	-
	Pro[N]	22100	22100	22100	-	-	-	-	-	-	-	-	-	-	-
	Pro[kgf]	2250	2250	2250	-	-	-	-	-	-	-	-	-	-	-
6165DA	P_1[kW]	-	-	-	-	1.60	1.53	1.30	1.11	0.940	0.749	0.634	0.546	0.485	0.421
	T_{OUT}[N•m]	-	-	-	-	1850	2100	2100	2100	2100	2100	2100	2100	2100	2100
	T_{OUT}[kgf•m]	-	-	-	-	188	214	214	214	214	214	214	214	214	214
	Pro[N]	-	-	-	-	22100	22100	22100	22100	22100	22100	22100	22100	22100	22100
	Pro[kgf]	-	-	-	-	2250	2250	2250	2250	2250	2250	2250	2250	2250	2250
6165DB	P_1[kW]	3.36	2.93	2.48	2.15	1.82	1.53	1.30	-	-	-	-	-	-	-
	T_{OUT}[N•m]	2070	2100	2100	2100	2100	2100	2100	-	-	-	-	-	-	-
	T_{OUT}[kgf•m]	211	214	214	214	214	214	214	-	-	-	-	-	-	-
	Pro[N]	22100	22100	22100	22100	22100	22100	22100	-	-	-	-	-	-	-
	Pro[kgf]	2250	2250	2250	2250	2250	2250	2250	-	-	-	-	-	-	-
6165DC	P_1[kW]	3.41	2.93	2.48	2.15	-	-	-	-	-	-	-	-	-	-
	T_{OUT}[N•m]	2100	2100	2100	2100	-	-	-	-	-	-	-	-	-	-
	T_{OUT}[kgf•m]	214	214	214	214	-	-	-	-	-	-	-	-	-	-
	Pro[N]	22100	22100	22100	22100	-	-	-	-	-	-	-	-	-	-
	Pro[kgf]	2250	2250	2250	2250	-	-	-	-	-	-	-	-	-	-
6170DA	P_1[kW]	-	-	-	-	-	1.60	1.56	1.34	1.13	0.902	0.764	0.658	0.584	0.508
	T_{OUT}[N•m]	-	-	-	-	-	2190	2530	2530	2530	2530	2530	2530	2530	2530
	T_{OUT}[kgf•m]	-	-	-	-	-	223	258	258	258	258	258	258	258	258
	Pro[N]	-	-	-	-	-	29500	29500	29500	29500	29500	29500	29500	29500	29500
	Pro[kgf]	-	-	-	-	-	3010	3010	3010	3010	3010	3010	3010	3010	3010
6170DB	P_1[kW]	-	3.36	2.98	2.59	2.19	1.85	1.56	1.34	-	-	-	-	-	-
	T_{OUT}[N•m]	-	2410	2530	2530	2530	2530	2530	2530	-	-	-	-	-	-
	T_{OUT}[kgf•m]	-	245	258	258	258	258	258	258	-	-	-	-	-	-
	Pro[N]	-	29500	29500	29500	29500	29500	29500	29500	-	-	-	-	-	-
	Pro[kgf]	-	3010	3010	3010	3010	3010	3010	3010	-	-	-	-	-	-
6170DC	P_1[kW]	4.10	3.53	2.98	2.59	2.19	1.85	-	-	-	-	-	-	-	-
	T_{OUT}[N•m]	2530	2530	2530	2530	2530	2530	-	-	-	-	-	-	-	-
	T_{OUT}[kgf•m]	258	258	258	258	258	258	-	-	-	-	-	-	-	-
	Pro[N]	29500	29500	29500	29500	29500	29500	-	-	-	-	-	-	-	-
	Pro[kgf]	3010	3010	3010	3010	3010	3010	-	-	-	-	-	-	-	-
6175DA	P_1[kW]	-	-	-	-	-	-	1.60	1.60	1.41	1.12	0.951	0.819	0.727	0.632
	T_{OUT}[N•m]	-	-	-	-	-	-	2590	3020	3150	3150	3150	3150	3150	3150
	T_{OUT}[kgf•m]	-	-	-	-	-	-	264	308	321	321	321	321	321	321
	Pro[N]	-	-	-	-	-	-	29500	29500	29500	29500	29500	29500	29500	29500
	Pro[kgf]	-	-	-	-	-	-	3010	3010	3010	3010	3010	3010	3010	3010
6175DB	P_1[kW]	-	-	3.36	3.22	2.73	2.30	1.95	1.67	1.41	-	-	-	-	-
	T_{OUT}[N•m]	-	-	2840	3150	3150	3150	3150	3150	3150	-	-	-	-	-
	T_{OUT}[kgf•m]	-	-	290	321	321	321	321	321	321	-	-	-	-	-
	Pro[N]	-	-	29500	29500	29500	29500	29500	29500	29500	-	-	-	-	-
	Pro[kgf]	-	-	3010	3010	3010	3010	3010	3010	3010	-	-	-	-	-
6175DC	P_1[kW]	5.11	4.39	3.72	3.22	2.73	2.30	1.95	-	-	-	-	-	-	-
	T_{OUT}[N•m]	3150	3150	3150	3150	3150	3150	3150	-	-	-	-	-	-	-
	T_{OUT}[kgf•m]	321	321	321	321	321	321	321	-	-	-	-	-	-	-
	Pro[N]	29500	29500	29500	29500	29500	29500	29500	-	-	-	-	-	-	-
	Pro[kgf]	3010	3010	3010	3010	3010	3010	3010	-	-	-	-	-	-	-
6180DA	P_1[kW]	-	-	-	3.36	3.36	2.96	2.50	2.14	1.81	1.45	1.22	1.05	0.937	0.813
	T_{OUT}[N•m]	-	-	-	3280	3880	4050	4050	4050	4050	4060	4060	4050	4060	4050
	T_{OUT}[kgf•m]	-	-	-	335	395	413	413	413	413	414	414	413	414	413
	Pro[N]	-	-	-	41700	41700	41700	41700	41700	41700	41700	41700	41700	41700	41700
	Pro[kgf]	-	-	-	4250	4250	4250	4250	4250	4250	4250	4250	4250	4250	4250
6180DB	P_1[kW]	6.59	5.66	4.79	4.15	3.51	2.96	2.50	2.14	-	-	-	-	-	-
	T_{OUT}[N•m]	4060	4060	4060	4060	4060	4050	4050	4050	-	-	-	-	-	-
	T_{OUT}[kgf•m]	414	414	414	414	414	413	413	413	-	-	-	-	-	-
	Pro[N]	40200	41700	41700	41700	41700	41700	41700	41700	-	-	-	-	-	-
	Pro[kgf]	4100	4250	4250	4250	4250	4250	4250	4250	-	-	-	-	-	-
6185DA	P_1[kW]	-	-	-	-	-	3.36	3.09	2.64	2.24	1.78	1.51	1.30	1.15	1.00
	T_{OUT}[N•m]	-	-	-	-	-	4600	5000	5000	5000	5000	5000	5000	5000	5000
	T_{OUT}[kgf•m]	-	-	-	-	-	468	510	510	510	510	510	510	510	510
	Pro[N]	-	-	-	-	-	41700	41700	41700	41700	41700	41700	41600	41700	41700
	Pro[kgf]	-	-	-	-	-	4250	4250	4250	4250	4250	4250	4240	4250	4250
Frame Size	Ratio [Z]	104	121	143	165	195	231	273	319	377	473	559	649	731	841
	n_2 [r/min]	13.9	12.0	10.1	8.79	7.44	6.28	5.31	4.55	3.85	3.07	2.59	2.23	1.98	1.72

Note: 1. Allowable radial load Pro is the value at the midpoint of the output shaft. Refer to pages F-11~12 when radial load is off the midpoint of output shaft and for checking thrust load.
2. Refer to pages F-15~16 for allowable radial load for input shaft.

Selection Tables 6000 Series Reducer

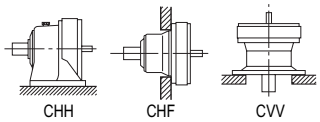

Input Speed	n_1 = 1450 r/min

1.45	1.16	0.980	0.784	0.702	0.572	0.476	0.417	0.327	0.282	0.235	0.192	n_2 [r/min]	Page of Dim.	Frame Size
1003	1247	1479	1849	2065	2537	3045	3481	4437	5133	6177	7569	Ratio [Z]		
-	-	-	-	-	-	-	-	-	-	-	-	P_1[kW]		
-	-	-	-	-	-	-	-	-	-	-	-	T_{OUT}[N•m]	CHH C-75	
-	-	-	-	-	-	-	-	-	-	-	-	T_{OUT}[kgf•m]	CHF C-80	**6160DC**
-	-	-	-	-	-	-	-	-	-	-	-	Pro[N]	CVV C-87	
-	-	-	-	-	-	-	-	-	-	-	-	Pro[kgf]		
0.400	**0.400**	**0.400**	**0.200**	**0.200**	**0.200**	**0.200**	**0.200**	**0.200**	**0.200**	**0.200**	**0.200**	P_1[kW]		
2100	2100	2050	2100	2100	2100	2050	2100	2050	2050	2050	2050	T_{OUT}[N•m]	CHH C-74	
214	214	209	214	214	214	209	214	209	209	209	209	T_{OUT}[kgf•m]	CHF C-79	**6165DA**
22100	22100	21800	22100	22100	22100	21800	22100	21800	21800	21800	21800	Pro[N]	CVV C-86	
2250	2250	2220	2250	2250	2250	2220	2250	2220	2220	2220	2220	Pro[kgf]		
-	-	-	-	-	-	-	-	-	-	-	-	P_1[kW]		
-	-	-	-	-	-	-	-	-	-	-	-	T_{OUT}[N•m]	CHH C-74	
-	-	-	-	-	-	-	-	-	-	-	-	T_{OUT}[kgf•m]	CHF C-79	**6165DB**
-	-	-	-	-	-	-	-	-	-	-	-	Pro[N]	CVV C-86	
-	-	-	-	-	-	-	-	-	-	-	-	Pro[kgf]		
-	-	-	-	-	-	-	-	-	-	-	-	P_1[kW]		
-	-	-	-	-	-	-	-	-	-	-	-	T_{OUT}[N•m]	CHH C-75	
-	-	-	-	-	-	-	-	-	-	-	-	T_{OUT}[kgf•m]	CHF C-80	**6165DC**
-	-	-	-	-	-	-	-	-	-	-	-	Pro[N]	CVV C-87	
-	-	-	-	-	-	-	-	-	-	-	-	Pro[kgf]		
0.426	**0.400**	**0.400**	**0.400**	0.207	**0.200**	**0.200**	**0.200**	**0.200**	**0.200**	**0.200**	**0.200**	P_1[kW]		
2530	2530	2530	2530	2530	2530	2530	2530	2530	2530	2530	2530	T_{OUT}[N•m]	CHH C-74	
258	258	258	258	258	258	258	258	258	258	258	258	T_{OUT}[kgf•m]	CHF C-79	**6170DA**
29500	29500	29500	29500	29500	29500	29500	29500	29500	29500	29500	29500	Pro[N]	CVV C-86	
3010	3010	3010	3010	3010	3010	3010	3010	3010	3010	3010	3010	Pro[kgf]		
-	-	-	-	-	-	-	-	-	-	-	-	P_1[kW]		
-	-	-	-	-	-	-	-	-	-	-	-	T_{OUT}[N•m]	CHH C-74	
-	-	-	-	-	-	-	-	-	-	-	-	T_{OUT}[kgf•m]	CHF C-79	**6170DB**
-	-	-	-	-	-	-	-	-	-	-	-	Pro[N]	CVV C-86	
-	-	-	-	-	-	-	-	-	-	-	-	Pro[kgf]		
-	-	-	-	-	-	-	-	-	-	-	-	P_1[kW]		
-	-	-	-	-	-	-	-	-	-	-	-	T_{OUT}[N•m]	CHH C-75	
-	-	-	-	-	-	-	-	-	-	-	-	T_{OUT}[kgf•m]	CHF C-80	**6170DC**
-	-	-	-	-	-	-	-	-	-	-	-	Pro[N]	CVV C-87	
-	-	-	-	-	-	-	-	-	-	-	-	Pro[kgf]		
0.530	0.426	**0.400**	**0.400**	**0.400**	**0.209**	**0.200**	**0.200**	**0.200**	**0.200**	**0.200**	**0.200**	P_1[kW]		
3150	3150	3150	3150	3150	3150	3150	3150	3150	3150	3150	3150	T_{OUT}[N•m]	CHH C-74	
321	321	321	321	321	321	321	321	321	321	321	321	T_{OUT}[kgf•m]	CHF C-79	**6175DA**
29500	29500	29500	29500	29500	29500	29500	29500	29500	29500	29500	29500	Pro[N]	CVV C-86	
3010	3010	3010	3010	3010	3010	3010	3010	3010	3010	3010	3010	Pro[kgf]		
-	-	-	-	-	-	-	-	-	-	-	-	P_1[kW]		
-	-	-	-	-	-	-	-	-	-	-	-	T_{OUT}[N•m]	CHH C-74	
-	-	-	-	-	-	-	-	-	-	-	-	T_{OUT}[kgf•m]	CHF C-79	**6175DB**
-	-	-	-	-	-	-	-	-	-	-	-	Pro[N]	CVV C-86	
-	-	-	-	-	-	-	-	-	-	-	-	Pro[kgf]		
-	-	-	-	-	-	-	-	-	-	-	-	P_1[kW]		
-	-	-	-	-	-	-	-	-	-	-	-	T_{OUT}[N•m]	CHH C-75	
-	-	-	-	-	-	-	-	-	-	-	-	T_{OUT}[kgf•m]	CHF C-80	**6175DC**
-	-	-	-	-	-	-	-	-	-	-	-	Pro[N]	CVV C-87	
-	-	-	-	-	-	-	-	-	-	-	-	Pro[kgf]		
0.750	**0.750**	0.463	**0.400**	**0.400**	**0.400**	**0.400**	**0.400**	**0.400**	**0.400**	**0.400**	**0.400**	P_1[kW]		
4050	4060	4060	4060	4050	4050	4060	4050	4060	4060	4060	4060	T_{OUT}[N•m]	CHH C-74	
413	414	414	414	413	413	414	413	414	414	414	414	T_{OUT}[kgf•m]	CHF C-79	**6180DA**
41700	41700	41700	41700	41700	41700	41700	41700	41700	41700	41700	41700	Pro[N]	CVV C-86	
4250	4250	4250	4250	4250	4250	4250	4250	4250	4250	4250	4250	Pro[kgf]		
-	-	-	-	-	-	-	-	-	-	-	-	P_1[kW]		
-	-	-	-	-	-	-	-	-	-	-	-	T_{OUT}[N•m]	CHH C-75	
-	-	-	-	-	-	-	-	-	-	-	-	T_{OUT}[kgf•m]	CHF C-80	**6180DB**
-	-	-	-	-	-	-	-	-	-	-	-	Pro[N]	CVV C-87	
-	-	-	-	-	-	-	-	-	-	-	-	Pro[kgf]		
0.841	**0.750**	**0.750**	**0.750**	0.408	**0.400**	**0.400**	**0.400**	**0.400**	**0.400**	**0.400**	**0.400**	P_1[kW]		
5000	5000	5000	5000	5000	5000	5000	5000	5000	5000	5000	5000	T_{OUT}[N•m]	CHH C-74	
510	510	510	510	510	510	510	510	510	510	510	510	T_{OUT}[kgf•m]	CHF C-79	**6185DA**
41600	41700	41700	41700	41600	41600	41700	41600	41700	41700	41700	41700	Pro[N]	CVV C-86	
4240	4250	4250	4250	4240	4240	4250	4240	4250	4250	4250	4250	Pro[kgf]		
1003	1247	1479	1849	2065	2537	3045	3481	4437	5133	6177	7569	Ratio [Z]	Page of Dim.	Frame Size
1.45	1.16	0.980	0.784	0.702	0.572	0.476	0.417	0.327	0.282	0.235	0.192	n_2 [r/min]		

Note: 3. Necessary input power for starting is printed in bold face. Do not exceed allowable output torque after startup.

Selection Tables 6000 Series Reducer

Double Reduction Ratio 104,121 ~ 7569 Frame Size: 6185DB ~ 6235DB

Input Speed	n_1 = 1450 r/min	n_1: Input Speed [r/min]	T_{out}: Allowable output torque [N·m, kgf·m]
		n_2: Output Speed [r/min]	Pro: Allowable output shaft radial load [N, kgf]
		P_1: Allowable input power [kW]	*Consult us for Pro of CNF and CHF type.

Frame Size	n_2 [r/min]	13.9	12.0	10.1	8.79	7.44	6.28	5.31	4.55	3.85	3.07	2.59	2.23	1.98	1.72
	Ratio [Z]	104	121	143	165	195	231	273	319	377	473	559	649	731	841
6185DB	P_1[kW]	7.95	6.70	5.78	5.03	4.26	3.65	3.09	2.64	2.24	-	-	-	-	-
	T_{OUT}[N•m]	4900	4810	4900	4920	4920	5000	5000	5000	5000	-	-	-	-	-
	T_{OUT}[kgf•m]	500	490	500	502	502	510	510	510	510	-	-	-	-	-
	Pro[N]	39900	41700	41700	41700	41700	41700	41700	41700	41700	-	-	-	-	-
	Pro[kgf]	4060	4250	4250	4250	4250	4250	4250	4250	4250	-	-	-	-	-
6190DA	P_1[kW]	-	-	6.25	6.25	5.52	4.66	3.94	3.37	2.85	2.28	1.93	1.66	1.47	1.28
	T_{OUT}[N•m]	-	-	5300	6110	6380	6380	6380	6380	6380	6380	6380	6380	6380	6380
	T_{OUT}[kgf•m]	-	-	540	623	650	650	650	650	650	650	650	650	650	650
	Pro[N]	-	-	59000	59000	58900	59000	59000	59000	59000	59000	59000	58600	59000	59000
	Pro[kgf]	-	-	6010	6010	6000	6010	6010	6010	6010	6010	6010	5970	6010	6010
6190DB	P_1[kW]	10.3	8.90	7.53	6.52	5.52	4.66	-	-	-	-	-	-	-	-
	T_{OUT}[N•m]	6380	6380	6380	6380	6380	6380	-	-	-	-	-	-	-	-
	T_{OUT}[kgf•m]	650	650	650	650	650	650	-	-	-	-	-	-	-	-
	Pro[N]	55800	59000	58700	58900	58900	59000	-	-	-	-	-	-	-	-
	Pro[kgf]	5690	6010	5980	6000	6000	6010	-	-	-	-	-	-	-	-
6195DA	P_1[kW]	-	-	-	-	5.63	5.81	4.92	4.21	3.56	2.84	2.40	2.07	1.84	1.60
	T_{OUT}[N•m]	-	-	-	-	6500	7960	7960	7960	7960	7960	7960	7960	7960	7960
	T_{OUT}[kgf•m]	-	-	-	-	663	811	811	811	811	811	811	811	811	811
	Pro[N]	-	-	-	-	58800	59000	59000	59000	59000	59000	59000	58100	59000	59000
	Pro[kgf]	-	-	-	-	6000	6010	6010	6010	6010	6010	6010	5930	6010	6010
6195DB	P_1[kW]	11.9	10.6	9.00	8.09	6.84	5.81	4.92	-	-	-	-	-	-	-
	T_{OUT}[N•m]	7350	7580	7630	7910	7910	7960	7960	-	-	-	-	-	-	-
	T_{OUT}[kgf•m]	750	773	778	806	806	811	811	-	-	-	-	-	-	-
	Pro[N]	55400	59000	58200	58300	58300	59000	59000	-	-	-	-	-	-	-
	Pro[kgf]	5650	6010	5940	5940	5940	6010	6010	-	-	-	-	-	-	-
6205DA	P_1[kW]	-	-	-	-	-	-	5.17	4.27	3.83	2.95	2.64	**2.20**	**2.20**	**2.20**
	T_{OUT}[N•m]	-	-	-	-	-	-	8370	8080	8550	8280	8760	8300	9300	9230
	T_{OUT}[kgf•m]	-	-	-	-	-	-	853	823	872	844	893	846	948	941
	Pro[N]	-	-	-	-	-	-	84100	84100	84100	84100	84100	84100	84100	84100
	Pro[kgf]	-	-	-	-	-	-	8570	8570	8570	8570	8570	8570	8570	8570
6205DB	P_1[kW]	-	11.9	-	9.48	8.02	6.77	5.73	4.88	4.13	3.32	2.81	2.42	**2.20**	-
	T_{OUT}[N•m]	-	8560	-	9270	9270	9270	9270	9230	9230	9300	9300	9300	9300	-
	T_{OUT}[kgf•m]	-	872	-	945	945	945	945	941	941	948	948	948	948	-
	Pro[N]	-	84100	-	84100	84100	84100	84100	84100	84100	84100	84100	84100	84100	-
	Pro[kgf]	-	8570	-	8570	8570	8570	8570	8570	8570	8570	8570	8570	8570	-
6215DA	P_1[kW]	-	-	-	11.9	10.5	9.13	7.72	6.69	5.66	4.51	3.82	3.29	2.92	2.54
	T_{OUT}[N•m]	-	-	-	11700	12200	12500	12500	12700	12700	12700	12700	12700	12700	12700
	T_{OUT}[kgf•m]	-	-	-	1190	1240	1270	1270	1290	1290	1290	1290	1290	1290	1290
	Pro[N]	-	-	-	104000	104000	104000	104000	104000	104000	104000	104000	104000	104000	104000
	Pro[kgf]	-	-	-	10600	10600	10600	10600	10600	10600	10600	10600	10600	10600	10600
6215DB	P_1[kW]	-	15.9	-	12.4	10.5	-	-	-	-	-	-	-	-	-
	T_{OUT}[N•m]	-	11400	-	12200	12200	-	-	-	-	-	-	-	-	-
	T_{OUT}[kgf•m]	-	1160	-	1240	1240	-	-	-	-	-	-	-	-	-
	Pro[N]	-	104000	-	104000	104000	-	-	-	-	-	-	-	-	-
	Pro[kgf]	-	10600	-	10600	10600	-	-	-	-	-	-	-	-	-
6225DA	P_1[kW]	-	-	-	-	10.8	10.8	9.15	7.95	6.73	5.71	4.83	4.13	3.69	3.02
	T_{OUT}[N•m]	-	-	-	-	12500	14800	14800	15000	15000	16000	16000	15900	16000	15000
	T_{OUT}[kgf•m]	-	-	-	-	1270	1510	1510	1530	1530	1630	1630	1620	1630	1530
	Pro[N]	-	-	-	-	129000	137000	145000	145000	145000	145000	145000	145000	145000	145000
	Pro[kgf]	-	-	-	-	13200	14000	14700	14800	14800	14800	14800	14800	14800	14800
6225DB	P_1[kW]	-	18.8	-	14.8	12.5	10.8	-	-	-	-	-	-	-	-
	T_{OUT}[N•m]	-	13500	-	14500	14500	14800	-	-	-	-	-	-	-	-
	T_{OUT}[kgf•m]	-	1370	-	1480	1480	1510	-	-	-	-	-	-	-	-
	Pro[N]	-	113000	-	122000	129000	137000	-	-	-	-	-	-	-	-
	Pro[kgf]	-	11500	-	12500	13100	14000	-	-	-	-	-	-	-	-
6235DA	P_1[kW]	-	25.4	-	20.0	17.0	13.8	11.7	10.00	8.46	7.31	6.19	5.33	4.73	3.79
	T_{OUT}[N•m]	-	18200	-	19600	19600	18900	18900	18900	18900	20500	20500	20500	20500	18900
	T_{OUT}[kgf•m]	-	1860	-	2000	2000	1930	1930	1930	1930	2090	2090	2090	2090	1930
	Pro[N]	-	141000	-	151000	159000	171000	179000	179000	179000	179000	179000	179000	179000	179000
	Pro[kgf]	-	14300	-	15400	16200	17400	18200	18200	18200	18200	18200	18200	18200	18200
6235DB	P_1[kW]	-	26.1	-	20.0	-	-	-	-	-	-	-	-	-	-
	T_{OUT}[N•m]	-	18700	-	19600	-	-	-	-	-	-	-	-	-	-
	T_{OUT}[kgf•m]	-	1910	-	2000	-	-	-	-	-	-	-	-	-	-
	Pro[N]	-	141000	-	151000	-	-	-	-	-	-	-	-	-	-
	Pro[kgf]	-	14300	-	15400	-	-	-	-	-	-	-	-	-	-
Frame Size	Ratio [Z]	104	121	143	165	195	231	273	319	377	473	559	649	731	841
	n_2 [r/min]	13.9	12.0	10.1	8.79	7.44	6.28	5.31	4.55	3.85	3.07	2.59	2.23	1.98	1.72

Note: 1. Allowable radial load Pro is the value at the midpoint of the output shaft. Refer to pages F-11~12 when radial load is off the midpoint of output shaft and for checking thrust load.
2. Refer to pages F-15~16 for allowable radial load for input shaft.

Selection Tables 6000 Series Reducer

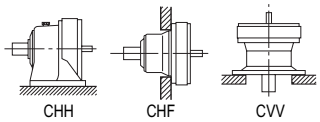

Input Speed	n_1 = 1450 r/min

1.45	1.16	0.980	0.784	0.702	0.572	0.476	0.417	0.327	0.282	0.235	0.192	n_2 [r/min]	Page of Dim.	Frame Size
1003	1247	1479	1849	2065	2537	3045	3481	4437	5133	6177	7569	Ratio [Z]		
-	-	-	-	-	-	-	-	-	-	-	-	P_1[kW]		
-	-	-	-	-	-	-	-	-	-	-	-	T_{OUT}[N•m]	CHH C-75	
-	-	-	-	-	-	-	-	-	-	-	-	T_{OUT}[kgf•m]	CHF C-80	**6185DB**
-	-	-	-	-	-	-	-	-	-	-	-	Pro[N]	CVV C-87	
-	-	-	-	-	-	-	-	-	-	-	-	Pro[kgf]		
1.07	0.863	**0.750**	**0.750**	**0.750**	**0.750**	**0.750**	**0.750**	**0.750**	**0.750**	**0.750**	**0.750**	P_1[kW]		
6380	6380	6380	6380	6380	6380	6380	6380	6380	6380	6380	6380	T_{OUT}[N•m]	CHH C-75	
650	650	650	650	650	650	650	650	650	650	650	650	T_{OUT}[kgf•m]	CHF C-80	**6190DA**
58600	59000	58900	59000	58600	58600	58900	58600	58900	58900	58900	58900	Pro[N]	CVV C-87	
5970	6010	6000	6010	5970	5970	6000	5970	6000	6000	6000	6000	Pro[kgf]		
-	-	-	-	-	-	-	-	-	-	-	-	P_1[kW]		
-	-	-	-	-	-	-	-	-	-	-	-	T_{OUT}[N•m]	CHH C-75	
-	-	-	-	-	-	-	-	-	-	-	-	T_{OUT}[kgf•m]	CHF C-80	**6190DB**
-	-	-	-	-	-	-	-	-	-	-	-	Pro[N]	CVV C-87	
-	-	-	-	-	-	-	-	-	-	-	-	Pro[kgf]		
1.34	1.08	0.908	**0.750**	**0.750**	**0.750**	**0.750**	**0.750**	**0.750**	**0.750**	**0.750**	**0.750**	P_1[kW]		
7960	7960	7960	7960	7960	7960	7960	7960	7960	7960	7960	7960	T_{OUT}[N•m]	CHH C-75	
811	811	811	811	811	811	811	811	811	811	811	811	T_{OUT}[kgf•m]	CHF C-80	**6195DA**
58100	59000	58400	59000	58100	58100	58400	58100	58400	58400	58400	58400	Pro[N]	CVV C-87	
5930	6010	5950	6010	5930	5930	5950	5930	5950	5950	5950	5950	Pro[kgf]		
-	-	-	-	-	-	-	-	-	-	-	-	P_1[kW]		
-	-	-	-	-	-	-	-	-	-	-	-	T_{OUT}[N•m]	CHH C-75	
-	-	-	-	-	-	-	-	-	-	-	-	T_{OUT}[kgf•m]	CHF C-80	**6195DB**
-	-	-	-	-	-	-	-	-	-	-	-	Pro[N]	CVV C-87	
-	-	-	-	-	-	-	-	-	-	-	-	Pro[kgf]		
2.20	1.50	1.50	1.50	1.50	0.750	0.750	0.750	0.750	0.750	0.750	0.750	P_1[kW]		
9300	9300	8760	9300	9300	9300	8760	9300	8760	9300	8760	8760	T_{OUT}[N•m]	CHH C-75	
948	948	893	948	948	948	893	948	893	948	893	893	T_{OUT}[kgf•m]	CHF C-80	**6205DA**
84100	84100	84100	84100	84100	84100	84100	84100	84100	84100	84100	84100	Pro[N]	CVV C-87	
8570	8570	8570	8570	8570	8570	8570	8570	8570	8570	8570	8570	Pro[kgf]		
2.20	-	**1.50**	-	-	-	-	-	-	-	-	-	P_1[kW]		
9300	-	8760	-	-	-	-	-	-	-	-	-	T_{OUT}[N•m]	CHH C-75	
948	-	893	-	-	-	-	-	-	-	-	-	T_{OUT}[kgf•m]	CHF C-80	**6205DB**
84100	-	84100	-	-	-	-	-	-	-	-	-	Pro[N]	CVV C-87	
8570	-	8570	-	-	-	-	-	-	-	-	-	Pro[kgf]		
2.20	**2.20**	**1.50**	**1.50**	**1.50**	**1.50**	**1.50**	**1.50**	**1.50**	**1.50**	**1.50**	**1.50**	P_1[kW]		
12700	12700	11300	12700	12700	12700	11300	12700	11300	12700	11300	11300	T_{OUT}[N•m]	CHH C-75	
1290	1290	1150	1290	1290	1290	1150	1290	1150	1290	1150	1150	T_{OUT}[kgf•m]	CHF C-80	**6215DA**
104000	104000	104000	104000	104000	104000	104000	104000	104000	104000	104000	104000	Pro[N]	CVV C-87	
10600	10600	10600	10600	10600	10600	10600	10600	10600	10600	10600	10600	Pro[kgf]		
-	-	-	-	-	-	-	-	-	-	-	-	P_1[kW]		
-	-	-	-	-	-	-	-	-	-	-	-	T_{OUT}[N•m]	CHH C-75	
-	-	-	-	-	-	-	-	-	-	-	-	T_{OUT}[kgf•m]	CHF C-80	**6215DB**
-	-	-	-	-	-	-	-	-	-	-	-	Pro[N]	CVV C-87	
-	-	-	-	-	-	-	-	-	-	-	-	Pro[kgf]		
2.67	**2.20**	**2.20**	**1.50**	**1.50**	**1.50**	**1.50**	**1.50**	**1.50**	**1.50**	**1.50**	**1.50**	P_1[kW]		
15900	16000	15100	16000	15900	15900	15100	15900	15100	15900	15100	15100	T_{OUT}[N•m]	CHH C-75	
1620	1630	1540	1630	1620	1620	1540	1620	1540	1620	1540	1540	T_{OUT}[kgf•m]	CHF C-80	**6225DA**
145000	145000	145000	145000	145000	145000	145000	145000	145000	145000	145000	145000	Pro[N]	CVV C-87	
14800	14800	14800	14800	14800	14800	14800	14800	14800	14800	14800	14800	Pro[kgf]		
-	-	-	-	-	-	-	-	-	-	-	-	P_1[kW]		
-	-	-	-	-	-	-	-	-	-	-	-	T_{OUT}[N•m]	CHH C-75	
-	-	-	-	-	-	-	-	-	-	-	-	T_{OUT}[kgf•m]	CHF C-80	**6225DB**
-	-	-	-	-	-	-	-	-	-	-	-	Pro[N]	CVV C-87	
-	-	-	-	-	-	-	-	-	-	-	-	Pro[kgf]		
3.45	2.77	**2.20**	**2.20**	**2.20**	**2.20**	**2.20**	**2.20**	**2.20**	**2.20**	**2.20**	**2.20**	P_1[kW]		
20500	20500	17200	20500	20500	20500	17200	20500	17200	20500	17200	17200	T_{OUT}[N•m]	CHH C-75	
2090	2090	1750	2090	2090	2090	1750	2090	1750	2090	1750	1750	T_{OUT}[kgf•m]	CHF C-80	**6235DA**
179000	179000	179000	179000	179000	179000	179000	179000	179000	179000	179000	179000	Pro[N]	CVV C-87	
18200	18200	18200	18200	18200	18200	18200	18200	18200	18200	18200	18200	Pro[kgf]		
-	-	-	-	-	-	-	-	-	-	-	-	P_1[kW]		
-	-	-	-	-	-	-	-	-	-	-	-	T_{OUT}[N•m]	CHH C-75	
-	-	-	-	-	-	-	-	-	-	-	-	T_{OUT}[kgf•m]	CHF C-80	**6235DB**
-	-	-	-	-	-	-	-	-	-	-	-	Pro[N]	CVV C-87	
-	-	-	-	-	-	-	-	-	-	-	-	Pro[kgf]		
1003	1247	1479	1849	2065	2537	3045	3481	4437	5133	6177	7569	Ratio [Z]	Page of Dim.	Frame Size
1.45	1.16	0.980	0.784	0.702	0.572	0.476	0.417	0.327	0.282	0.235	0.192	n_2 [r/min]		

Note: 3. Necessary input power for starting is printed in bold face. Do not exceed allowable output torque after startup.

Selection Tables 6000 Series Reducer

Double Reduction Ratio 104,121 ~ 7569 Frame Size: 6245DA ~ 6275DA

Input Speed	n_1 = 1450 r/min	n_1: Input Speed [r/min]	T_{out}: Allowable output torque [N·m, kgf·m]
		n_2: Output Speed [r/min]	Pro: Allowable output shaft radial load [N, kgf]
		P_1: Allowable input power [kW]	*Consult us for Pro of CNF and CHF type.

Frame Size	n_2 [r/min]	13.9	12.0	10.1	8.79	7.44	6.28	5.31	4.55	3.85	3.07	2.59	2.23	1.98	1.72
	Ratio [Z]	104	121	143	165	195	231	273	319	377	473	559	649	731	841
6245DA	P_1[kW]	-	-	-	25.4	22.7	18.8	15.9	13.6	11.5	9.20	7.79	6.71	5.95	5.18
	T_{OUT}[N•m]	-	-	-	24800	26200	25800	25800	25800	25800	25800	25800	25800	25800	25800
	T_{OUT}[kgf•m]	-	-	-	2530	2680	2630	2630	2630	2630	2630	2630	2630	2630	2630
	Pro[N]	-	-	-	168000	177000	189000	199000	208000	208000	208000	208000	208000	208000	208000
	Pro[kgf]	-	-	-	17100	18000	19300	20300	21200	21200	21200	21200	21200	21200	21200
6245DB	P_1[kW]	-	28.6	-	26.8	22.7	18.8	-	-	-	-	-	-	-	-
	T_{OUT}[N•m]	-	20500	-	26200	26200	25800	-	-	-	-	-	-	-	-
	T_{OUT}[kgf•m]	-	2090	-	2680	2680	2630	-	-	-	-	-	-	-	-
	Pro[N]	-	156000	-	168000	177000	189000	-	-	-	-	-	-	-	-
	Pro[kgf]	-	15900	-	17100	18000	19300	-	-	-	-	-	-	-	-
6255DA	P_1[kW]	-	31.8	-	31.8	27.0	22.6	19.2	17.2	14.5	12.3	10.4	8.97	7.96	6.51
	T_{OUT}[N•m]	-	22800	-	31100	31200	31000	31000	32500	32500	34500	34500	34500	34500	32500
	T_{OUT}[kgf•m]	-	2330	-	3170	3180	3160	3160	3310	3310	3520	3520	3520	3520	3310
	Pro[N]	-	192000	-	206000	216000	231000	243000	255000	258000	258000	258000	258000	258000	258000
	Pro[kgf]	-	19600	-	21000	22100	23500	24700	26000	26300	26300	26300	26300	26300	26300
6255DB	P_1[kW]		38.3	-	31.9	27.0	-	-	-	-	-	-	-	-	-
	T_{OUT}[N•m]	-	27500	-	31200	31200	-	-	-	-	-	-	-	-	-
	T_{OUT}[kgf•m]	-	2800	-	3180	3180	-	-	-	-	-	-	-	-	-
	Pro[N]	-	191000	-	206000	216000	-	-	-	-	-	-	-	-	-
	Pro[kgf]	-	19500	-	21000	22100	-	-	-	-	-	-	-	-	-
6265DA	P_1[kW]	-	43.7	-	44.7	37.8	33.6	28.4	24.3	20.6	16.4	13.9	12.0	10.6	9.23
	T_{OUT}[N•m]	-	31300	-	43700	43700	46000	46000	46000	46000	46000	46000	46000	46000	46000
	T_{OUT}[kgf•m]	-	3190	-	4460	4460	4690	4690	4690	4690	4690	4690	4690	4690	4690
	Pro[N]	-	234000	-	250000	263000	276000	276000	276000	276000	276000	276000	276000	276000	276000
	Pro[kgf]	-	23800	-	25500	26800	28100	28100	28100	28100	28100	28100	28100	28100	28100
6275DA	P_1[kW]	-	-	-	-	-	-	-	36.1	30.5	24.3	20.6	17.7	15.7	13.7
	T_{OUT}[N•m]	-	-	-	-	-	-	-	68200	68200	68200	68200	68200	68200	68200
	T_{OUT}[kgf•m]	-	-	-	-	-	-	-	6950	6950	6950	6950	6950	6950	6950
	Pro[N]	-	-	-	-	-	-	-	248000	248000	248000	248000	248000	248000	248000
	Pro[kgf]	-	-	-	-	-	-	-	25300	25300	25300	25300	25300	25300	25300
Frame Size	Ratio [Z]	104	121	143	165	195	231	273	319	377	473	559	649	731	841
	n_2 [r/min]	13.9	12.0	10.1	8.79	7.44	6.28	5.31	4.55	3.85	3.07	2.59	2.23	1.98	1.72

Note: 1. Allowable radial load Pro is the value at the midpoint of the output shaft. Refer to pages F-11~12 when radial load is off the midpoint of output shaft and for checking thrust load.
2. Refer to pages F-15~16 for allowable radial load for input shaft.

Selection Tables 6000 Series Reducer

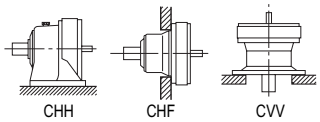

Input Speed	n_1 = 1450 r/min

1.45	1.16	0.980	0.784	0.702	0.572	0.476	0.417	0.327	0.282	0.235	0.192	n_2 [r/min]	Page of Dim.	Frame Size
1003	1247	1479	1849	2065	2537	3045	3481	4437	5133	6177	7569	Ratio [Z]		
4.34	3.49	2.58	2.35	**2.20**	**2.20**	**2.20**	**2.20**	**2.20**	**2.20**	**2.20**	**2.20**	P_1[kW]		
25800	25800	22600	25800	25800	25800	22600	25800	22600	25800	22600	22600	T_{OUT}[N•m]	CHH C-75	
2630	2630	2310	2630	2630	2630	2310	2630	2310	2630	2310	2310	T_{OUT}[kgf•m]	CHF C-80	**6245DA**
208000	208000	208000	208000	208000	208000	208000	208000	208000	208000	208000	208000	Pro[N]	CVV C-87	
21200	21200	21200	21200	21200	21200	21200	21200	21200	21200	21200	21200	Pro[kgf]		
-	-	-	-	-	-	-	-	-	-	-	-	P_1[kW]		
-	-	-	-	-	-	-	-	-	-	-	-	T_{OUT}[N•m]	CHH C-75	
-	-	-	-	-	-	-	-	-	-	-	-	T_{OUT}[kgf•m]	CHF C-80	**6245DB**
-	-	-	-	-	-	-	-	-	-	-	-	Pro[N]	CVV C-87	
-	-	-	-	-	-	-	-	-	-	-	-	Pro[kgf]		
5.80	4.67	**3.70**	**3.70**	**3.70**	**3.70**	**3.70**	**3.70**	**3.70**	**3.70**	**3.70**	**3.70**	P_1[kW]		
34500	34500	31000	34500	34500	34500	31000	34500	31000	34500	31000	31000	T_{OUT}[N•m]	CHH C-75	
3520	3520	3160	3520	3520	3520	3160	3520	3160	3520	3160	3160	T_{OUT}[kgf•m]	CHF C-80	**6255DA**
258000	258000	258000	258000	258000	258000	258000	258000	258000	258000	258000	258000	Pro[N]	CVV C-87	
26300	26300	26300	26300	26300	26300	26300	26300	26300	26300	26300	26300	Pro[kgf]		
-	-	-	-	-	-	-	-	-	-	-	-	P_1[kW]		
-	-	-	-	-	-	-	-	-	-	-	-	T_{OUT}[N•m]	CHH C-75	
-	-	-	-	-	-	-	-	-	-	-	-	T_{OUT}[kgf•m]	CHF C-80	**6255DB**
-	-	-	-	-	-	-	-	-	-	-	-	Pro[N]	CVV C-87	
-	-	-	-	-	-	-	-	-	-	-	-	Pro[kgf]		
7.74	6.22	**5.50**	**5.50**	**5.50**	**5.50**	**5.50**	**5.50**	**5.50**	**5.50**	**5.50**	**5.50**	P_1[kW]		
46000	46000	44000	46000	46000	46000	44000	46000	44000	46000	44000	44000	T_{OUT}[N•m]	CHH C-75	
4690	4690	4490	4690	4690	4690	4490	4690	4490	4690	4490	4490	T_{OUT}[kgf•m]	CHF C-80	**6265DA**
276000	276000	276000	276000	276000	276000	276000	276000	276000	276000	276000	276000	Pro[N]	CVV C-87	
28100	28100	28100	28100	28100	28100	28100	28100	28100	28100	28100	28100	Pro[kgf]		
11.5	9.23	7.78	**7.50**	**7.50**	**7.50**	**7.50**	**7.50**	**7.50**	**7.50**	**7.50**	**7.50**	P_1[kW]		
68200	68200	68200	68200	68200	68200	68200	68200	68200	68200	68200	68200	T_{OUT}[N•m]	CHH C-75	
6950	6950	6950	6950	6950	6950	6950	6950	6950	6950	6950	6950	T_{OUT}[kgf•m]		**6275DA**
248000	248000	245000	248000	248000	248000	245000	248000	245000	245000	245000	245000	Pro[N]	CVV C-87	
25300	25300	25000	25300	25300	25300	25000	25300	25000	25000	25000	25000	Pro[kgf]		
1003	1247	1479	1849	2065	2537	3045	3481	4437	5133	6177	7569	Ratio [Z]	Page of Dim.	Frame Size
1.45	1.16	0.980	0.784	0.702	0.572	0.476	0.417	0.327	0.282	0.235	0.192	n_2 [r/min]		

Note: 3. Necessary input power for starting is printed in bold face. Do not exceed allowable output torque after startup.

Selection Tables 6000 Series Reducer

Double Reduction Ratio 104,121 ~ 7569 Frame Size: 6060DA ~ 6130DA

Input Speed	n_1 = 1750 r/min	n_1: Input Speed [r/min]	T_{out}: Allowable output torque [N·m, kgf·m]
		n_2: Output Speed [r/min]	Pro: Allowable output shaft radial load [N, kgf]
		P_1: Allowable input power [kW]	*Consult us for Pro of CNF and CHF type.

Frame Size	n_2 [r/min]	16.8	14.5	12.2	10.6	8.97	7.58	6.41	5.49	4.64	3.70	3.13	2.70	2.39	2.08
	Ratio [Z]	104	121	143	165	195	231	273	319	377	473	559	649	731	841
6060DA	P_1[kW]	**0.100**	**0.100**	**0.100**	**0.100**	**0.100**	**0.100**	**0.100**	**0.100**	**0.100**	**0.100**	**0.100**	-	**0.100**	**0.100**
	T_{OUT}[N•m]	24.0	24.0	24.0	24.0	24.0	24.0	24.0	24.0	24.0	24.0	24.0	-	24.0	24.0
	T_{OUT}[kgf•m]	2.45	2.45	2.45	2.45	2.45	2.45	2.45	2.45	2.45	2.45	2.45	-	2.45	2.45
	Pro[N]	1180	1180	1180	1180	1180	1180	1180	1180	1180	1180	1180	-	1180	1180
	Pro[kgf]	120	120	120	120	120	120	120	120	120	120	120	-	120	120
6065DA	P_1[kW]	**0.100**	**0.100**	**0.100**	**0.100**	**0.100**	**0.100**	**0.100**	**0.100**	**0.100**	**0.100**	**0.100**	-	**0.100**	**0.100**
	T_{OUT}[N•m]	30.0	30.0	30.0	30.0	30.0	30.0	30.0	30.0	30.0	30.0	30.0	-	30.0	30.0
	T_{OUT}[kgf•m]	3.06	3.06	3.06	3.06	3.06	3.06	3.06	3.06	3.06	3.06	3.06	-	3.06	3.06
	Pro[N]	1180	1140	1180	1180	1180	1180	1180	1180	1180	1180	1180	-	1180	1180
	Pro[kgf]	120	116	120	120	120	120	120	120	120	120	120	-	120	120
6070DA	P_1[kW]	**0.100**	**0.100**	**0.100**	**0.100**	**0.100**	**0.100**	**0.100**	**0.100**	**0.100**	**0.100**	**0.100**	**0.100**	**0.100**	**0.100**
	T_{OUT}[N•m]	45.0	45.0	45.0	45.0	45.0	45.0	45.0	45.0	45.0	45.0	45.0	45.0	45.0	45.0
	T_{OUT}[kgf•m]	4.59	4.59	4.59	4.59	4.59	4.59	4.59	4.59	4.59	4.59	4.59	4.59	4.59	4.59
	Pro[N]	1770	1770	1770	1770	1770	1770	1770	1770	1770	1770	1770	1770	1770	1770
	Pro[kgf]	180	180	180	180	180	180	180	180	180	180	180	180	180	180
6075DA	P_1[kW]	0.117	**0.100**	**0.100**	**0.100**	**0.100**	**0.100**	**0.100**	**0.100**	**0.100**	**0.100**	**0.100**	**0.100**	**0.100**	**0.100**
	T_{OUT}[N•m]	60.0	50.8	60.0	60.0	60.0	60.0	60.0	60.0	60.0	60.0	60.0	57.4	60.0	60.0
	T_{OUT}[kgf•m]	6.12	5.18	6.12	6.12	6.12	6.12	6.12	6.12	6.12	6.12	6.12	5.85	6.12	6.12
	Pro[N]	1770	1770	1770	1770	1770	1770	1770	1770	1770	1660	1660	1580	1660	1770
	Pro[kgf]	180	180	180	180	180	180	180	180	180	169	169	161	169	180
6090DA	P_1[kW]	0.294	0.252	0.214	0.185	0.157	0.132	0.112	**0.100**	**0.100**	**0.100**	**0.100**	**0.100**	**0.100**	**0.100**
	T_{OUT}[N•m]	150	150	150	150	150	150	150	150	150	150	150	146	150	150
	T_{OUT}[kgf•m]	15.3	15.3	15.3	15.3	15.3	15.3	15.3	15.3	15.3	15.3	15.3	14.9	15.3	15.3
	Pro[N]	3340	3340	3340	3340	3340	3340	3340	3290	3290	3310	3310	3300	3310	3290
	Pro[kgf]	340	340	340	340	340	340	340	336	336	338	338	336	338	336
6095DA	P_1[kW]	0.354	0.270	0.261	0.247	0.209	0.176	0.149	0.128	0.108	**0.100**	**0.100**	-	**0.100**	**0.100**
	T_{OUT}[N•m]	181	160	183	200	200	200	200	200	200	200	200	-	200	200
	T_{OUT}[kgf•m]	18.4	16.4	18.7	20.4	20.4	20.4	20.4	20.4	20.4	20.4	20.4	-	20.4	20.4
	Pro[N]	3340	3340	3340	3340	3340	3340	3340	3200	3200	3220	3220	-	3220	3200
	Pro[kgf]	340	340	340	340	340	340	340	326	326	328	328	-	328	326
6100DA	P_1[kW]	0.429	0.421	0.356	0.308	0.261	0.220	0.186	0.160	0.135	0.108	**0.100**	**0.100**	**0.100**	**0.100**
	T_{OUT}[N•m]	219	250	250	250	250	250	250	250	250	250	250	250	250	250
	T_{OUT}[kgf•m]	22.4	25.5	25.5	25.5	25.5	25.5	25.5	25.5	25.5	25.5	25.5	25.5	25.5	25.5
	Pro[N]	5400	5400	5400	5400	5400	5400	5400	5400	5400	5400	5400	5400	5400	5400
	Pro[kgf]	550	550	550	550	550	550	550	550	550	550	550	550	550	550
6105DA	P_1[kW]	0.429	0.429	0.427	0.370	0.313	0.264	0.224	0.191	0.162	0.129	0.109	**0.100**	**0.100**	**0.100**
	T_{OUT}[N•m]	219	255	300	300	300	300	300	300	300	300	300	296	300	300
	T_{OUT}[kgf•m]	22.4	26.0	30.6	30.6	30.6	30.6	30.6	30.6	30.6	30.6	30.6	30.2	30.6	30.6
	Pro[N]	5400	5400	5400	5400	5400	5400	5400	5400	5400	5400	5400	5090	5400	5400
	Pro[kgf]	550	550	550	550	550	550	550	550	550	550	550	519	550	550
6120DA	P_1[kW]	-	-	0.429	0.429	0.429	0.429	0.389	0.332	0.281	0.226	0.191	0.165	0.146	0.126
	T_{OUT}[N•m]	-	-	302	348	411	487	522	520	520	525	525	525	525	520
	T_{OUT}[kgf•m]	-	-	30.7	35.5	41.9	49.7	53.2	53.0	53.0	53.5	53.5	53.5	53.5	53.0
	Pro[N]	-	-	9810	9810	9810	9810	9810	9810	9810	9810	9810	9810	9810	9810
	Pro[kgf]	-	-	1000	1000	1000	1000	1000	1000	1000	1000	1000	1000	1000	1000
6120DB	P_1[kW]	1.03	0.883	0.748	0.648	0.548	0.460	-	-	-	-	-	-	-	-
	T_{OUT}[N•m]	525	525	525	525	525	522	-	-	-	-	-	-	-	-
	T_{OUT}[kgf•m]	53.5	53.5	53.5	53.5	53.5	53.2	-	-	-	-	-	-	-	-
	Pro[N]	9810	9810	9810	9810	9810	9810	-	-	-	-	-	-	-	-
	Pro[kgf]	1000	1000	1000	1000	1000	1000	-	-	-	-	-	-	-	-
6125DA	P_1[kW]	-	-	-	-	-	0.429	0.429	0.402	0.340	0.271	0.229	0.198	0.175	0.153
	T_{OUT}[N•m]	-	-	-	-	-	487	576	630	630	630	630	630	630	630
	T_{OUT}[kgf•m]	-	-	-	-	-	49.7	58.7	64.2	64.2	64.2	64.2	64.2	64.2	64.2
	Pro[N]	-	-	-	-	-	9810	9810	9810	9810	9810	9810	9810	9810	9810
	Pro[kgf]	-	-	-	-	-	1000	1000	1000	1000	1000	1000	1000	1000	1000
6125DB	P_1[kW]	1.23	1.05	0.897	0.777	0.658	0.555	0.470	0.402	-	-	-	-	-	-
	T_{OUT}[N•m]	630	622	630	630	630	630	630	630	-	-	-	-	-	-
	T_{OUT}[kgf•m]	64.2	63.4	64.2	64.2	64.2	64.2	64.2	64.2	-	-	-	-	-	-
	Pro[N]	9810	9810	9810	9810	9810	9810	9810	9810	-	-	-	-	-	-
	Pro[kgf]	1000	1000	1000	1000	1000	1000	1000	1000	-	-	-	-	-	-
6130DA	P_1[kW]	-	-	-	-	-	-	0.429	0.429	0.421	0.336	0.284	0.286	0.217	**0.200**
	T_{OUT}[N•m]	-	-	-	-	-	-	576	673	780	780	780	912	780	780
	T_{OUT}[kgf•m]	-	-	-	-	-	-	58.7	68.6	79.5	79.5	79.5	93.0	79.5	79.5
	Pro[N]	-	-	-	-	-	-	14700	14700	14700	14700	14700	14700	14700	14700
	Pro[kgf]	-	-	-	-	-	-	1500	1500	1500	1500	1500	1500	1500	1500
Frame Size	Ratio [Z]	104	121	143	165	195	231	273	319	377	473	559	649	731	841
	n_2 [r/min]	16.8	14.5	12.2	10.6	8.97	7.58	6.41	5.49	4.64	3.70	3.13	2.70	2.39	2.08

Note: 1. Allowable radial load Pro is the value at the midpoint of the output shaft. Refer to pages F-11~12 when radial load is off the midpoint of output shaft and for checking thrust load.
2. Refer to pages F-15~16 for allowable radial load for input shaft.

Selection Tables 6000 Series Reducer

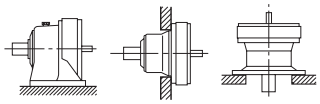

Input Speed	n_1 = 1750 r/min

1.74	1.40	1.18	0.946	0.847	0.690	0.575	0.503	0.394	0.341	0.283	0.231	n_2 [r/min]	Page of Dim.	Frame Size
1003	1247	1479	1849	2065	2537	3045	3481	4437	5133	6177	7569	Ratio [Z]		
-	**0.100**	-	**0.100**	-	-	-	-	-	-	-	-	P_1[kW]		
-	24.0	-	24.0	-	-	-	-	-	-	-	-	T_{OUT}[N•m]	CNH C-73	
-	2.45	-	2.45	-	-	-	-	-	-	-	-	T_{OUT}[kgf•m]	CNF C-78	**6060DA**
-	1180	-	1180	-	-	-	-	-	-	-	-	Pro[N]	CNV C-85	
-	120	-	120	-	-	-	-	-	-	-	-	Pro[kgf]		
-	**0.100**	-	**0.100**	-	-	-	-	-	-	-	-	P_1[kW]		
-	30.0	-	30.0	-	-	-	-	-	-	-	-	T_{OUT}[N•m]	CNH C-73	
-	3.06	-	3.06	-	-	-	-	-	-	-	-	T_{OUT}[kgf•m]	CNF C-78	**6065DA**
-	1180	-	1180	-	-	-	-	-	-	-	-	Pro[N]	CNV C-85	
-	120	-	120	-	-	-	-	-	-	-	-	Pro[kgf]		
0.100	**0.100**	-	**0.100**	**0.100**	**0.100**	-	-	-	-	-	-	P_1[kW]		
45.0	45.0	-	45.0	45.0	45.0	-	-	-	-	-	-	T_{OUT}[N•m]	CNH C-73	
4.59	4.59	-	4.59	4.59	4.59	-	-	-	-	-	-	T_{OUT}[kgf•m]	CNF C-78	**6070DA**
1770	1770	-	1770	1770	1770	-	-	-	-	-	-	Pro[N]	CNV C-85	
180	180	-	180	180	180	-	-	-	-	-	-	Pro[kgf]		
0.100	**0.100**	-	**0.100**	**0.100**	**0.100**	-	-	-	-	-	-	P_1[kW]		
57.4	60.0	-	60.0	57.4	57.4	-	-	-	-	-	-	T_{OUT}[N•m]	CNH C-73	
5.85	6.12	-	6.12	5.85	5.85	-	-	-	-	-	-	T_{OUT}[kgf•m]	CNF C-78	**6075DA**
1580	1660	-	1660	1580	1580	-	-	-	-	-	-	Pro[N]	CNV C-85	
161	169	-	169	161	161	-	-	-	-	-	-	Pro[kgf]		
0.100	**0.100**	**0.100**	**0.100**	**0.100**	**0.100**	**0.100**	**0.100**	**0.100**	**0.100**	-	-	P_1[kW]		
146	150	150	150	146	146	150	146	150	150	-	-	T_{OUT}[N•m]	CNH C-73	
14.9	15.3	15.3	15.3	14.9	14.9	15.3	14.9	15.3	15.3	-	-	T_{OUT}[kgf•m]	CNF C-78	**6090DA**
3300	3310	3310	3310	3300	3300	3310	3300	3310	3310	-	-	Pro[N]	CNV C-85	
336	338	338	338	336	336	338	336	338	338	-	-	Pro[kgf]		
-	**0.100**	**0.100**	**0.100**	-	-	**0.100**	-	**0.100**	**0.100**	-	-	P_1[kW]		
-	200	193	200	-	-	192	-	192	192	-	-	T_{OUT}[N•m]	CNH C-73	
-	20.4	19.6	20.4	-	-	19.6	-	19.6	19.6	-	-	T_{OUT}[kgf•m]	CNF C-78	**6095DA**
-	3220	3240	3220	-	-	3240	-	3240	3240	-	-	Pro[N]	CNV C-85	
-	328	330	328	-	-	330	-	330	330	-	-	Pro[kgf]		
0.100	**0.100**	**0.100**	**0.100**	**0.100**	**0.100**	**0.100**	**0.100**	**0.100**	**0.100**	-	-	P_1[kW]		
250	250	250	250	250	250	250	250	250	250	-	-	T_{OUT}[N•m]	CNH C-73	
25.5	25.5	25.5	25.5	25.5	25.5	25.5	25.5	25.5	25.5	-	-	T_{OUT}[kgf•m]	CNF C-78	**6100DA**
5400	5400	5400	5400	5400	5400	5400	5400	5400	5400	-	-	Pro[N]	CNV C-85	
550	550	550	550	550	550	550	550	550	550	-	-	Pro[kgf]		
0.100	**0.100**	**0.100**	**0.100**	**0.100**	**0.100**	**0.100**	**0.100**	**0.100**	**0.100**	-	-	P_1[kW]		
296	300	300	300	296	296	300	296	300	300	-	-	T_{OUT}[N•m]	CNH C-73	
30.2	30.6	30.6	30.6	30.2	30.2	30.6	30.2	30.6	30.6	-	-	T_{OUT}[kgf•m]	CNF C-78	**6105DA**
5090	5400	4780	5400	5090	5090	4780	5090	4780	4780	-	-	Pro[N]	CNV C-85	
519	550	488	550	519	519	488	519	488	488	-	-	Pro[kgf]		
0.107	**0.100**	**0.100**	**0.100**	**0.100**	**0.100**	**0.100**	**0.100**	**0.100**	**0.100**	-	-	P_1[kW]		
525	525	525	525	525	525	525	525	525	525	-	-	T_{OUT}[N•m]	CNH C-73	
53.5	53.5	53.5	53.5	53.5	53.5	53.5	53.5	53.5	53.5	-	-	T_{OUT}[kgf•m]	CNF C-78	**6120DA**
9810	9810	9780	9810	9810	9810	9780	9810	9780	9780	-	-	Pro[N]	CNV C-85	
1000	1000	997	1000	1000	1000	997	1000	997	997	-	-	Pro[kgf]		
-	-	-	-	-	-	-	-	-	-	**0.100**	**0.100**	P_1[kW]		
-	-	-	-	-	-	-	-	-	-	525	525	T_{OUT}[N•m]	CNH C-73	
-	-	-	-	-	-	-	-	-	-	53.5	53.5	T_{OUT}[kgf•m]	CNF C-78	**6120DB**
-	-	-	-	-	-	-	-	-	-	9780	9780	Pro[N]	CNV C-85	
-	-	-	-	-	-	-	-	-	-	997	997	Pro[kgf]		
0.128	0.103	**0.100**	**0.100**	**0.100**	**0.100**	**0.100**	**0.100**	**0.100**	**0.100**	-	-	P_1[kW]		
630	630	630	630	630	630	630	630	630	630	-	-	T_{OUT}[N•m]	CNH C-73	
64.2	64.2	64.2	64.2	64.2	64.2	64.2	64.2	64.2	64.2	-	-	T_{OUT}[kgf•m]	CNF C-78	**6125DA**
9810	9810	9560	9810	9810	9810	9560	9810	9560	9560	-	-	Pro[N]	CNV C-85	
1000	1000	974	1000	1000	1000	974	1000	974	974	-	-	Pro[kgf]		
-	-	-	-	-	-	-	-	-	-	**0.100**	**0.100**	P_1[kW]		
-	-	-	-	-	-	-	-	-	-	630	630	T_{OUT}[N•m]	CNH C-73	
-	-	-	-	-	-	-	-	-	-	64.2	64.2	T_{OUT}[kgf•m]	CNF C-78	**6125DB**
-	-	-	-	-	-	-	-	-	-	9560	9560	Pro[N]	CNV C-85	
-	-	-	-	-	-	-	-	-	-	974	974	Pro[kgf]		
0.200	**0.200**	**0.200**	**0.200**	**0.200**	**0.200**	**0.200**	**0.200**	**0.200**	**0.200**	-	-	P_1[kW]		
912	780	848	780	912	912	848	912	848	848	-	-	T_{OUT}[N•m]	CHH C-74	
93.0	79.5	86.5	79.5	93.0	93.0	86.5	93.0	86.5	86.5	-	-	T_{OUT}[kgf•m]	CHF C-79	**6130DA**
14700	14700	14700	14700	14700	14700	14700	14700	14700	14700	-	-	Pro[N]	CVV C-86	
1500	1500	1500	1500	1500	1500	1500	1500	1500	1500	-	-	Pro[kgf]		
1003	1247	1479	1849	2065	2537	3045	3481	4437	5133	6177	7569	Ratio [Z]	Page of Dim.	Frame Size
1.74	1.40	1.18	0.946	0.847	0.690	0.575	0.503	0.394	0.341	.0283	0.231	n_2 [r/min]		

Note: 3. Necessary input power for starting is printed in bold face. Do not exceed allowable output torque after startup.

Selection Tables 6000 Series Reducer

Double Reduction Ratio 104,121 ~ 7569 Frame Size: 6130DB ~ 6160DB

Input Speed	n_1 = 1750 r/min	n_1: Input Speed [r/min]	T_{out}: Allowable output torque [N·m, kgf·m]
		n_2: Output Speed [r/min]	Pro: Allowable output shaft radial load [N, kgf]
		P_1: Allowable input power [kW]	*Consult us for Pro of CNF and CHF type.

Frame Size	n_2 [r/min]	16.8	14.5	12.2	10.6	8.97	7.58	6.41	5.49	4.64	3.70	3.13	2.70	2.39	2.08
	Ratio [Z]	104	121	143	165	195	231	273	319	377	473	559	649	731	841
6130DB	P_1[kW]	1.53	1.31	1.11	0.963	0.814	0.688	0.582	0.498	0.421	-	-	-	-	-
	T_{OUT}[N•m]	780	780	780	780	780	780	780	780	780	-	-	-	-	-
	T_{OUT}[kgf•m]	79.5	79.5	79.5	79.5	79.5	79.5	79.5	79.5	79.5	-	-	-	-	-
	Pro[N]	14700	14700	14700	14700	14700	14700	14700	14700	14700	-	-	-	-	-
	Pro[kgf]	1500	1500	1500	1500	1500	1500	1500	1500	1500	-	-	-	-	-
6130DC	P_1[kW]	1.53	-	-	-	-	-	-	-	-	-	-	-	-	-
	T_{OUT}[N•m]	780	-	-	-	-	-	-	-	-	-	-	-	-	-
	T_{OUT}[kgf•m]	79.5	-	-	-	-	-	-	-	-	-	-	-	-	-
	Pro[N]	14700	-	-	-	-	-	-	-	-	-	-	-	-	-
	Pro[kgf]	1500	-	-	-	-	-	-	-	-	-	-	-	-	-
6135DA	P_1[kW]	-	-	-	-	-	-	-	0.429	0.429	0.405	0.342	0.329	0.262	0.228
	T_{OUT}[N•m]	-	-	-	-	-	-	-	673	795	940	940	1050	940	940
	T_{OUT}[kgf•m]	-	-	-	-	-	-	-	68.6	81.1	95.8	95.8	107	95.8	95.8
	Pro[N]	-	-	-	-	-	-	-	14700	14700	14700	14700	14700	14700	14700
	Pro[kgf]	-	-	-	-	-	-	-	1500	1500	1500	1500	1500	1500	1500
6135DB	P_1[kW]	1.60	1.58	1.34	1.16	0.981	0.829	0.701	0.600	0.508	0.405	-	-	-	-
	T_{OUT}[N•m]	817	940	940	940	940	940	940	940	940	940	-	-	-	-
	T_{OUT}[kgf•m]	83.3	95.8	95.8	95.8	95.8	95.8	95.8	95.8	95.8	95.8	-	-	-	-
	Pro[N]	14700	14700	14700	14700	14700	14700	14700	14700	14700	14700	-	-	-	-
	Pro[kgf]	1500	1500	1500	1500	1500	1500	1500	1500	1500	1500	-	-	-	-
6135DC	P_1[kW]	1.84	1.58	-	-	-	-	-	-	-	-	-	-	-	-
	T_{OUT}[N•m]	940	940	-	-	-	-	-	-	-	-	-	-	-	-
	T_{OUT}[kgf•m]	95.8	95.8	-	-	-	-	-	-	-	-	-	-	-	-
	Pro[N]	14700	14700	-	-	-	-	-	-	-	-	-	-	-	-
	Pro[kgf]	1500	1500	-	-	-	-	-	-	-	-	-	-	-	-
6140DA	P_1[kW]	-	-	-	-	-	-	-	-	0.429	0.429	0.429	0.384	0.341	0.297
	T_{OUT}[N•m]	-	-	-	-	-	-	-	-	795	998	1180	1230	1230	1230
	T_{OUT}[kgf•m]	-	-	-	-	-	-	-	-	81.1	102	120	125	125	125
	Pro[N]	-	-	-	-	-	-	-	-	16000	16000	16000	16000	16000	16000
	Pro[kgf]	-	-	-	-	-	-	-	-	1630	1630	1630	1630	1630	1630
6140DB	P_1[kW]	1.60	1.60	1.60	1.51	1.28	1.08	0.914	0.782	0.662	0.527	0.446	-	-	-
	T_{OUT}[N•m]	817	950	1120	1230	1230	1230	1230	1230	1230	1230	1230	-	-	-
	T_{OUT}[kgf•m]	83.3	96.9	114	125	125	125	125	125	125	125	125	-	-	-
	Pro[N]	16000	16000	16000	16000	16000	16000	16000	16000	16000	16000	16000	-	-	-
	Pro[kgf]	1630	1630	1630	1630	1630	1630	1630	1630	1630	1630	1630	-	-	-
6140DC	P_1[kW]	2.40	2.06	1.74	1.51	-	-	-	-	-	-	-	-	-	-
	T_{OUT}[N•m]	1230	1230	1230	1230	-	-	-	-	-	-	-	-	-	-
	T_{OUT}[kgf•m]	125	125	125	125	-	-	-	-	-	-	-	-	-	-
	Pro[N]	16000	16000	16000	16000	-	-	-	-	-	-	-	-	-	-
	Pro[kgf]	1630	1630	1630	1630	-	-	-	-	-	-	-	-	-	-
6145DA	P_1[kW]	-	-	-	-	-	-	-	-	-	-	0.429	0.429	0.382	0.302
	T_{OUT}[N•m]	-	-	-	-	-	-	-	-	-	-	1180	1370	1370	1250
	T_{OUT}[kgf•m]	-	-	-	-	-	-	-	-	-	-	120	140	140	127
	Pro[N]	-	-	-	-	-	-	-	-	-	-	16000	16000	15700	16000
	Pro[kgf]	-	-	-	-	-	-	-	-	-	-	1630	1630	1600	1630
6145DB	P_1[kW]	-	-	1.60	1.60	1.42	1.18	0.998	0.874	0.740	0.590	0.499	0.430	-	0.332
	T_{OUT}[N•m]	-	-	1120	1300	1360	1340	1340	1370	1370	1370	1370	1370	-	1370
	T_{OUT}[kgf•m]	-	-	114	132	138	136	136	140	140	140	140	140	-	140
	Pro[N]	-	-	16000	16000	16000	16000	16000	15800	15800	15700	15700	16000	-	15800
	Pro[kgf]	-	-	1630	1630	1630	1630	1630	1610	1610	1600	1600	1630	-	1610
6145DC	P_1[kW]	2.68	2.17	1.95	1.68	-	-	-	-	-	-	-	-	-	-
	T_{OUT}[N•m]	1370	1290	1370	1360	-	-	-	-	-	-	-	-	-	-
	T_{OUT}[kgf•m]	140	132	140	138	-	-	-	-	-	-	-	-	-	-
	Pro[N]	15900	16000	15900	16000	-	-	-	-	-	-	-	-	-	-
	Pro[kgf]	1620	1630	1620	1630	-	-	-	-	-	-	-	-	-	-
6160DA	P_1[kW]	-	-	-	1.60	1.60	1.55	1.31	1.12	0.948	0.747	0.632	0.551	0.483	0.425
	T_{OUT}[N•m]	-	-	-	1300	1530	1760	1760	1760	1760	1740	1740	1760	1740	1760
	T_{OUT}[kgf•m]	-	-	-	132	156	179	179	179	179	177	177	179	177	179
	Pro[N]	-	-	-	22100	22100	22100	22100	22100	22100	22100	22100	22100	22100	22100
	Pro[kgf]	-	-	-	2250	2250	2250	2250	2250	2250	2250	2250	2250	2250	2250
6160DB	P_1[kW]	3.36	2.95	2.50	2.17	1.83	1.55	-	-	-	-	-	-	-	-
	T_{OUT}[N•m]	1710	1760	1760	1760	1760	1760	-	-	-	-	-	-	-	-
	T_{OUT}[kgf•m]	175	179	179	179	179	179	-	-	-	-	-	-	-	-
	Pro[N]	22100	22100	22100	22100	22100	22100	-	-	-	-	-	-	-	-
	Pro[kgf]	2250	2250	2250	2250	2250	2250	-	-	-	-	-	-	-	-
Frame Size	Ratio [Z]	104	121	143	165	195	231	273	319	377	473	559	649	731	841
	n_2 [r/min]	16.8	14.5	12.2	10.6	8.97	7.58	6.41	5.49	4.64	3.70	3.13	2.70	2.39	2.08

Note: 1. Allowable radial load Pro is the value at the midpoint of the output shaft. Refer to pages F-11~12 when radial load is off the midpoint of output shaft and for checking thrust load.
2. Refer to pages F-15~16 for allowable radial load for input shaft.

Selection Tables 6000 Series Reducer

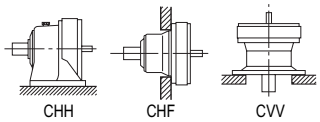

Input Speed	n_1 = 1750 r/min

1.74	1.40	1.18	0.946	0.847	0.690	0.575	0.503	0.394	0.341	0.283	0.231	n_2 [r/min]	Page of Dim.	Frame Size
1003	1247	1479	1849	2065	2537	3045	3481	4437	5133	6177	7569	Ratio [Z]		
-	-	-	-	-	-	-	-	-	-	**0.200**	**0.200**	P_1[kW]		
-	-	-	-	-	-	-	-	-	-	848	848	T_{OUT}[N•m]	CHH C-74	
-	-	-	-	-	-	-	-	-	-	86.5	86.5	T_{OUT}[kgf•m]	CHF C-79	**6130DB**
-	-	-	-	-	-	-	-	-	-	14700	14700	Pro[N]	CVV C-86	
-	-	-	-	-	-	-	-	-	-	1500	1500	Pro[kgf]		
-	-	-	-	-	-	-	-	-	-	-	-	P_1[kW]		
-	-	-	-	-	-	-	-	-	-	-	-	T_{OUT}[N•m]	CHH C-74	
-	-	-	-	-	-	-	-	-	-	-	-	T_{OUT}[kgf•m]	CHF C-79	**6130DC**
-	-	-	-	-	-	-	-	-	-	-	-	Pro[N]	CVV C-86	
-	-	-	-	-	-	-	-	-	-	-	-	Pro[kgf]		
0.213	**0.200**	**0.200**	**0.200**	**0.200**	**0.200**	**0.200**	**0.200**	**0.200**	**0.200**	-	-	P_1[kW]		
1050	940	979	940	1050	1050	979	1050	979	979	-	-	T_{OUT}[N•m]	CHH C-74	
107	95.8	99.8	95.8	107	107	99.8	107	99.8	99.8	-	-	T_{OUT}[kgf•m]	CHF C-79	**6135DA**
14700	14700	14700	14700	14700	14700	14700	14700	14700	14700	-	-	Pro[N]	CVV C-86	
1500	1500	1500	1500	1500	1500	1500	1500	1500	1500	-	-	Pro[kgf]		
-	-	-	-	-	-	-	-	-	-	**0.200**	**0.200**	P_1[kW]		
-	-	-	-	-	-	-	-	-	-	979	979	T_{OUT}[N•m]	CHH C-74	
-	-	-	-	-	-	-	-	-	-	99.8	99.8	T_{OUT}[kgf•m]	CHF C-79	**6135DB**
-	-	-	-	-	-	-	-	-	-	14700	14700	Pro[N]	CVV C-86	
-	-	-	-	-	-	-	-	-	-	1500	1500	Pro[kgf]		
-	-	-	-	-	-	-	-	-	-	-	-	P_1[kW]		
-	-	-	-	-	-	-	-	-	-	-	-	T_{OUT}[N•m]	CHH C-74	
-	-	-	-	-	-	-	-	-	-	-	-	T_{OUT}[kgf•m]	CHF C-79	**6135DC**
-	-	-	-	-	-	-	-	-	-	-	-	Pro[N]	CVV C-86	
-	-	-	-	-	-	-	-	-	-	-	-	Pro[kgf]		
0.249	**0.200**	**0.200**	**0.200**	**0.200**	**0.200**	**0.200**	**0.200**	**0.200**	**0.200**	-	-	P_1[kW]		
1230	1230	1230	1230	1230	1230	1230	1230	1230	1230	-	-	T_{OUT}[N•m]	CHH C-74	
125	125	125	125	125	125	125	125	125	125	-	-	T_{OUT}[kgf•m]	CHF C-79	**6140DA**
16000	16000	16000	16000	16000	16000	16000	16000	16000	16000	-	-	Pro[N]	CVV C-86	
1630	1630	1630	1630	1630	1630	1630	1630	1630	1630	-	-	Pro[kgf]		
-	-	-	-	-	-	-	-	-	-	**0.200**	**0.200**	P_1[kW]		
-	-	-	-	-	-	-	-	-	-	1230	1230	T_{OUT}[N•m]	CHH C-74	
-	-	-	-	-	-	-	-	-	-	125	125	T_{OUT}[kgf•m]	CHF C-79	**6140DB**
-	-	-	-	-	-	-	-	-	-	16000	16000	Pro[N]	CVV C-86	
-	-	-	-	-	-	-	-	-	-	1630	1630	Pro[kgf]		
-	-	-	-	-	-	-	-	-	-	-	-	P_1[kW]		
-	-	-	-	-	-	-	-	-	-	-	-	T_{OUT}[N•m]	CHH C-74	
-	-	-	-	-	-	-	-	-	-	-	-	T_{OUT}[kgf•m]	CHF C-79	**6140DC**
-	-	-	-	-	-	-	-	-	-	-	-	Pro[N]	CVV C-86	
-	-	-	-	-	-	-	-	-	-	-	-	Pro[kgf]		
0.278	0.224	**0.200**	**0.200**	**0.200**	**0.200**	**0.200**	**0.200**	**0.200**	**0.200**	-	-	P_1[kW]		
1370	1370	1250	1370	1370	1370	1250	1370	1250	1250	-	-	T_{OUT}[N•m]	CHH C-74	
140	140	127	140	140	140	127	140	127	127	-	-	T_{OUT}[kgf•m]	CHF C-79	**6145DA**
16000	15700	16000	15700	16000	16000	16000	16000	16000	16000	-	-	Pro[N]	CVV C-86	
1630	1600	1630	1600	1630	1630	1630	1630	1630	1630	-	-	Pro[kgf]		
-	-	-	-	-	-	-	-	-	-	**0.200**	**0.200**	P_1[kW]		
-	-	-	-	-	-	-	-	-	-	1250	1250	T_{OUT}[N•m]	CHH C-74	
-	-	-	-	-	-	-	-	-	-	127	127	T_{OUT}[kgf•m]	CHF C-79	**6145DB**
-	-	-	-	-	-	-	-	-	-	16000	16000	Pro[N]	CVV C-86	
-	-	-	-	-	-	-	-	-	-	1630	1630	Pro[kgf]		
-	-	-	-	-	-	-	-	-	-	-	-	P_1[kW]		
-	-	-	-	-	-	-	-	-	-	-	-	T_{OUT}[N•m]	CHH C-74	
-	-	-	-	-	-	-	-	-	-	-	-	T_{OUT}[kgf•m]	CHF C-79	**6145DC**
-	-	-	-	-	-	-	-	-	-	-	-	Pro[N]	CVV C-86	
-	-	-	-	-	-	-	-	-	-	-	-	Pro[kgf]		
0.400	**0.400**	**0.400**	**0.200**	**0.200**	**0.200**	**0.200**	**0.200**	**0.200**	**0.200**	**0.200**	**0.200**	P_1[kW]		
1760	1740	1760	1740	1760	1760	1760	1760	1760	1760	1760	1760	T_{OUT}[N•m]	CHH C-74	
179	177	179	177	179	179	179	179	179	179	179	179	T_{OUT}[kgf•m]	CHF C-79	**6160DA**
22100	22100	22100	22100	22100	22100	22100	22100	22100	22100	22100	22100	Pro[N]	CVV C-86	
2250	2250	2250	2250	2250	2250	2250	2250	2250	2250	2250	2250	Pro[kgf]		
-	-	-	-	-	-	-	-	-	-	-	-	P_1[kW]		
-	-	-	-	-	-	-	-	-	-	-	-	T_{OUT}[N•m]	CHH C-74	
-	-	-	-	-	-	-	-	-	-	-	-	T_{OUT}[kgf•m]	CHF C-79	**6160DB**
-	-	-	-	-	-	-	-	-	-	-	-	Pro[N]	CVV C-86	
-	-	-	-	-	-	-	-	-	-	-	-	Pro[kgf]		
1003	1247	1479	1849	2065	2537	3045	3481	4437	5133	6177	7569	Ratio [Z]	Page of Dim.	Frame Size
1.74	1.40	1.18	0.946	0.847	0.690	0.575	0.503	0.394	0.341	.0283	0.231	n_2 [r/min]		

Note: 3. Necessary input power for starting is printed in bold face. Do not exceed allowable output torque after startup.

Selection Tables 6000 Series Reducer

Double Reduction Ratio 104,121 ~ 7569 Frame Size: 6160DC ~ 6185DA

Input Speed	n_1 = 1750 r/min	n_1: Input Speed [r/min]	T_{out}: Allowable output torque [N·m, kgf·m]
		n_2: Output Speed [r/min]	Pro: Allowable output shaft radial load [N, kgf]
		P_1: Allowable input power [kW]	*Consult us for Pro of CNF and CHF type.

Frame Size	n_2 [r/min]	16.8	14.5	12.2	10.6	8.97	7.58	6.41	5.49	4.64	3.70	3.13	2.70	2.39	2.08
	Ratio [Z]	104	121	143	165	195	231	273	319	377	473	559	649	731	841
6160DC	P_1[kW]	3.44	2.95	2.50	-	-	-	-	-	-	-	-	-	-	-
	T_{OUT}[N•m]	1760	1760	1760	-	-	-	-	-	-	-	-	-	-	-
	T_{OUT}[kgf•m]	179	179	179	-	-	-	-	-	-	-	-	-	-	-
	Pro[N]	22100	22100	22100	-	-	-	-	-	-	-	-	-	-	-
	Pro[kgf]	2250	2250	2250	-	-	-	-	-	-	-	-	-	-	-
6165DA	P_1[kW]	-	-	-	-	1.60	1.60	1.57	1.34	1.13	0.904	0.765	0.659	0.585	0.508
	T_{OUT}[N•m]	-	-	-	-	1530	1810	2100	2100	2100	2100	2100	2100	2100	2100
	T_{OUT}[kgf•m]	-	-	-	-	156	185	214	214	214	214	214	214	214	214
	Pro[N]	-	-	-	-	22100	22100	22100	22100	22100	22100	22100	22100	22100	22100
	Pro[kgf]	-	-	-	-	2250	2250	2250	2250	2250	2250	2250	2250	2250	2250
6165DB	P_1[kW]	3.36	3.36	2.99	2.59	2.19	1.85	1.57	-	-	-	-	-	-	-
	T_{OUT}[N•m]	1710	1990	2100	2100	2100	2100	2100	-	-	-	-	-	-	-
	T_{OUT}[kgf•m]	175	203	214	214	214	214	214	-	-	-	-	-	-	-
	Pro[N]	22100	22100	22100	22100	22100	22100	22100	-	-	-	-	-	-	-
	Pro[kgf]	2250	2250	2250	2250	2250	2250	2250	-	-	-	-	-	-	-
6165DC	P_1[kW]	4.11	3.53	2.99	2.59	-	-	-	-	-	-	-	-	-	-
	T_{OUT}[N•m]	2100	2100	2100	2100	-	-	-	-	-	-	-	-	-	-
	T_{OUT}[kgf•m]	214	214	214	214	-	-	-	-	-	-	-	-	-	-
	Pro[N]	22100	22100	22100	22100	-	-	-	-	-	-	-	-	-	-
	Pro[kgf]	2250	2250	2250	2250	-	-	-	-	-	-	-	-	-	-
6170DA	P_1[kW]	-	-	-	-	-	1.60	1.60	1.60	1.37	1.09	0.922	0.794	0.705	0.613
	T_{OUT}[N•m]	-	-	-	-	-	1810	2140	2510	2530	2530	2530	2530	2530	2530
	T_{OUT}[kgf•m]	-	-	-	-	-	185	219	255	258	258	258	258	258	258
	Pro[N]	-	-	-	-	-	29500	29500	29500	29500	29500	29500	29500	29500	29500
	Pro[kgf]	-	-	-	-	-	3010	3010	3010	3010	3010	3010	3010	3010	3010
6170DB	P_1[kW]	-	3.36	3.36	3.12	2.64	2.23	1.89	1.61	-	-	-	-	-	-
	T_{OUT}[N•m]	-	1990	2360	2530	2530	2530	2530	2530	-	-	-	-	-	-
	T_{OUT}[kgf•m]	-	203	240	258	258	258	258	258	-	-	-	-	-	-
	Pro[N]	-	29500	29500	29500	29500	29500	29500	29500	-	-	-	-	-	-
	Pro[kgf]	-	3010	3010	3010	3010	3010	3010	3010	-	-	-	-	-	-
6170DC	P_1[kW]	4.95	4.26	3.60	3.12	2.64	2.23	-	-	-	-	-	-	-	-
	T_{OUT}[N•m]	2530	2530	2530	2530	2530	2530	-	-	-	-	-	-	-	-
	T_{OUT}[kgf•m]	258	258	258	258	258	258	-	-	-	-	-	-	-	-
	Pro[N]	28600	29500	29500	29500	29500	29500	-	-	-	-	-	-	-	-
	Pro[kgf]	2920	3010	3010	3010	3010	3010	-	-	-	-	-	-	-	-
6175DA	P_1[kW]	-	-	-	-	-	-	1.60	1.60	1.60	1.36	1.15	0.988	0.877	0.763
	T_{OUT}[N•m]	-	-	-	-	-	-	2140	2510	2960	3150	3150	3150	3150	3150
	T_{OUT}[kgf•m]	-	-	-	-	-	-	219	255	302	321	321	321	321	321
	Pro[N]	-	-	-	-	-	-	29500	29500	29500	29500	29500	29500	29500	29500
	Pro[kgf]	-	-	-	-	-	-	3010	3010	3010	3010	3010	3010	3010	3010
6175DB	P_1[kW]	-	-	3.36	3.36	3.29	2.78	2.35	2.01	1.70	-	-	-	-	-
	T_{OUT}[N•m]	-	-	2360	2720	3150	3150	3150	3150	3150	-	-	-	-	-
	T_{OUT}[kgf•m]	-	-	240	277	321	321	321	321	321	-	-	-	-	-
	Pro[N]	-	-	29500	29500	29500	29500	29500	29500	29500	-	-	-	-	-
	Pro[kgf]	-	-	3010	3010	3010	3010	3010	3010	3010	-	-	-	-	-
6175DC	P_1[kW]	6.17	5.30	4.49	3.89	3.29	2.78	2.35	-	-	-	-	-	-	-
	T_{OUT}[N•m]	3150	3150	3150	3150	3150	3150	3150	-	-	-	-	-	-	-
	T_{OUT}[kgf•m]	321	321	321	321	321	321	321	-	-	-	-	-	-	-
	Pro[N]	28300	29500	29500	29500	29500	29500	29500	-	-	-	-	-	-	-
	Pro[kgf]	2880	3010	3010	3010	3010	3010	3010	-	-	-	-	-	-	-
6180DA	P_1[kW]	-	-	-	3.36	3.36	3.36	3.02	2.59	2.19	1.75	1.48	1.27	1.13	0.981
	T_{OUT}[N•m]	-	-	-	2720	3210	3810	4050	4050	4050	4060	4060	4050	4060	4050
	T_{OUT}[kgf•m]	-	-	-	277	328	388	413	413	413	414	414	413	414	413
	Pro[N]	-	-	-	41700	41700	41700	41700	41700	41700	41700	41700	41700	41700	41700
	Pro[kgf]	-	-	-	4250	4250	4250	4250	4250	4250	4250	4250	4250	4250	4250
6180DB	P_1[kW]	7.95	6.83	5.78	5.01	4.24	3.57	3.02	2.59	-	-	-	-	-	-
	T_{OUT}[N•m]	4060	4060	4060	4060	4060	4050	4050	4050	-	-	-	-	-	-
	T_{OUT}[kgf•m]	414	414	414	414	414	413	413	413	-	-	-	-	-	-
	Pro[N]	37700	40300	41700	41700	41700	41700	41700	41700	-	-	-	-	-	-
	Pro[kgf]	3840	4100	4250	4250	4250	4250	4250	4250	-	-	-	-	-	-
6185DA	P_1[kW]	-	-	-	-	-	3.36	3.36	3.19	2.70	2.15	1.82	1.57	1.39	1.21
	T_{OUT}[N•m]	-	-	-	-	-	3810	4500	5000	5000	5000	5000	5000	5000	5000
	T_{OUT}[kgf•m]	-	-	-	-	-	388	459	510	510	510	510	510	510	510
	Pro[N]	-	-	-	-	-	41700	41700	41700	41700	41700	41700	41600	41700	41700
	Pro[kgf]	-	-	-	-	-	4250	4250	4250	4250	4250	4250	4240	4250	4250
Frame Size	Ratio [Z]	104	121	143	165	195	231	273	319	377	473	559	649	731	841
	n_2 [r/min]	16.8	14.5	12.2	10.6	8.97	7.58	6.41	5.49	4.64	3.70	3.13	2.70	2.39	2.08

Note: 1. Allowable radial load Pro is the value at the midpoint of the output shaft. Refer to pages F-11~12 when radial load is off the midpoint of output shaft and for checking thrust load.
2. Refer to pages F-15~16 for allowable radial load for input shaft.

Selection Tables 6000 Series Reducer

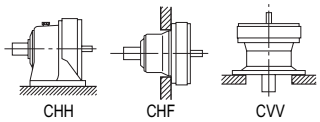

Input Speed	n_1 = 1750 r/min

1.74	1.40	1.18	0.946	0.847	0.690	0.575	0.503	0.394	0.341	0.283	0.231	n_2 [r/min]	Page of Dim.	Frame Size
1003	1247	1479	1849	2065	2537	3045	3481	4437	5133	6177	7569	Ratio [Z]		
-	-	-	-	-	-	-	-	-	-	-	-	P_1[kW]		
-	-	-	-	-	-	-	-	-	-	-	-	T_{OUT}[N•m]	CHH C-75	
-	-	-	-	-	-	-	-	-	-	-	-	T_{OUT}[kgf•m]	CHF C-80	**6160DC**
-	-	-	-	-	-	-	-	-	-	-	-	Pro[N]	CVV C-87	
-	-	-	-	-	-	-	-	-	-	-	-	Pro[kgf]		
0.426	**0.400**	**0.400**	**0.400**	0.207	**0.200**	**0.200**	**0.200**	**0.200**	**0.200**	**0.200**	**0.200**	P_1[kW]		
2100	2100	2050	2100	2100	2100	2050	2100	2050	2050	2050	2050	T_{OUT}[N•m]	CHH C-74	
214	214	209	214	214	214	209	214	209	209	209	209	T_{OUT}[kgf•m]	CHF C-79	**6165DA**
22100	22100	21800	22100	22100	22100	21800	22100	21800	21800	21800	21800	Pro[N]	CVV C-86	
2250	2250	2220	2250	2250	2250	2220	2250	2220	2220	2220	2220	Pro[kgf]		
-	-	-	-	-	-	-	-	-	-	-	-	P_1[kW]		
-	-	-	-	-	-	-	-	-	-	-	-	T_{OUT}[N•m]	CHH C-74	
-	-	-	-	-	-	-	-	-	-	-	-	T_{OUT}[kgf•m]	CHF C-79	**6165DB**
-	-	-	-	-	-	-	-	-	-	-	-	Pro[N]	CVV C-86	
-	-	-	-	-	-	-	-	-	-	-	-	Pro[kgf]		
-	-	-	-	-	-	-	-	-	-	-	-	P_1[kW]		
-	-	-	-	-	-	-	-	-	-	-	-	T_{OUT}[N•m]	CHH C-75	
-	-	-	-	-	-	-	-	-	-	-	-	T_{OUT}[kgf•m]	CHF C-80	**6165DC**
-	-	-	-	-	-	-	-	-	-	-	-	Pro[N]	CVV C-87	
-	-	-	-	-	-	-	-	-	-	-	-	Pro[kgf]		
0.514	0.413	**0.400**	**0.400**	**0.400**	0.203	**0.200**	**0.200**	**0.200**	**0.200**	**0.200**	**0.200**	P_1[kW]		
2530	2530	2530	2530	2530	2530	2530	2530	2530	2530	2530	2530	T_{OUT}[N•m]	CHH C-74	
258	258	258	258	258	258	258	258	258	258	258	258	T_{OUT}[kgf•m]	CHF C-79	**6170DA**
29500	29500	29500	29500	29500	29500	29500	29500	29500	29500	29500	29500	Pro[N]	CVV C-86	
3010	3010	3010	3010	3010	3010	3010	3010	3010	3010	3010	3010	Pro[kgf]		
-	-	-	-	-	-	-	-	-	-	-	-	P_1[kW]		
-	-	-	-	-	-	-	-	-	-	-	-	T_{OUT}[N•m]	CHH C-74	
-	-	-	-	-	-	-	-	-	-	-	-	T_{OUT}[kgf•m]	CHF C-79	**6170DB**
-	-	-	-	-	-	-	-	-	-	-	-	Pro[N]	CVV C-86	
-	-	-	-	-	-	-	-	-	-	-	-	Pro[kgf]		
-	-	-	-	-	-	-	-	-	-	-	-	P_1[kW]		
-	-	-	-	-	-	-	-	-	-	-	-	T_{OUT}[N•m]	CHH C-75	
-	-	-	-	-	-	-	-	-	-	-	-	T_{OUT}[kgf•m]	CHF C-80	**6170DC**
-	-	-	-	-	-	-	-	-	-	-	-	Pro[N]	CVV C-87	
-	-	-	-	-	-	-	-	-	-	-	-	Pro[kgf]		
0.639	0.514	0.434	**0.400**	**0.400**	**0.400**	0.211	**0.200**	**0.200**	**0.200**	**0.200**	**0.200**	P_1[kW]		
3150	3150	3150	3150	3150	3150	3150	3150	3150	3150	3150	3150	T_{OUT}[N•m]	CHH C-74	
321	321	321	321	321	321	321	321	321	321	321	321	T_{OUT}[kgf•m]	CHF C-79	**6175DA**
29500	29500	29500	29500	29500	29500	29500	29500	29500	29500	29500	29500	Pro[N]	CVV C-86	
3010	3010	3010	3010	3010	3010	3010	3010	3010	3010	3010	3010	Pro[kgf]		
-	-	-	-	-	-	-	-	-	-	-	-	P_1[kW]		
-	-	-	-	-	-	-	-	-	-	-	-	T_{OUT}[N•m]	CHH C-74	
-	-	-	-	-	-	-	-	-	-	-	-	T_{OUT}[kgf•m]	CHF C-79	**6175DB**
-	-	-	-	-	-	-	-	-	-	-	-	Pro[N]	CVV C-86	
-	-	-	-	-	-	-	-	-	-	-	-	Pro[kgf]		
-	-	-	-	-	-	-	-	-	-	-	-	P_1[kW]		
-	-	-	-	-	-	-	-	-	-	-	-	T_{OUT}[N•m]	CHH C-75	
-	-	-	-	-	-	-	-	-	-	-	-	T_{OUT}[kgf•m]	CHF C-80	**6175DC**
-	-	-	-	-	-	-	-	-	-	-	-	Pro[N]	CVV C-87	
-	-	-	-	-	-	-	-	-	-	-	-	Pro[kgf]		
0.822	**0.750**	**0.750**	0.447	**0.400**	**0.400**	**0.400**	**0.400**	**0.400**	**0.400**	**0.400**	**0.400**	P_1[kW]		
4050	4060	4060	4060	4050	4050	4060	4050	4060	4060	4060	4060	T_{OUT}[N•m]	CHH C-74	
413	414	414	414	413	413	414	413	414	414	414	414	T_{OUT}[kgf•m]	CHF C-79	**6180DA**
41700	41700	41700	41700	41700	41700	41700	41700	41700	41700	41700	41700	Pro[N]	CVV C-86	
4250	4250	4250	4250	4250	4250	4250	4250	4250	4250	4250	4250	Pro[kgf]		
-	-	-	-	-	-	-	-	-	-	-	-	P_1[kW]		
-	-	-	-	-	-	-	-	-	-	-	-	T_{OUT}[N•m]	CHH C-75	
-	-	-	-	-	-	-	-	-	-	-	-	T_{OUT}[kgf•m]	CHF C-80	**6180DB**
-	-	-	-	-	-	-	-	-	-	-	-	Pro[N]	CVV C-87	
-	-	-	-	-	-	-	-	-	-	-	-	Pro[kgf]		
1.01	0.816	**0.750**	**0.750**	**0.750**	0.401	**0.400**	**0.400**	**0.400**	**0.400**	**0.400**	**0.400**	P_1[kW]		
5000	5000	5000	5000	5000	5000	5000	5000	5000	5000	5000	5000	T_{OUT}[N•m]	CHH C-74	
510	510	510	510	510	510	510	510	510	510	510	510	T_{OUT}[kgf•m]	CHF C-79	**6185DA**
41600	41700	41700	41700	41600	41600	41700	41600	41700	41700	41700	41700	Pro[N]	CVV C-86	
4240	4250	4250	4250	4240	4240	4250	4240	4250	4250	4250	4250	Pro[kgf]		
1003	1247	1479	1849	2065	2537	3045	3481	4437	5133	6177	7569	Ratio [Z]	Page of Dim.	Frame Size
1.74	1.40	1.18	0.946	0.847	0.690	0.575	0.503	0.394	0.341	.0283	0.231	n_2 [r/min]		

Note: 3. Necessary input power for starting is printed in bold face. Do not exceed allowable output torque after startup.

Selection Tables 6000 Series Reducer

Double Reduction Ratio 104,121 ~ 7569 Frame Size: 6185DB ~ 6235DB

Input Speed	n_1 = 1750 r/min	n_1: Input Speed [r/min]	T_{out}: Allowable output torque [N·m, kgf·m]
		n_2: Output Speed [r/min]	Pro: Allowable output shaft radial load [N, kgf]
		P_1: Allowable input power [kW]	*Consult us for Pro of CNF and CHF type.

Frame Size	n_2 [r/min]	16.8	14.5	12.2	10.6	8.97	7.58	6.41	5.49	4.64	3.70	3.13	2.70	2.39	2.08
	Ratio [Z]	104	121	143	165	195	231	273	319	377	473	559	649	731	841
6185DB	P_1[kW]	9.60	8.09	6.98	6.07	5.14	4.41	3.73	3.19	2.70	-	-	-	-	-
	T_{OUT}[N•m]	4900	4810	4900	4920	4920	5000	5000	5000	5000	-	-	-	-	-
	T_{OUT}[kgf•m]	500	490	500	502	502	510	510	510	510	-	-	-	-	-
	Pro[N]	37300	40000	41700	41700	41700	41700	41700	41700	41700	-	-	-	-	-
	Pro[kgf]	3800	4070	4250	4250	4250	4250	4250	4250	4250	-	-	-	-	-
6190DA	P_1[kW]	-	-	6.25	6.25	6.25	5.62	4.76	4.07	3.45	2.75	2.32	2.00	1.78	1.54
	T_{OUT}[N•m]	-	-	4390	5060	5980	6380	6380	6380	6380	6380	6380	6380	6380	6380
	T_{OUT}[kgf•m]	-	-	447	516	610	650	650	650	650	650	650	650	650	650
	Pro[N]	-	-	59000	59000	59000	59000	59000	59000	59000	59000	59000	58600	59000	59000
	Pro[kgf]	-	-	6010	6010	6010	6010	6010	6010	6010	6010	6010	5970	6010	6010
6190DB	P_1[kW]	11.9	10.7	9.08	7.87	6.66	5.62	-	-	-	-	-	-	-	-
	T_{OUT}[N•m]	6090	6380	6380	6380	6380	6380	-	-	-	-	-	-	-	-
	T_{OUT}[kgf•m]	621	650	650	650	650	650	-	-	-	-	-	-	-	-
	Pro[N]	52400	55900	58400	58900	58900	59000	-	-	-	-	-	-	-	-
	Pro[kgf]	5340	5700	5950	6000	6000	6010	-	-	-	-	-	-	-	-
6195DA	P_1[kW]	-	-	-	-	6.25	6.25	5.94	5.08	4.30	3.43	2.90	2.50	2.22	1.93
	T_{OUT}[N•m]	-	-	-	-	5980	7090	7960	7960	7960	7960	7960	7960	7960	7960
	T_{OUT}[kgf•m]	-	-	-	-	610	723	811	811	811	811	811	811	811	811
	Pro[N]	-	-	-	-	59000	59000	59000	59000	59000	59000	59000	58100	59000	59000
	Pro[kgf]	-	-	-	-	6010	6010	6010	6010	6010	6010	6010	5930	6010	6010
6195DB	P_1[kW]	11.9	11.9	10.9	9.76	8.26	7.02	5.94	-	-	-	-	-	-	-
	T_{OUT}[N•m]	6090	7090	7630	7910	7910	7960	7960	-	-	-	-	-	-	-
	T_{OUT}[kgf•m]	621	723	778	806	806	811	811	-	-	-	-	-	-	-
	Pro[N]	52400	55700	57900	58300	58300	59000	59000	-	-	-	-	-	-	-
	Pro[kgf]	5340	5680	5900	5940	5940	6010	6010	-	-	-	-	-	-	-
6205DA	P_1[kW]	-	-	-	-	-	-	5.86	4.84	4.34	3.35	3.00	2.44	2.52	2.23
	T_{OUT}[N•m]	-	-	-	-	-	-	7860	7590	8030	7780	8230	7790	9060	9230
	T_{OUT}[kgf•m]	-	-	-	-	-	-	801	773	819	793	839	794	923	941
	Pro[N]	-	-	-	-	-	-	84100	84100	84100	84100	84100	84100	84100	84100
	Pro[kgf]	-	-	-	-	-	-	8570	8570	8570	8570	8570	8570	8570	8570
6205DB	P_1[kW]	-	11.9	-	11.4	9.68	8.17	6.92	5.89	4.99	4.00	3.39	2.92	2.59	
	T_{OUT}[N•m]	-	7090	-	9270	9270	9270	9270	9230	9230	9300	9300	9300	9300	
	T_{OUT}[kgf•m]	-	723	-	945	945	945	945	941	941	948	948	948	948	
	Pro[N]	-	84100	-	84100	84100	84100	84100	84100	84100	84100	84100	84100	84100	
	Pro[kgf]	-	8570	-	8570	8570	8570	8570	8570	8570	8570	8570	8570	8570	
6215DA	P_1[kW]	-	-	-	11.9	11.9	11.0	9.32	8.07	6.83	5.45	4.61	3.97	3.52	3.06
	T_{OUT}[N•m]	-	-	-	9670	11400	12500	12500	12700	12700	12700	12700	12700	12700	12700
	T_{OUT}[kgf•m]	-	-	-	985	1160	1270	1270	1290	1290	1290	1290	1290	1290	1290
	Pro[N]	-	-	-	104000	104000	104000	104000	104000	104000	104000	104000	104000	104000	104000
	Pro[kgf]	-	-	-	10600	10600	10600	10600	10600	10600	10600	10600	10600	10600	10600
6215DB	P_1[kW]	-	19.1	-	15.0	12.7	-	-	-	-	-	-	-	-	-
	T_{OUT}[N•m]	-	11400	-	12200	12200	-	-	-	-	-	-	-	-	-
	T_{OUT}[kgf•m]	-	1160	-	1240	1240	-	-	-	-	-	-	-	-	-
	Pro[N]	-	101000	-	104000	104000	-	-	-	-	-	-	-	-	-
	Pro[kgf]	-	10300	-	10600	10600	-	-	-	-	-	-	-	-	-
6225DA	P_1[kW]	-	-	-	-	11.9	11.9	11.0	9.60	8.12	6.89	5.83	4.98	4.46	3.64
	T_{OUT}[N•m]	-	-	-	-	11400	13500	14800	15000	15000	16000	16000	15900	16000	15000
	T_{OUT}[kgf•m]	-	-	-	-	1160	1380	1510	1530	1530	1630	1630	1620	1630	1530
	Pro[N]	-	-	-	-	122000	130000	137000	142000	145000	145000	145000	145000	145000	145000
	Pro[kgf]	-	-	-	-	12500	13200	13900	14500	14800	14800	14800	14800	14800	14800
6225DB	P_1[kW]	-	22.6	-	17.9	15.1	13.0	-	-	-	-	-	-	-	-
	T_{OUT}[N•m]	-	13500	-	14500	14500	14800	-	-	-	-	-	-	-	-
	T_{OUT}[kgf•m]	-	1370	-	1480	1480	1510	-	-	-	-	-	-	-	-
	Pro[N]	-	106000	-	115000	122000	130000	-	-	-	-	-	-	-	-
	Pro[kgf]	-	10800	-	11800	12400	13200	-	-	-	-	-	-	-	-
6235DA	P_1[kW]	-	25.4	-	24.2	20.5	16.7	14.1	12.1	10.2	8.82	7.47	6.43	5.71	4.58
	T_{OUT}[N•m]	-	15100	-	19600	19600	18900	18900	18900	18900	20500	20500	20500	20500	18900
	T_{OUT}[kgf•m]	-	1540	-	2000	2000	1930	1930	1930	1930	2090	2090	2090	2090	1930
	Pro[N]	-	133000	-	143000	150000	162000	170000	177000	179000	179000	179000	179000	179000	179000
	Pro[kgf]	-	13600	-	14500	15300	16500	17300	18100	18200	18200	18200	18200	18200	18200
6235DB	P_1[kW]	-	31.5	-	24.2	-	-	-	-	-	-	-	-	-	-
	T_{OUT}[N•m]	-	18700	-	19600	-	-	-	-	-	-	-	-	-	-
	T_{OUT}[kgf•m]	-	1910	-	2000	-	-	-	-	-	-	-	-	-	-
	Pro[N]	-	133000	-	143000	-	-	-	-	-	-	-	-	-	-
	Pro[kgf]	-	13500	-	14500	-	-	-	-	-	-	-	-	-	-
Frame Size	Ratio [Z]	104	121	143	165	195	231	273	319	377	473	559	649	731	841
	n_2 [r/min]	16.8	14.5	12.2	10.6	8.97	7.58	6.41	5.49	4.64	3.70	3.13	2.70	2.39	2.08

Note: 1. Allowable radial load Pro is the value at the midpoint of the output shaft. Refer to pages F-11~12 when radial load is off the midpoint of output shaft and for checking thrust load.
2. Refer to pages F-15~16 for allowable radial load for input shaft.

Selection Tables 6000 Series Reducer

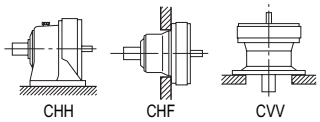

Input Speed	n_1 = 1750 r/min

1.74	1.40	1.18	0.946	0.847	0.690	0.575	0.503	0.394	0.341	0.283	0.231	n_2 [r/min]	Page of Dim.	Frame Size
1003	1247	1479	1849	2065	2537	3045	3481	4437	5133	6177	7569	Ratio [Z]		
-	-	-	-	-	-	-	-	-	-	-	-	P_1[kW]		
-	-	-	-	-	-	-	-	-	-	-	-	T_{OUT}[N•m]	CHH C-75	
-	-	-	-	-	-	-	-	-	-	-	-	T_{OUT}[kgf•m]	CHF C-80	**6185DB**
-	-	-	-	-	-	-	-	-	-	-	-	Pro[N]	CVV C-87	
-	-	-	-	-	-	-	-	-	-	-	-	Pro[kgf]		
1.30	1.04	0.878	**0.750**	**0.750**	**0.750**	**0.750**	**0.750**	**0.750**	**0.750**	**0.750**	**0.750**	P_1[kW]		
6380	6380	6380	6380	6380	6380	6380	6380	6380	6380	6380	6380	T_{OUT}[N•m]	CHH C-75	
650	650	650	650	650	650	650	650	650	650	650	650	T_{OUT}[kgf•m]	CHF C-80	**6190DA**
58600	59000	58900	59000	58600	58600	58900	58600	58900	58900	58900	58900	Pro[N]	CVV C-87	
5970	6010	6000	6010	5970	5970	6000	5970	6000	6000	6000	6000	Pro[kgf]		
-	-	-	-	-	-	-	-	-	-	-	-	P_1[kW]		
-	-	-	-	-	-	-	-	-	-	-	-	T_{OUT}[N•m]	CHH C-75	
-	-	-	-	-	-	-	-	-	-	-	-	T_{OUT}[kgf•m]	CHF C-80	**6190DB**
-	-	-	-	-	-	-	-	-	-	-	-	Pro[N]	CVV C-87	
-	-	-	-	-	-	-	-	-	-	-	-	Pro[kgf]		
1.62	1.30	1.10	0.877	0.785	**0.750**	**0.750**	**0.750**	**0.750**	**0.750**	**0.750**	**0.750**	P_1[kW]		
7960	7960	7960	7960	7960	7960	7960	7960	7960	7960	7960	7960	T_{OUT}[N•m]	CHH C-75	
811	811	811	811	811	811	811	811	811	811	811	811	T_{OUT}[kgf•m]	CHF C-80	**6195DA**
58100	59000	58400	59000	58100	58100	58400	58100	58400	58400	58400	58400	Pro[N]	CVV C-87	
5930	6010	5950	6010	5930	5930	5950	5930	5950	5950	5950	5950	Pro[kgf]		
-	-	-	-	-	-	-	-	-	-	-	-	P_1[kW]		
-	-	-	-	-	-	-	-	-	-	-	-	T_{OUT}[N•m]	CHH C-75	
-	-	-	-	-	-	-	-	-	-	-	-	T_{OUT}[kgf•m]	CHF C-80	**6195DB**
-	-	-	-	-	-	-	-	-	-	-	-	Pro[N]	CVV C-87	
-	-	-	-	-	-	-	-	-	-	-	-	Pro[kgf]		
2.20	**2.20**	**1.50**	**1.50**	**1.50**	**0.750**	**0.750**	**0.750**	**0.750**	**0.750**	**0.750**	**0.750**	P_1[kW]		
9060	9300	8360	9300	9300	9300	8760	9300	8760	9300	8760	8760	T_{OUT}[N•m]	CHH C-75	
923	948	853	948	948	948	893	948	893	948	893	893	T_{OUT}[kgf•m]	CHF C-80	**6205DA**
84100	84100	84100	84100	84100	84100	84100	84100	84100	84100	84100	84100	Pro[N]	CVV C-87	
8570	8570	8570	8570	8570	8570	8570	8570	8570	8570	8570	8570	Pro[kgf]		
2.20	-	**1.50**	-	-	-	-	-	-	-	-	-	P_1[kW]		
9300	-	8760	-	-	-	-	-	-	-	-	-	T_{OUT}[N•m]	CHH C-75	
948	-	893	-	-	-	-	-	-	-	-	-	T_{OUT}[kgf•m]	CHF C-80	**6205DB**
84100	-	84100	-	-	-	-	-	-	-	-	-	Pro[N]	CVV C-87	
8570	-	8570	-	-	-	-	-	-	-	-	-	Pro[kgf]		
2.57	**2.20**	1.55	**1.50**	**1.50**	**1.50**	**1.50**	**1.50**	**1.50**	**1.50**	**1.50**	**1.50**	P_1[kW]		
12700	12700	11300	12700	12700	12700	11300	12700	11300	12700	11300	11300	T_{OUT}[N•m]	CHH C-75	
1290	1290	1150	1290	1290	1290	1150	1290	1150	1290	1150	1150	T_{OUT}[kgf•m]	CHF C-80	**6215DA**
104000	104000	104000	104000	104000	104000	104000	104000	104000	104000	104000	104000	Pro[N]	CVV C-87	
10600	10600	10600	10600	10600	10600	10600	10600	10600	10600	10600	10600	Pro[kgf]		
-	-	-	-	-	-	-	-	-	-	-	-	P_1[kW]		
-	-	-	-	-	-	-	-	-	-	-	-	T_{OUT}[N•m]	CHH C-75	
-	-	-	-	-	-	-	-	-	-	-	-	T_{OUT}[kgf•m]	CHF C-80	**6215DB**
-	-	-	-	-	-	-	-	-	-	-	-	Pro[N]	CVV C-87	
-	-	-	-	-	-	-	-	-	-	-	-	Pro[kgf]		
3.22	2.61	**2.20**	1.76	1.57	**1.50**	**1.50**	**1.50**	**1.50**	**1.50**	**1.50**	**1.50**	P_1[kW]		
15900	16000	15100	16000	15900	15900	15100	15900	15100	15900	15100	15100	T_{OUT}[N•m]	CHH C-75	
1620	1630	1540	1630	1620	1620	1540	1620	1540	1620	1540	1540	T_{OUT}[kgf•m]	CHF C-80	**6225DA**
145000	145000	145000	145000	145000	145000	145000	145000	145000	145000	145000	145000	Pro[N]	CVV C-87	
14800	14800	14800	14800	14800	14800	14800	14800	14800	14800	14800	14800	Pro[kgf]		
-	-	-	-	-	-	-	-	-	-	-	-	P_1[kW]		
-	-	-	-	-	-	-	-	-	-	-	-	T_{OUT}[N•m]	CHH C-75	
-	-	-	-	-	-	-	-	-	-	-	-	T_{OUT}[kgf•m]	CHF C-80	**6225DB**
-	-	-	-	-	-	-	-	-	-	-	-	Pro[N]	CVV C-87	
-	-	-	-	-	-	-	-	-	-	-	-	Pro[kgf]		
4.16	3.35	2.36	2.26	**2.20**	**2.20**	**2.20**	**2.20**	**2.20**	**2.20**	**2.20**	**2.20**	P_1[kW]		
20500	20500	17200	20500	20500	20500	17200	20500	17200	20500	17200	17200	T_{OUT}[N•m]	CHH C-75	
2090	2090	1750	2090	2090	2090	1750	2090	1750	2090	1750	1750	T_{OUT}[kgf•m]	CHF C-80	**6235DA**
179000	179000	179000	179000	179000	179000	179000	179000	179000	179000	179000	179000	Pro[N]	CVV C-87	
18200	18200	18200	18200	18200	18200	18200	18200	18200	18200	18200	18200	Pro[kgf]		
-	-	-	-	-	-	-	-	-	-	-	-	P_1[kW]		
-	-	-	-	-	-	-	-	-	-	-	-	T_{OUT}[N•m]	CHH C-75	
-	-	-	-	-	-	-	-	-	-	-	-	T_{OUT}[kgf•m]	CHF C-80	**6235DB**
-	-	-	-	-	-	-	-	-	-	-	-	Pro[N]	CVV C-87	
-	-	-	-	-	-	-	-	-	-	-	-	Pro[kgf]		
1003	1247	1479	1849	2065	2537	3045	3481	4437	5133	6177	7569	Ratio [Z]	Page of Dim.	Frame Size
1.74	1.40	1.18	0.946	0.847	0.690	0.575	0.503	0.394	0.341	.0283	0.231	n_2 [r/min]		

Note: 3. Necessary input power for starting is printed in bold face. Do not exceed allowable output torque after startup.

Selection Tables 6000 Series Reducer

Double Reduction Ratio 104,121 ~ 7569 Frame Size: 6245DA ~ 6275DA

Input Speed	n_1 = 1750 r/min	n_1: Input Speed [r/min]	T_{out}: Allowable output torque [N·m, kgf·m]
		n_2: Output Speed [r/min]	Pro: Allowable output shaft radial load [N, kgf]
		P_1: Allowable input power [kW]	*Consult us for Pro of CNF and CHF type.

Frame Size	n_2 [r/min]	16.8	14.5	12.2	10.6	8.97	7.58	6.41	5.49	4.64	3.70	3.13	2.70	2.39	2.08
	Ratio [Z]	104	121	143	165	195	231	273	319	377	473	559	649	731	841
6245DA	P_1[kW]	-	-	-	25.4	23.9	22.7	19.2	16.5	13.9	11.1	9.40	8.09	7.19	6.25
	T_{OUT}[N•m]	-	-	-	20600	22900	25800	25800	25800	25800	25800	25800	25800	25800	25800
	T_{OUT}[kgf•m]	-	-	-	2100	2330	2630	2630	2630	2630	2630	2630	2630	2630	2630
	Pro[N]	-	-	-	160000	167000	179000	188000	196000	207000	208000	208000	208000	208000	208000
	Pro[kgf]	-	-	-	16300	17100	18200	19200	20000	21100	21200	21200	21200	21200	21200
6245DB	P_1[kW]	-	34.6	-	32.4	27.4	22.7	-	-	-	-	-	-	-	-
	T_{OUT}[N•m]	-	20500	-	26200	26200	25800	-	-	-	-	-	-	-	-
	T_{OUT}[kgf•m]	-	2090	-	2680	2680	2630	-	-	-	-	-	-	-	-
	Pro[N]	-	148000	-	158000	167000	179000	-	-	-	-	-	-	-	-
	Pro[kgf]	-	15000	-	16100	17000	18200	-	-	-	-	-	-	-	-
6255DA	P_1[kW]	-	31.8	-	31.8	31.8	27.3	23.1	20.7	17.5	14.9	12.6	10.8	9.61	7.86
	T_{OUT}[N•m]	-	18900	-	25800	30500	31000	31000	32500	32500	34500	34500	34500	34500	32500
	T_{OUT}[kgf•m]	-	1930	-	2630	3110	3160	3160	3310	3310	3520	3520	3520	3520	3310
	Pro[N]	-	182000	-	195000	204000	218000	229000	241000	254000	258000	258000	258000	258000	258000
	Pro[kgf]	-	18500	-	19900	20800	22200	23400	24600	25900	26300	26300	26300	26300	26300
6255DB	P_1[kW]	-	46.3	-	38.4	32.5	-	-	-	-	-	-	-	-	-
	T_{OUT}[N•m]	-	27500	-	31200	31200	-	-	-	-	-	-	-	-	-
	T_{OUT}[kgf•m]	-	2800	-	3180	3180	-	-	-	-	-	-	-	-	-
	Pro[N]	-	180000	-	194000	204000	-	-	-	-	-	-	-	-	-
	Pro[kgf]	-	18400	-	19800	20800	-	-	-	-	-	-	-	-	-
6265DA	P_1[kW]	-	50.8	-	50.8	45.7	40.5	34.3	29.4	24.8	19.8	16.8	14.4	12.8	11.1
	T_{OUT}[N•m]	-	30200	-	41100	43700	46000	46000	46000	46000	46000	46000	46000	46000	46000
	T_{OUT}[kgf•m]	-	3080	-	4190	4460	4690	4690	4690	4690	4690	4690	4690	4690	4690
	Pro[N]	-	221000	-	236000	248000	265000	276000	276000	276000	276000	276000	276000	276000	276000
	Pro[kgf]	-	22500	-	24100	25300	27000	28100	28100	28100	28100	28100	28100	28100	28100
6275DA	P_1[kW]	-	-	-	-	-	-	-	43.5	36.8	29.4	24.8	21.4	19.0	16.5
	T_{OUT}[N•m]	-	-	-	-	-	-	-	68200	68200	68200	68200	68200	68200	68200
	T_{OUT}[kgf•m]	-	-	-	-	-	-	-	6950	6950	6950	6950	6950	6950	6950
	Pro[N]	-	-	-	-	-	-	-	248000	248000	248000	248000	248000	248000	248000
	Pro[kgf]	-	-	-	-	-	-	-	25300	25300	25300	25300	25300	25300	25300
Frame Size	Ratio [Z]	104	121	143	165	195	231	273	319	377	473	559	649	731	841
	n_2 [r/min]	16.8	14.5	12.2	10.6	8.97	7.58	6.41	5.49	4.64	3.70	3.13	2.70	2.39	2.08

Note: 1. Allowable radial load Pro is the value at the midpoint of the output shaft. Refer to pages F-11~12 when radial load is off the midpoint of output shaft and for checking thrust load.
2. Refer to pages F-15~16 for allowable radial load for input shaft.

Selection Tables 6000 Series Reducer

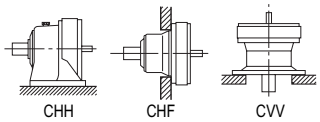

Input Speed	n_1 = 1750 r/min

1.74	1.40	1.18	0.946	0.847	0.690	0.575	0.503	0.394	0.341	0.283	0.231	n_2 [r/min]	Page of Dim.	Frame Size
1003	1247	1479	1849	2065	2537	3045	3481	4437	5133	6177	7569	Ratio [Z]		
5.24	4.21	3.12	2.84	2.54	**2.20**	**2.20**	**2.20**	**2.20**	**2.20**	**2.20**	**2.20**	P_1[kW]		
25800	25800	22600	25800	25800	25800	22600	25800	22600	25800	22600	22600	T_{OUT}[N•m]	CHH C-75	
2630	2630	2310	2630	2630	2630	2310	2630	2310	2630	2310	2310	T_{OUT}[kgf•m]	CHF C-80	**6245DA**
208000	208000	208000	208000	208000	208000	208000	208000	208000	208000	208000	208000	Pro[N]	CVV C-87	
21200	21200	21200	21200	21200	21200	21200	21200	21200	21200	21200	21200	Pro[kgf]		
-	-	-	-	-	-	-	-	-	-	-	-	P_1[kW]		
-	-	-	-	-	-	-	-	-	-	-	-	T_{OUT}[N•m]	CHH C-75	
-	-	-	-	-	-	-	-	-	-	-	-	T_{OUT}[kgf•m]	CHF C-80	**6245DB**
-	-	-	-	-	-	-	-	-	-	-	-	Pro[N]	CVV C-87	
-	-	-	-	-	-	-	-	-	-	-	-	Pro[kgf]		
7.00	5.63	4.27	3.80	**3.70**	**3.70**	**3.70**	**3.70**	**3.70**	**3.70**	**3.70**	**3.70**	P_1[kW]		
34500	34500	31000	34500	34500	34500	31000	34500	31000	34500	31000	31000	T_{OUT}[N•m]	CHH C-75	
3520	3520	3160	3520	3520	3520	3160	3520	3160	3520	3160	3160	T_{OUT}[kgf•m]	CHF C-80	**6255DA**
258000	258000	258000	258000	258000	258000	258000	258000	258000	258000	258000	258000	Pro[N]	CVV C-87	
26300	26300	26300	26300	26300	26300	26300	26300	26300	26300	26300	26300	Pro[kgf]		
-	-	-	-	-	-	-	-	-	-	-	-	P_1[kW]		
-	-	-	-	-	-	-	-	-	-	-	-	T_{OUT}[N•m]	CHH C-75	
-	-	-	-	-	-	-	-	-	-	-	-	T_{OUT}[kgf•m]	CHF C-80	**6255DB**
-	-	-	-	-	-	-	-	-	-	-	-	Pro[N]	CVV C-87	
-	-	-	-	-	-	-	-	-	-	-	-	Pro[kgf]		
9.34	7.51	6.06	**5.50**	**5.50**	**5.50**	**5.50**	**5.50**	**5.50**	**5.50**	**5.50**	**5.50**	P_1[kW]		
46000	46000	44000	46000	46000	46000	44000	46000	44000	46000	44000	44000	T_{OUT}[N•m]	CHH C-75	
4690	4690	4490	4690	4690	4690	4490	4690	4490	4690	4490	4490	T_{OUT}[kgf•m]	CHF C-80	**6265DA**
276000	276000	276000	276000	276000	276000	276000	276000	276000	276000	276000	276000	Pro[N]	CVV C-87	
28100	28100	28100	28100	28100	28100	28100	28100	28100	28100	28100	28100	Pro[kgf]		
13.8	11.1	9.39	7.51	**7.50**	**7.50**	**7.50**	**7.50**	**7.50**	**7.50**	**7.50**	**7.50**	P_1[kW]		
68200	68200	68200	68200	68200	68200	68200	68200	68200	68200	68200	68200	T_{OUT}[N•m]	CHH C-75	
6950	6950	6950	6950	6950	6950	6950	6950	6950	6950	6950	6950	T_{OUT}[kgf•m]		**6275DA**
248000	248000	245000	248000	248000	248000	245000	248000	245000	245000	245000	245000	Pro[N]	CVV C-87	
25300	25300	25000	25300	25300	25300	25000	25300	25000	25000	25000	25000	Pro[kgf]		
1003	1247	1479	1849	2065	2537	3045	3481	4437	5133	6177	7569	Ratio [Z]	Page of Dim.	Frame Size
1.74	1.40	1.18	0.946	0.847	0.690	0.575	0.503	0.394	0.341	.0283	0.231	n_2 [r/min]		

Note: 3. Necessary input power for starting is printed in bold face. Do not exceed allowable output torque after startup.

M E M O

C CYCLO® SPEED REDUCERS

3. Dimension Tables

Dimension Tables Speed Reducer (Horizontal Direction, Foot Mount)

CHH - 607□SK to 611□SK

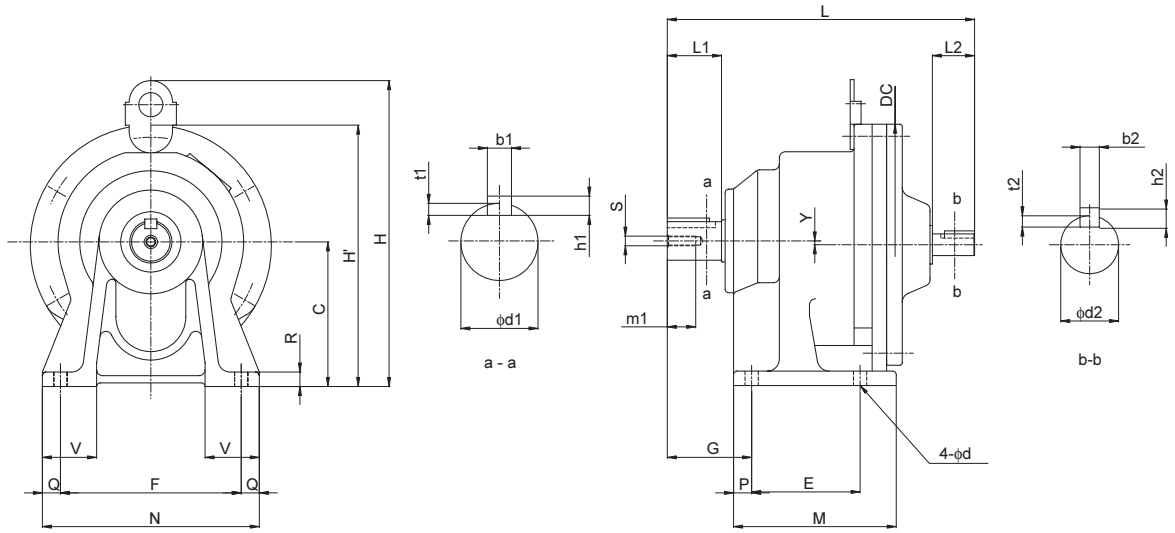

Frame Size Note: 1	L	C	DC	E	F	G	H	H'	M	N	P	Q	R	V	Y	d	W [kg]
607□SK	168	80	134	60	120	47	-	147	84	144	12	12	10	35	0	9	4
608□SK	200	90	150	75	120	52	-	165	99	144	12	12	13	37	0	9	5
609□SK	218	100	150	90	150	60	-	175	135	180	15	15	12	40	0	11	7
610□SK	218	100	162	90	150	60	216	-	135	180	15	15	12	40	0	11	8
611□SK	255	120	204	90	150	70	254	-	135	180	15	15	12	45	3	11	22

Model Note: 1	Output Shaft Note: 2, 3, 4							Input Shaft Note: 2, 3, 4				
	d1	L1	b1	h1	t1	S1	m1	d2	L2	b2	h2	t2
CHH - 607□SK - Ratio	18	30	6	6	3.5	M6	16	12	25	4	4	2.5
CHH - 608□SK - Ratio	22	35	6	6	3.5	M6	16	15	25	5	5	3
CHH - 609□SK - Ratio	28	35	8	7	4	M8	20	15	25	5	5	3
CHH - 610□SK - Ratio	28	35	8	7	4	M8	20	15	25	5	5	3
CHH - 611□SK - Ratio	32	45	10	8	5	M8	20	18	35	6	6	3.5

Note: 1. □ indicates 0 or 5, expressing combination with reduction ratio. Refer to the Selection Table for details.
2. Dimension of shaft end diameter: Dimension tolerance conforms to JIS B 0401-1976 "h6."
3. Dimension of shaft end key: Dimension tolerance conforms to JIS B 1301-1996 "Parallel Key."

Dimension Tables Speed Reducer (Universal Direction, Foot Mount)

CNH - 606□ to 612□

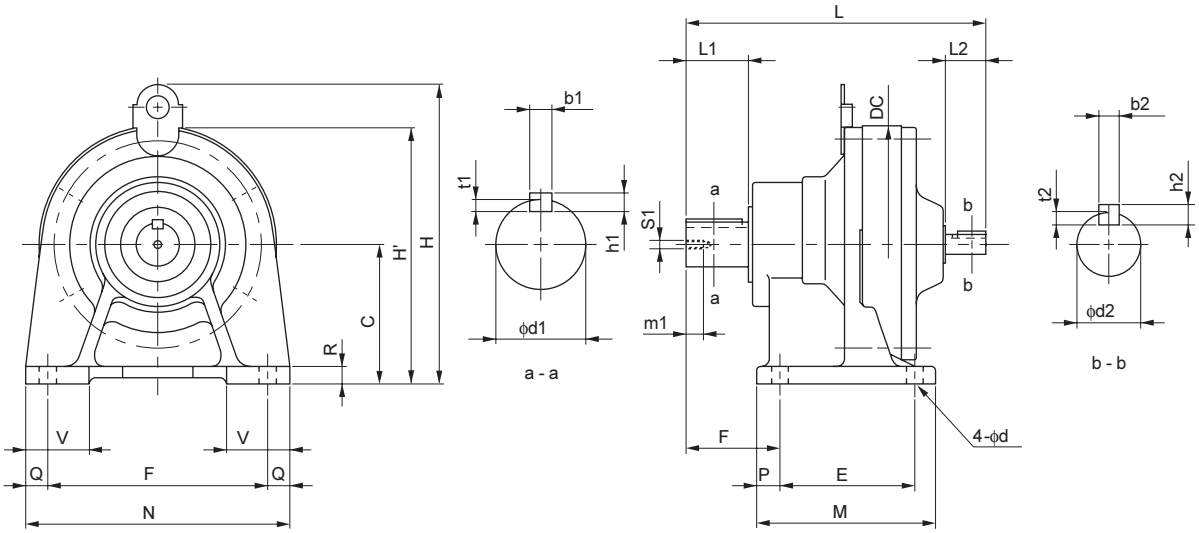

Frame Size Note: 1	L	C	DC	E	F	G	H	H'	M	N	P	Q	R	V	d	W [kg]
606□	145	80	110	60	120	41	-	135	84	144	12	12	10	35	9	2.5
607□	151	80	110	60	120	47	-	135	84	144	12	12	10	35	9	2.5
608□	179	90	134	75	120	52	-	157	99	144	12	12	13	37	9	8
609□	202	100	150	90	150	60	-	175	135	180	15	15	12	40	11	11
Note: 5 610□	208	100	150	90	150	60	207	-	135	180	15	15	12	40	11	13
611□	218	120	162	90	150	70	236	-	135	180	15	15	12	45	11	15
Note: 5 612□	259	120	204	115	190	82	257	-	155	230	20	20	15	55	14	24

Model Note: 1	Output Shaft Note: 2, 3, 4							Input Shaft Note: 2, 3, 4				
	d1	L1	b1	h1	t1	S1	m1	d2	L2	b2	h2	t2
CNH - 606□ - Ratio	14	25	5	5	3	M5	16	12	25	4	4	2.5
CNH - 607□ - Ratio	18	30	6	6	3.5	M6	16	12	25	4	4	2.5
CNH - 608□ - Ratio	22	35	6	6	3.5	M6	16	12	25	4	4	2.5
CNH - 609□ - Ratio	28	35	8	7	4	M8	20	15	25	5	5	3
Note: 5 CNH - 610□ - Ratio	28	35	8	7	4	M8	20	15	25	5	5	3
CNH - 611□ - Ratio	32	45	10	8	5	M8	20	15	25	5	5	3
Note: 5 CNH - 612□ - Ratio	38	55	10	8	5	M8	20	18	35	6	6	3.5

Note: 4. Refer to pages F-28~30 for details on input and output shaft end dimensions.
5. Refer to page C-88 for center height options available.
6. Dimensions in above drawings are subject to change without notice.

Dimension Tables Speed Reducer (Horizontal Direction, Foot Mount)

CHH - 613□ to 6275

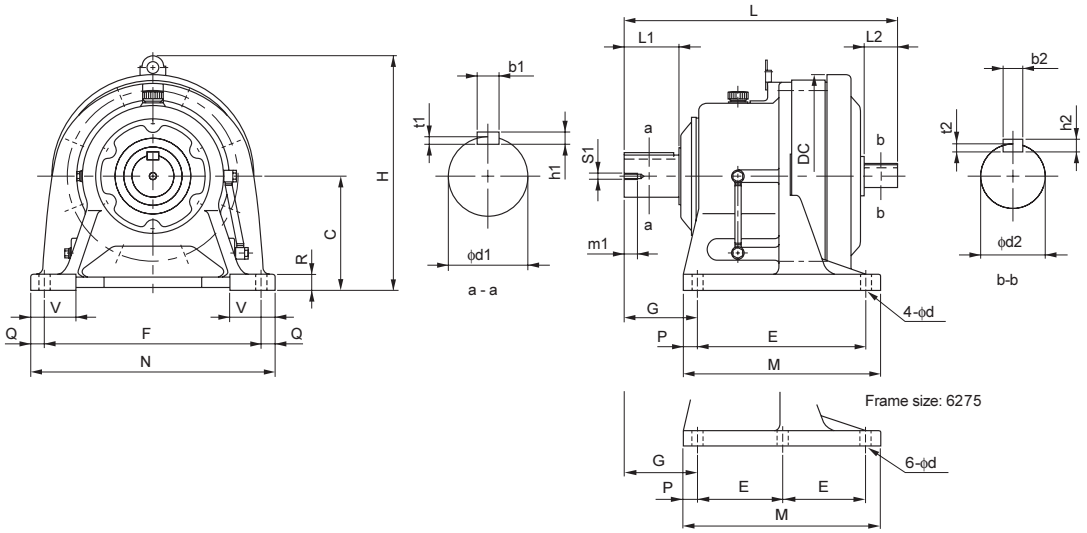

Frame Size Note: 1	L	C	DC	E	F	G	H	M	N	P	Q	R	V	d	W [kg]
613□	321	150	230	145	290	100	300	195	330	25	20	22	65	18	43
Note: 5 614□	341	150	230	145	290	120	300	195	330	25	20	22	65	18	44
Note: 5 616□	413	160	318	150	370	139	367	238	410	44	20	25	75	18	84
617□	477	200	362	275	380	125	429	335	430	30	25	30	80	22	125
618□	527	220	390	320	420	145	467	380	470	30	25	30	85	22	163
619□	620	250	451	380	480	170	539	440	530	30	25	35	90	26	240
6205	678	250	471	360	440	215	530	440	530	40	45	35	100	26	255
6215	708	265	507	395	480	210	575	475	580	40	50	40	110	26	336
6225	752	280	549	420	540	230	610	520	620	50	40	40	115	33	409
6235	839	300	591	460	580	260	667	560	670	50	45	45	120	33	503
6245	877	335	637	480	630	263	729	580	720	50	45	45	128	39	614
6255	1040	375	703	520	670	320	815	630	780	55	55	50	140	39	957
6265	1150	400	772	590	770	390	874	700	880	55	55	55	160	45	1190
6275	1462	540	986	420	1050	485	1161	1040	1160	100	55	60	200	45	2460

Model Note: 1	Output Shaft Note: 2, 3, 4							Input Shaft Note: 2, 3, 4				
	d1	L1	b1	h1	t1	S1	m1	d2	L2	b2	h2	t2
CHH - 613□ - Ratio	50	70	14	9	5.5	M10	18	22	40	6	6	3.5
Note: 5 CHH - 614□ - Ratio	50	90	14	9	5.5	M10	18	22	40	6	6	3.5
Note: 5 CHH - 616□ - Ratio	60	90	18	11	7	M10	18	30	45	8	7	4
CHH - 617□ - Ratio	70	90	20	12	7.5	M12	24	35	55	10	8	5
CHH - 618□ - Ratio	80	110	22	14	9	M12	24	40	65	12	8	5
CHH - 619□ - Ratio	95	135	25	14	9	M20	34	45	70	14	9	5.5
CHH - 6205 - Ratio	100	165	28	16	10	M20	34	45	82	14	9	5.5
CHH - 6215 - Ratio	110	165	28	16	10	M20	34	50	82	14	9	5.5
CHH - 6225 - Ratio	120	165	32	18	11	M20	34	55	82	16	10	6
CHH - 6235 - Ratio	130	200	32	18	11	M24	41	60	105	18	11	7
CHH - 6245 - Ratio	140	200	36	20	12	M24	41	65	105	18	11	7
CHH - 6255 - Ratio	160	240	40	22	13	M30	49	80	130	22	14	9
CHH - 6265 - Ratio	170	300	40	22	13	M30	49	80	130	22	14	9
CHH - 6275 - Ratio	180	330	45	25	15	M30	52	90	150	25	14	9

Note: 1. □ indicates 0 or 5, expressing combination with reduction ratio. Refer to the Selection Table for details.
2. Dimension of shaft end diameter: Dimension tolerance conforms to JIS B 0401-1976 "h6."
3. Dimension of shaft end key: Dimension tolerance conforms to JIS B 1301-1996 "Parallel Key."

Dimension Tables Speed Reducer (Universal Direction, Foot Mount)

CNH - 606□DA to 612□DB

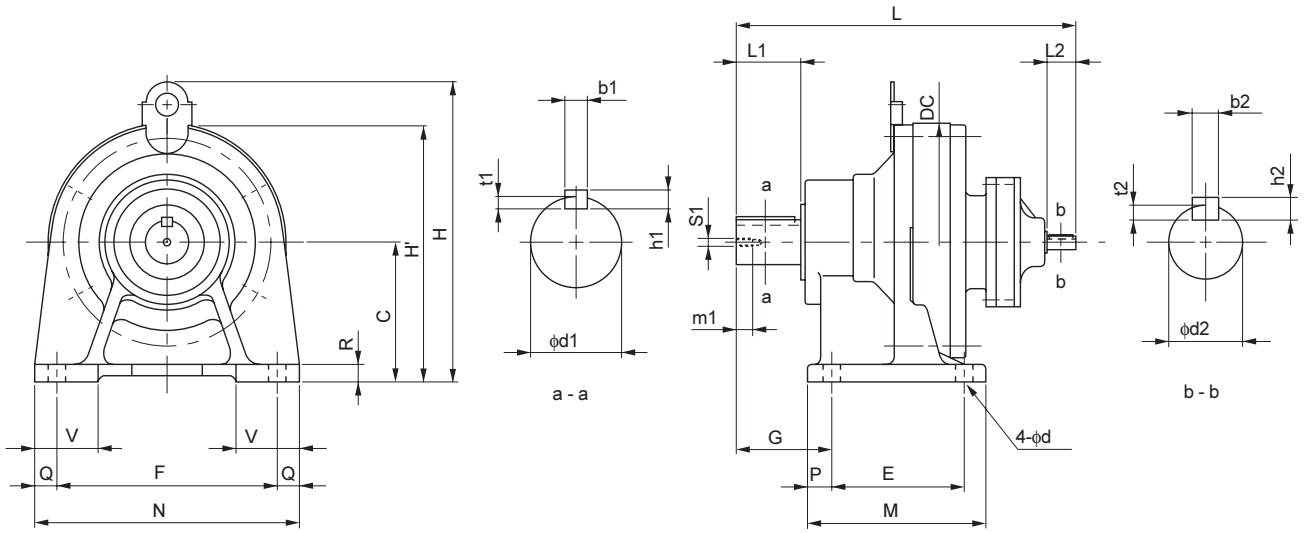

Frame Size Note: 1	L	C	DC	E	F	G	H	H'	M	N	P	Q	R	V	d	W [kg]
606□DA	178	80	110	60	120	41	-	135	84	144	12	12	10	35	9	4.0
607□DA	184	80	110	60	120	47	-	135	84	144	12	12	10	35	9	4.5
609□DA	243	100	150	90	150	60	-	175	135	180	15	15	12	40	11	12
610□DA	257	100	150	90	150	60	207	-	135	180	15	15	12	40	11	15
612□DA	293	120	204	115	190	82	257	-	155	230	20	20	15	55	14	26
612□DB	312	120	204	115	190	82	257	-	155	230	20	20	15	55	14	29

Model Note: 1	Output Shaft Note: 2, 3, 4							Input Shaft Note: 2, 3, 4				
	d1	L1	b1	h1	t1	S1	m1	d2	L2	b2	h2	t2
CNH - 606□DA - Ratio	14	25	5	5	3	M5	16	12	25	4	4	2.5
CNH - 607□DA - Ratio	18	30	6	6	3.5	M6	16	12	25	4	4	2.5
CNH - 609□DA - Ratio	28	35	8	7	4	M8	20	12	25	4	4	2.5
CNH - 610□DA - Ratio	28	35	8	7	4	M8	20	12	25	4	4	2.5
CNH - 612□DA - Ratio	38	55	10	8	5	M8	20	12	25	4	4	2.5
CNH - 612□DB - Ratio	38	55	10	8	5	M8	20	15	25	5	5	3

Note: 4. Refer to pages F-28~30 for details on input and output shaft end dimensions.
5. Refer to page C-88 for center height options available.
6. Dimensions in above drawings are subject to change without notice.

Dimension Tables Speed Reducer (Horizontal Direction, Foot Mount)

CHH - 613□DA to 618□DA

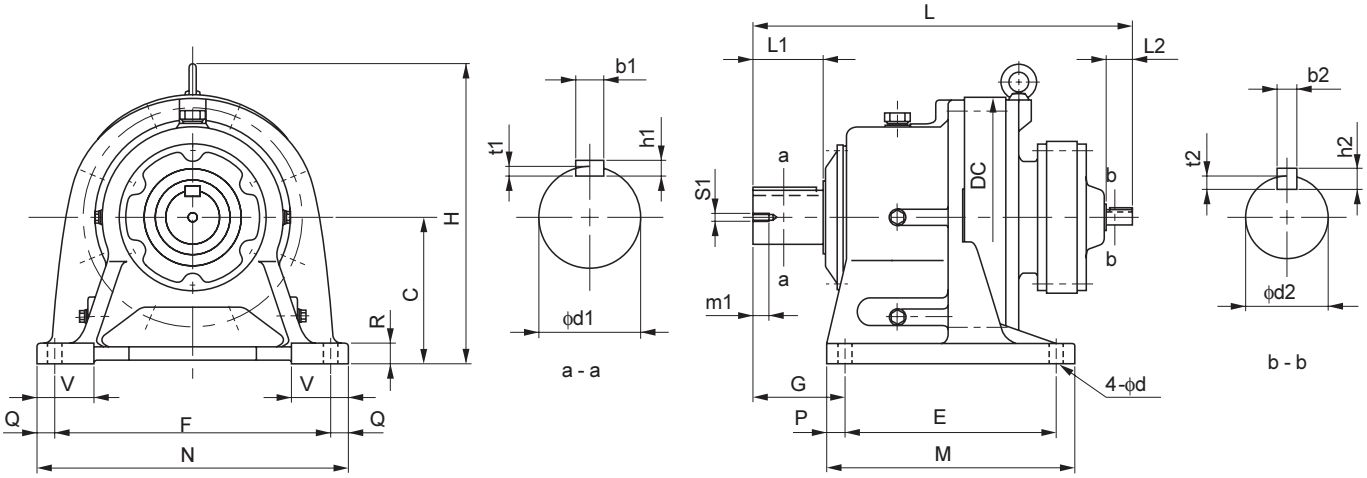

Frame Size Note: 1	L	C	DC	E	F	G	H	M	N	P	Q	R	V	d	W [kg]
613□DA	347	150	230	145	290	100	300	195	330	25	20	22	65	18	41
613□DB	363	150	230	145	290	100	300	195	330	25	20	22	65	18	45
613□DC	369	150	230	145	290	100	300	195	330	25	20	22	65	18	46
614□DA	367	150	230	145	290	120	300	195	330	25	20	22	65	18	41
614□DB	383	150	230	145	290	120	300	195	330	25	20	22	65	18	45
614□DC	389	150	230	145	290	120	300	195	330	25	20	22	65	18	46
616□DA	433	160	300	150	370	139	349	238	410	44	20	25	75	18	85
616□DB	439	160	300	150	370	139	349	238	410	44	20	25	75	18	87
617□DA	478	200	340	275	380	125	416	335	430	30	25	30	80	22	121
617□DB	484	200	340	275	380	125	416	335	430	30	25	30	80	22	123
618□DA	526	220	370	320	420	145	451	380	470	30	25	30	85	22	165

Model Note: 1	Output Shaft Note: 2, 3, 4							Input Shaft Note: 2, 3, 4				
	d1	L1	b1	h1	t1	S1	m1	d2	L2	b2	h2	t2
CHH - 613□DA - Ratio	50	70	14	9	5.5	M10	18	12	25	4	4	2.5
CHH - 613□DB - Ratio	50	70	14	9	5.5	M10	18	15	25	5	5	3
CHH - 613□DC - Ratio	50	70	14	9	5.5	M10	18	15	25	5	5	3
CHH - 614□DA - Ratio	50	90	14	9	5.5	M10	18	12	25	4	4	2.5
CHH - 614□DB - Ratio	50	90	14	9	5.5	M10	18	15	25	5	5	3
CHH - 614□DC - Ratio	50	90	14	9	5.5	M10	18	15	25	5	5	3
CHH - 616□DA - Ratio	60	90	18	11	7	M10	18	15	25	5	5	3
CHH - 616□DB - Ratio	60	90	18	11	7	M10	18	15	25	5	5	3
CHH - 617□DA - Ratio	70	90	20	12	7.5	M12	24	15	25	5	5	3
CHH - 617□DB - Ratio	70	90	20	12	7.5	M12	24	15	25	5	5	3
CHH - 618□DA - Ratio	80	110	22	14	9	M12	24	15	25	5	5	3

Note: 1. □ indicates 0 or 5, expressing combination with reduction ratio. Refer to the Selection Table for details.
2. Dimension of shaft end diameter: Dimension tolerance conforms to JIS B 0401-1976 "h6."
3. Dimension of shaft end key: Dimension tolerance conforms to JIS B 1301-1996 "Parallel Key."

Dimension Tables Speed Reducer (Horizontal Direction, Foot Mount)

CHH - 616□DC to 6275DA

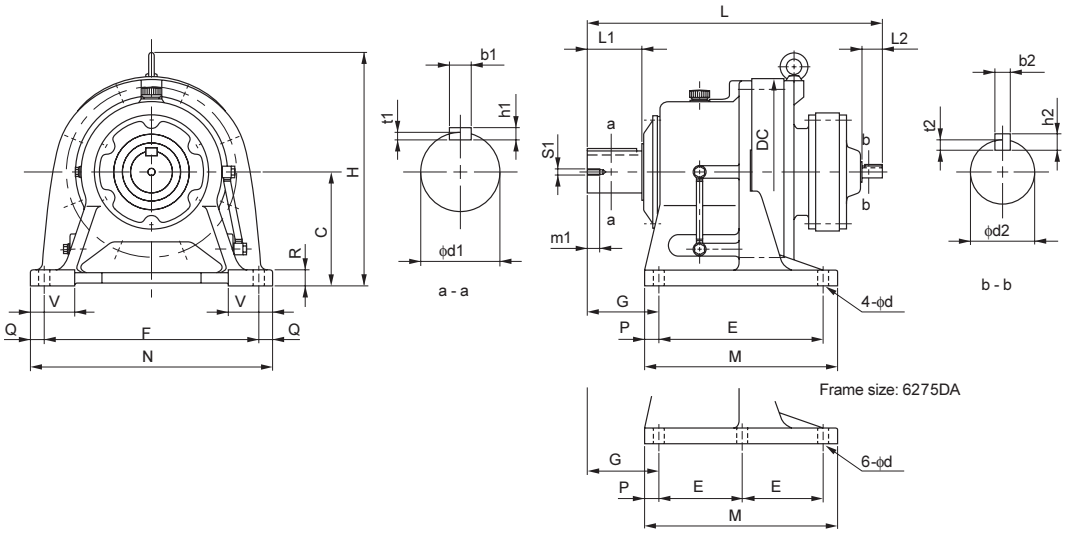

Frame Size Note: 1	L	C	DC	E	F	G	H	M	N	P	Q	R	V	d	W [kg]
616□DC	462	160	300	150	370	139	349	238	410	44	20	25	75	18	94
617□DC	509	200	340	275	380	125	416	335	430	30	25	30	80	22	128
618□DB	577	220	370	320	420	145	451	380	470	30	25	30	85	22	183
619□DA	629	250	430	380	480	170	531	440	530	30	25	35	90	26	241
619□DB	653	250	430	380	480	170	531	440	530	30	25	35	90	26	250
6205DA	670	250	448	360	440	215	530	440	530	40	45	35	100	26	260
6205DB	705	250	448	360	440	215	530	440	530	40	45	35	100	26	273
6215DA	731	265	485	395	480	210	575	475	580	40	50	40	110	26	354
6215DB	780	265	485	395	480	210	575	475	580	40	50	40	110	26	376
6225DA	773	280	526	420	540	230	610	520	620	50	40	40	115	33	429
6225DB	860	280	526	420	540	230	610	520	620	50	40	40	115	33	476
6235DA	883	300	562	460	580	260	667	560	670	50	45	45	120	33	548
6235DB	938	300	562	460	580	260	667	560	670	50	45	45	120	33	582
6245DA	921	335	614	480	630	263	729	580	720	50	45	45	128	39	656
6245DB	975	335	614	480	630	263	729	580	720	50	45	45	128	39	686
6255DA	1081	375	670	520	670	320	815	630	780	55	55	50	140	39	1010
6255DB	1133	375	670	520	670	320	815	630	780	55	55	50	140	39	1085
6265DA	1243	400	736	590	770	390	874	700	880	55	55	55	160	45	1340
6275DA	1504	540	950	420	1050	485	1161	1040	1160	100	55	60	200	45	2480

Model Note: 1	Output Shaft Note: 2, 3, 4							Input Shaft Note: 2, 3, 4				
	d1	L1	b1	h1	t1	S1	m1	d2	L2	b2	h2	t2
CHH - 616□DC - Ratio	60	90	18	11	7	M10	18	18	35	6	6	3.5
CHH - 617□DC - Ratio	70	90	20	12	7.5	M12	24	18	35	6	6	3.5
CHH - 618□DB - Ratio	80	110	22	14	9	M12	24	22	40	6	6	3.5
CHH - 619□DA - Ratio	95	135	25	14	9	M20	34	18	35	6	6	3.5
CHH - 619□DB - Ratio	95	135	25	14	9	M20	34	22	40	6	6	3.5
CHH - 6205DA - Ratio	100	165	28	16	10	M20	34	18	35	6	6	3.5
CHH - 6205DB - Ratio	100	165	28	16	10	M20	34	22	40	6	6	3.5
CHH - 6215DA - Ratio	110	165	28	16	10	M20	34	22	40	6	6	3.5
CHH - 6215DB - Ratio	110	165	28	16	10	M20	34	30	45	8	7	4
CHH - 6225DA - Ratio	120	165	32	18	11	M20	34	22	40	6	6	3.5
CHH - 6225DB - Ratio	120	165	32	18	11	M20	34	35	55	10	8	5
CHH - 6235DA - Ratio	130	200	32	18	11	M24	41	30	45	8	7	4
CHH - 6235DB - Ratio	130	200	32	18	11	M24	41	40	65	12	8	5
CHH - 6245DA - Ratio	140	200	36	20	12	M24	41	30	45	8	7	4
CHH - 6245DB - Ratio	140	200	36	20	12	M24	41	40	65	12	8	5
CHH - 6255DA - Ratio	160	240	40	22	13	M30	49	35	55	10	8	5
CHH - 6255DB - Ratio	160	240	40	22	13	M30	49	45	70	14	9	5.5
CHH - 6265DA - Ratio	170	300	40	22	13	M30	49	45	70	14	9	5.5
CHH - 6275DA - Ratio	180	330	45	25	15	M30	52	45	70	14	9	5.5

Note: 4. Refer to pages F-28~30 for details on input and output shaft end dimensions.
5. Dimensions in above drawings are subject to change without notice.

Dimension Tables Speed Reducer (Universal Direction, Flange Mount)

CNF - 606□ to 612□

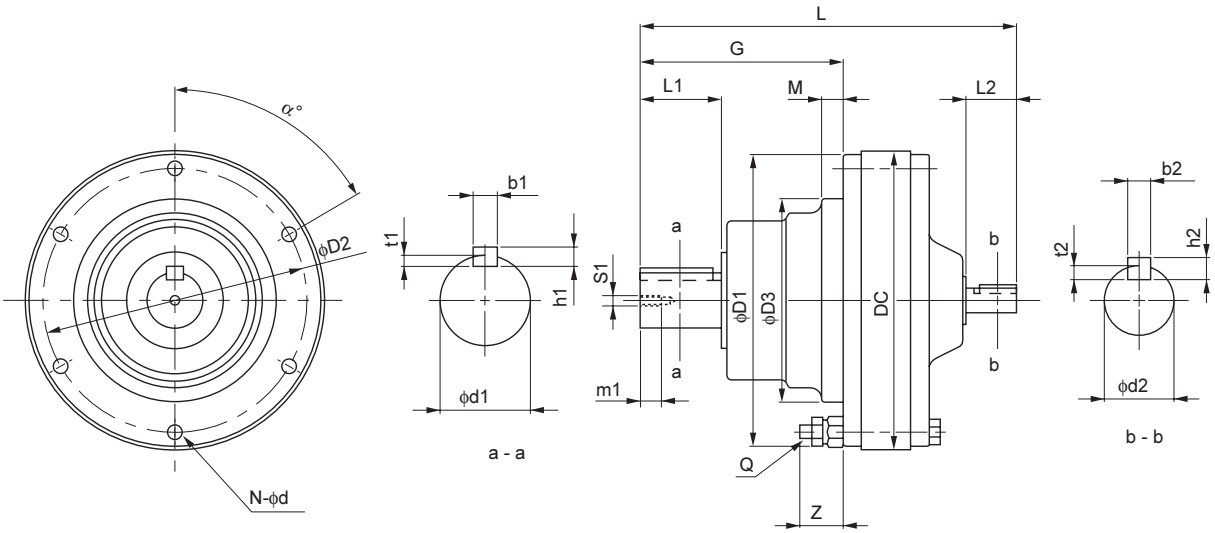

Frame Size Note: 1	L	G	D1	D2	D3 Note: 4	DC	Q	Z	M	N	d	α°	W [kg]
606□	145	68	110	98	80	110	M6	24	4	6	6.6	60	3
607□	151	74	110	98	80	110	M6	24	4	6	6.6	60	3
608□	178	91	134	118	95	134	M8	27	5	8	9	22.5	8
609□	202	114	150	134	105	150	M8	26	6	8	9	22.5	8.5
610□	208	114	150	134	105	150	M8	27	6	8	9	22.5	9.5
611□	218	118	162	146	115	162	M8	28	6	8	9	22.5	11
612□	259	139	200	180	140	204	M10	30	14	6	11	60	20

Model Note: 1	Output Shaft Note: 2, 3, 5							Input Shaft Note: 2, 3, 5				
	d1	L1	b1	h1	t1	S1	m1	d2	L2	b2	h2	t2
CNF - 606□ - Ratio	14	25	5	5	3	M5	16	12	25	4	4	2.5
CNF - 606□ - Ratio	18	30	6	6	3.5	M6	16	12	25	4	4	2.5
CNF - 608□ - Ratio	22	35	6	6	3.5	M6	16	12	25	4	4	2.5
CNF - 609□ - Ratio	28	35	8	7	4	M8	20	15	25	5	5	3
CNF - 610□ - Ratio	28	35	8	7	4	M8	20	15	25	5	5	3
CNF - 611□ - Ratio	32	45	10	8	5	M8	20	15	25	5	5	3
CNF - 612□ - Ratio	38	55	10	8	5	M8	20	18	35	6	6	3.5

Note: 1. □ indicates 0 or 5, expressing combination with reduction ratio. Refer to the Selection Table for details.
2. Dimension of shaft end diameter: Dimension tolerance conforms to JIS B 0401-1976 "h6."
3. Dimension of shaft end key: Dimension tolerance conforms to JIS B 1301-1996 "Parallel Key."

Dimension Tables Speed Reducer (Horizontal Direction, Flange Mount)

CHF - 613□ to 6265

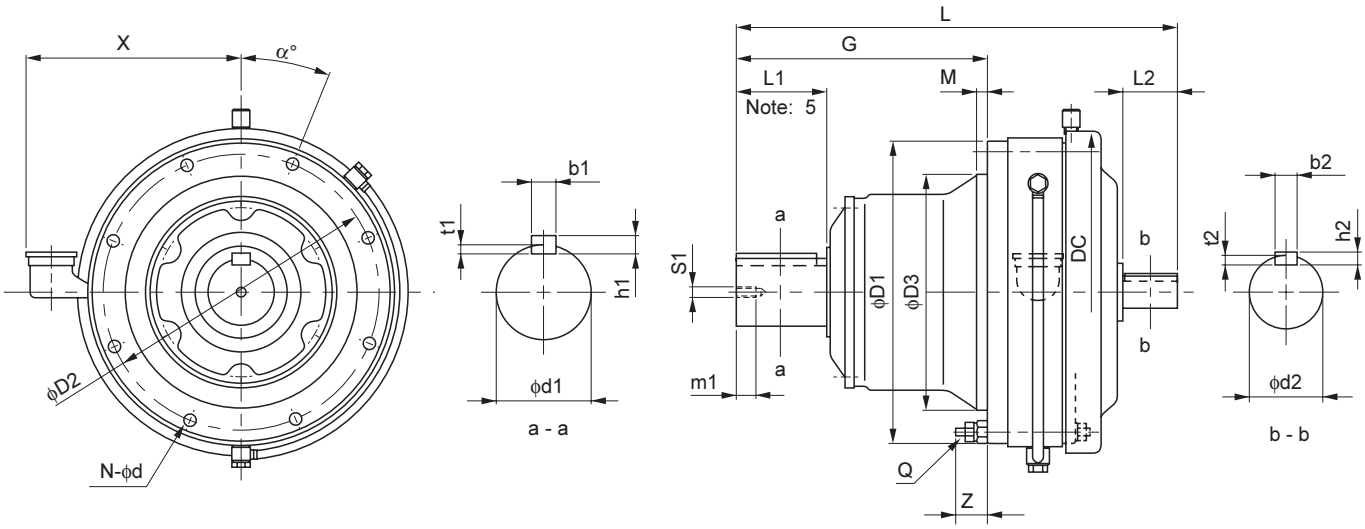

Frame Size Note: 1	L	G	D1	D2	D3 Note: 4	DC	Q	Z	M	N	d	α°	x	W [kg]
613□	321	178	226	205	165	230	M10	31	16	6	11	60	208	36
614□	341	198	226	205	165	230	M10	31	16	6	11	60	208	37
616□	413	222	296	270	200	318	M12	35	10	6	14	30	228	66
617□	477	262	330	300	250	362	M12	41	12	8	14	22.5	243	96
618□	527	299	360	330	280	390	M12	38	12	8	14	22.5	258	131
619□	620	365	420	380	320	451	M12	43	10	12	14	15	285	195
6205	678	410	443	405	360	471	M16	57	20	12	18	15	-	213
6215	708	423	480	440	390	507	M18	57	20	12	20.5	15	-	292
6225	752	454	521	475	420	549	M20	65	20	12	22	15	-	347
6235	839	505	557	510	455	591	M20	68	20	12	22	15	-	428
6245	877	529	615	560	500	637	M24	65	25	12	27	15	-	538
6255	1040	616	666	610	540	703	M24	88	30	12	27	15	-	794
6265	1150	712	730	660	570	772	M30	82	40	12	34	15	-	1020

Model Note: 1	Output Shaft Note: 2, 3, 5							Input Shaft Note: 2, 3, 5				
	d1	L1	b1	h1	t1	S1	m1	d2	L2	b2	h2	t2
CHF - 613□ - Ratio	50	70	14	9	5.5	M10	18	22	40	6	6	3.5
CHF - 614□ - Ratio	50	90	14	9	5.5	M10	18	22	40	6	6	3.5
CHF - 616□ - Ratio	60	90	18	11	7	M10	18	30	45	8	7	4
CHF - 617□ - Ratio	70	90	20	12	7.5	M12	24	35	55	10	8	5
CHF - 618□ - Ratio	80	110	22	14	9	M12	24	40	65	12	8	5
CHF - 619□ - Ratio	95	135	25	14	9	M20	34	45	70	14	9	5.5
CHF - 6205 - Ratio	100	165	28	16	10	M20	34	45	82	14	9	5.5
CHF - 6215 - Ratio	110	165	28	16	10	M20	34	50	82	14	9	5.5
CHF - 6225 - Ratio	120	165	32	18	11	M20	34	55	82	16	10	6
CHF - 6235 - Ratio	130	200	32	18	11	M24	41	60	105	18	11	7
CHF - 6245 - Ratio	140	200	36	20	12	M24	41	65	105	18	11	7
CHF - 6255 - Ratio	160	240	40	22	13	M30	49	80	130	22	14	9
CHF - 6265 - Ratio	170	300	40	22	13	M30	49	80	130	22	14	9

Note: 4. Pilot diameter (ϕD3): Dimension tolerance conforms to JIS B 0401-1976 "g6."
5. Output shaft length differs from the values in the above table for vertical output shaft down (CVF) type. Refer to pages F-28~30 for details on input and output shaft end dimensions.
6. Dimensions in above drawings are subject to change without notice.

Dimension Tables Speed Reducer (Universal Direction, Flange Mount)

CNF - 606□DA to 612□DB

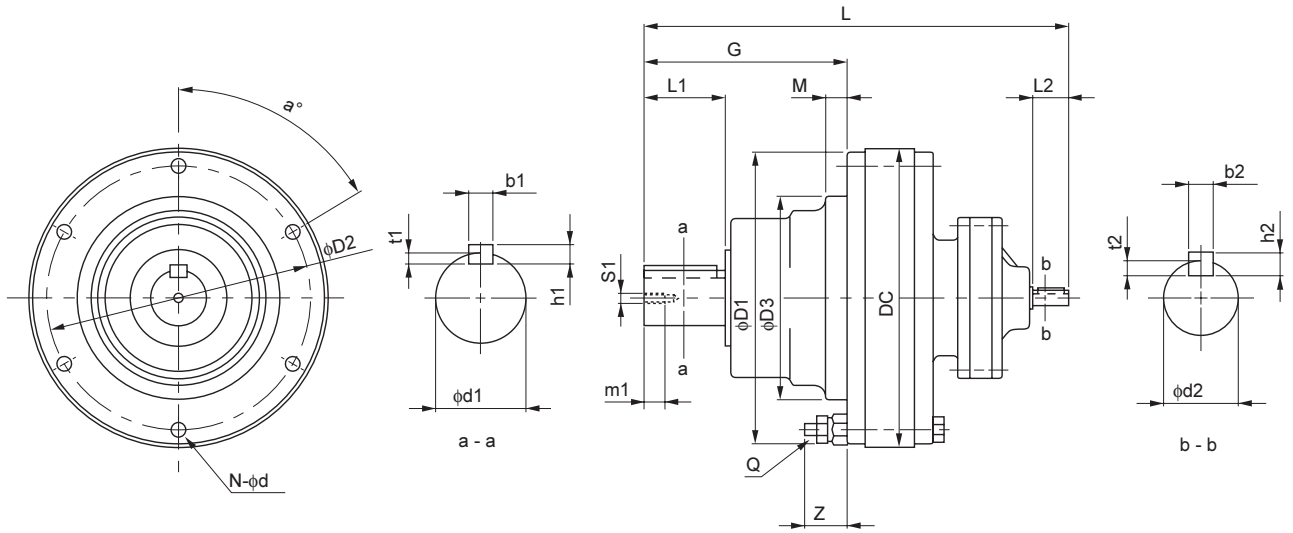

Frame Size Note: 1	L	G	D1	D2	D3 Note: 4	DC	Q	Z	M	N	d	α°	W [kg]
606□DA	178	68	110	98	80	110	M6	26	4	6	6.6	60	4.5
607□DA	184	74	110	98	80	110	M6	26	4	6	6.6	60	4.5
609□DA	243	114	150	134	105	150	M8	26	6	8	9	22.5	10
610□DA	257	114	150	134	105	150	M8	27	6	8	9	22.5	12
612□DA	293	139	200	180	140	204	M10	30	14	6	11	60	22
612□DB	312	139	200	180	140	204	M10	30	14	6	11	60	25

Model Note: 1	Output Shaft Note: 2, 3, 5							Input Shaft Note: 2, 3, 5				
	d1	L1	b1	h1	t1	S1	m1	d2	L2	b2	h2	t2
CNF - 606□DA - Ratio	14	25	5	5	3	M5	16	12	25	4	4	2.5
CNF - 607□DA - Ratio	18	30	6	6	3.5	M6	16	12	25	4	4	2.5
CNF - 609□DA - Ratio	28	35	8	7	4	M8	20	12	25	4	4	2.5
CNF - 610□DA - Ratio	28	35	8	7	4	M8	20	12	25	4	4	2.5
CNF - 612□DA - Ratio	38	55	10	8	5	M8	20	12	25	4	4	2.5
CNF - 612□DB - Ratio	38	55	10	8	5	M8	20	15	25	5	5	3

Note: 1. □ indicates 0 or 5, expressing combination with reduction ratio. Refer to the Selection Table for details.
2. Dimension of shaft end diameter: Dimension tolerance conforms to JIS B 0401-1976 "h6."
3. Dimension of shaft end key: Dimension tolerance conforms to JIS B 1301-1996 "Parallel Key."

Dimension Tables Speed Reducer (Universal Direction, Flange Mount)

CHF - 613□DA to 618□DA

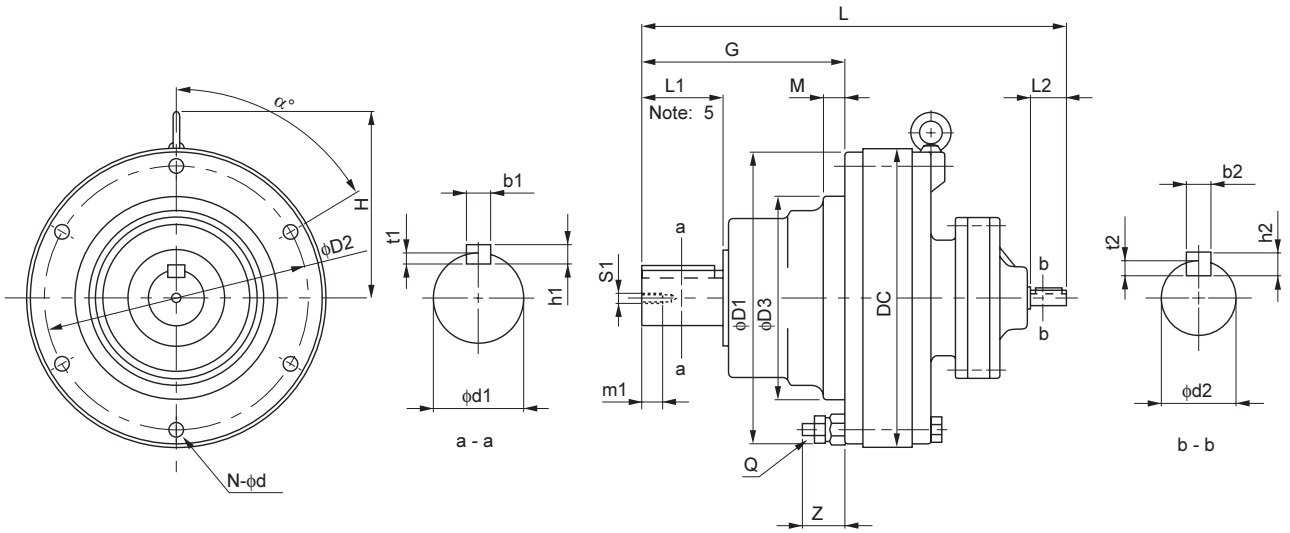

Frame Size Note: 1	L	G	D1	D2	D3 Note: 4	DC	H	Q	Z	M	N	d	α°	W [kg]
613□DA	347	178	226	205	165	230	150	M10	31	16	6	11	60	36
613□DB	363	178	226	205	165	230	150	M10	31	16	6	11	60	39
613□DC	369	178	226	205	165	230	150	M10	31	16	6	11	60	40
614□DA	367	198	226	205	165	230	150	M10	31	16	6	11	60	36
614□DB	383	198	226	205	165	230	150	M10	31	16	6	11	60	39
614□DC	389	198	226	205	165	230	150	M10	31	16	6	11	60	40
616□DA	433	222	296	270	200	300	189	M12	35	10	6	14	30	68
616□DB	439	222	296	270	200	300	189	M12	35	10	6	14	30	70
617□DA	478	262	330	300	250	340	216	M12	41	12	8	14	22.5	93
617□DB	484	262	330	300	250	340	216	M12	41	12	8	14	22.5	95
618□DA	526	299	360	330	280	370	231	M12	38	12	8	14	22.5	129

Model Note: 1	Output Shaft Note: 2, 3, 5							Input Shaft Note: 2, 3, 5				
	d1	L1	b1	h1	t1	S1	m1	d2	L2	b2	h2	t2
CHF - 613□DA - Ratio	50	70	14	9	5.5	M10	18	12	25	4	4	2.5
CHF - 613□DB - Ratio	50	70	14	9	5.5	M10	18	15	25	5	5	3
CHF - 613□DC - Ratio	50	70	14	9	5.5	M10	18	15	25	5	5	3
CHF - 614□DA - Ratio	50	90	14	9	5.5	M10	18	12	25	4	4	2.5
CHF - 614□DB - Ratio	50	90	14	9	5.5	M10	18	15	25	5	5	3
CHF - 614□DC - Ratio	50	90	14	9	5.5	M10	18	15	25	5	5	3
CHF - 616□DA - Ratio	60	90	18	11	7	M10	18	15	25	5	5	3
CHF - 616□DB - Ratio	60	90	18	11	7	M10	18	15	25	5	5	3
CHF - 617□DA - Ratio	70	90	20	12	7.5	M12	24	15	25	5	5	3
CHF - 617□DB - Ratio	70	90	20	12	7.5	M12	24	15	25	5	5	3
CHF - 618□DA - Ratio	80	110	22	14	9	M12	24	15	25	5	5	3

Note: 4. Pilot diameter (φD3): Dimension tolerance conforms to JIS B 0401-1976 "g6."
5. Output shaft length differs from the values in the above table for vertical output shaft down (CVF) type. Refer to pages F-28~30 for details on input and output shaft end dimensions.
6. Dimensions in above drawings are subject to change without notice.

Dimension Tables Speed Reducer (Horizontal Direction, Flange Mount)

CHF - 616□DC to 6265DA

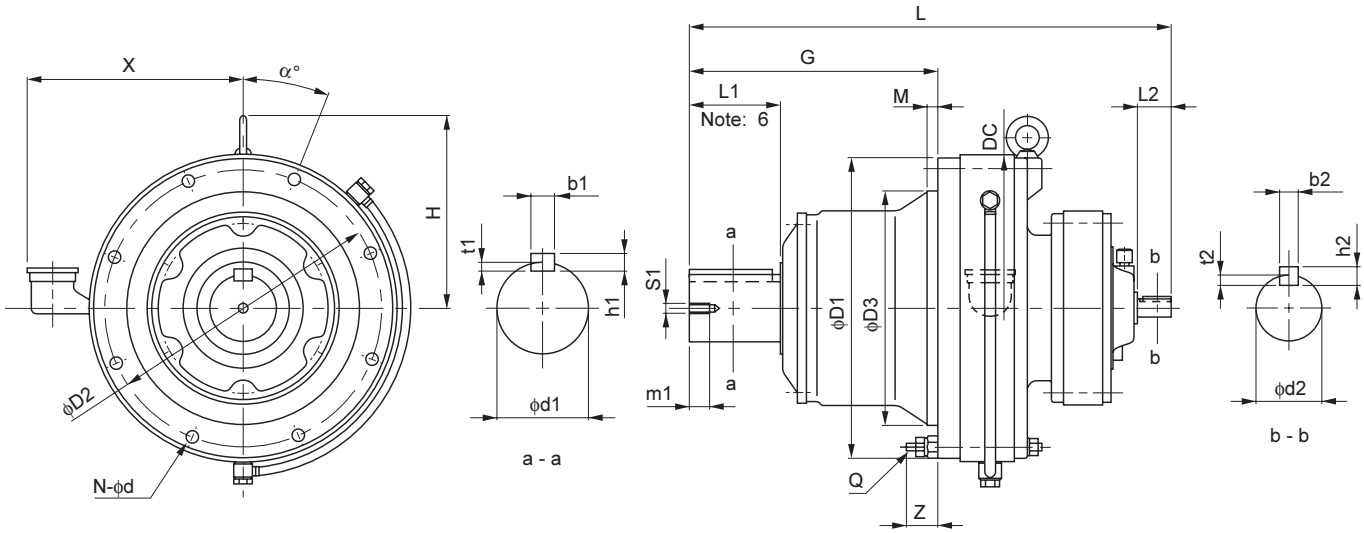

Frame Size Note: 1	L	G	D1	D2	D3 Note: 4	DC	H	Q	Z	M	N	d	α°	x	W [kg]
616□DC	462	222	296	270	200	300	189	M12	35	10	6	14	30	228	82
617□DC	509	262	330	300	250	340	216	M12	41	12	8	14	22.5	243	105
618□DB	577	299	360	330	280	370	231	M12	38	12	8	14	22.5	258	146
619□DA	629	365	420	380	320	430	281	M12	43	10	12	14	15	285	201
619□DB	653	365	420	380	320	430	281	M12	43	10	12	14	15	285	205
6205DA	670	410	443	405	360	448	283	M16	57	20	12	18	15	-	217
6205DB	705	410	443	405	360	448	283	M16	57	20	12	18	15	-	227
6215DA	731	423	480	440	390	485	312	M18	57	20	12	20.5	15	-	306
6215DB	780	423	480	440	390	485	312	M18	57	20	12	20.5	15	-	328
6225DA	773	454	521	475	420	526	333	M20	65	20	12	22	15	-	357
6225DB	860	454	521	475	420	526	333	M20	65	20	12	22	15	-	404
6235DA	883	505	557	510	455	562	351	M20	68	20	12	22	15	-	468
6235DB	938	505	557	510	455	562	351	M20	68	20	12	22	15	-	500
6245DA	921	529	615	560	500	614	395	M24	65	25	12	27	15	-	574
6245DB	975	529	615	560	500	614	395	M24	65	25	12	27	15	-	603
6255DA	1081	616	666	610	540	670	386	M24	88	30	12	27	15	-	847
6255DB	1133	616	666	610	540	670	386	M24	88	30	12	27	15	-	926
6265DA	1243	712	730	660	570	736	453	M30	82	40	12	34	15	-	1170

Model Note: 1	Output Shaft Note: 2, 3, 6							Input Shaft Note: 2, 3, 6				
	d1	L1	b1	h1	t1	S1	m1	d2	L2	b2	h2	t2
CHF - 616□DC - Ratio	60	90	18	11	7	M10	18	18	35	6	6	3.5
CHF - 617□DC - Ratio	70	90	20	12	7.5	M12	24	18	35	6	6	3.5
CHF - 618□DB - Ratio	80	110	22	14	9	M12	24	22	40	6	6	3.5
CHF - 619□DA - Ratio	95	135	25	14	9	M20	34	18	35	6	6	3.5
CHF - 619□DB - Ratio	95	135	25	14	9	M20	34	22	40	6	6	3.5
CHF - 6205DA - Ratio	100	165	28	16	10	M20	34	18	35	6	6	3.5
CHF - 6205DB - Ratio	100	165	28	16	10	M20	34	22	40	6	6	3.5
CHF - 6215DA - Ratio	110	165	28	16	10	M20	34	22	40	6	6	3.5
CHF - 6215DB - Ratio	110	165	28	16	10	M20	34	30	45	8	7	4
CHF - 6225DA - Ratio	120	165	32	18	11	M20	34	22	40	6	6	3.5
CHF - 6225DB - Ratio	120	165	32	18	11	M20	34	35	55	10	8	5
CHF - 6235DA - Ratio	130	200	32	18	11	M24	41	30	45	8	7	4
CHF - 6235DB - Ratio	130	200	32	18	11	M24	41	40	65	12	8	5
CHF - 6245DA - Ratio	140	200	36	20	12	M24	41	30	45	8	7	4
CHF - 6245DB - Ratio	140	200	36	20	12	M24	41	40	65	12	8	5
CHF - 6255DA - Ratio	160	240	40	22	13	M30	49	35	55	10	8	5
CHF - 6255DB - Ratio	160	240	40	22	13	M30	49	45	70	14	9	5.5
CHF - 6265DA - Ratio	170	300	40	22	13	M30	49	45	70	14	9	5.5

Note: 1. □ indicates 0 or 5, expressing combination with reduction ratio. Refer to the Selection Table for details.
2. Dimension of shaft end diameter: Dimension tolerance conforms to JIS B 0401-1976 "h6."
3. Dimension of shaft end key: Dimension tolerance conforms to JIS B 1301-1996 "Parallel Key."
4. Pilot diameter (φD3) of CHF type: Dimension tolerance conforms to JIS B 0401-1976 "g6."
5. Pilot diameter (φD3) of CVV type: Dimension tolerance conforms to JIS B 0401-1976 "f8."

Dimension Tables Speed Reducer (Vertical, Slow Speed Shaft Down, V-Flange Mount)

CVV - 607□SK to 611□SK

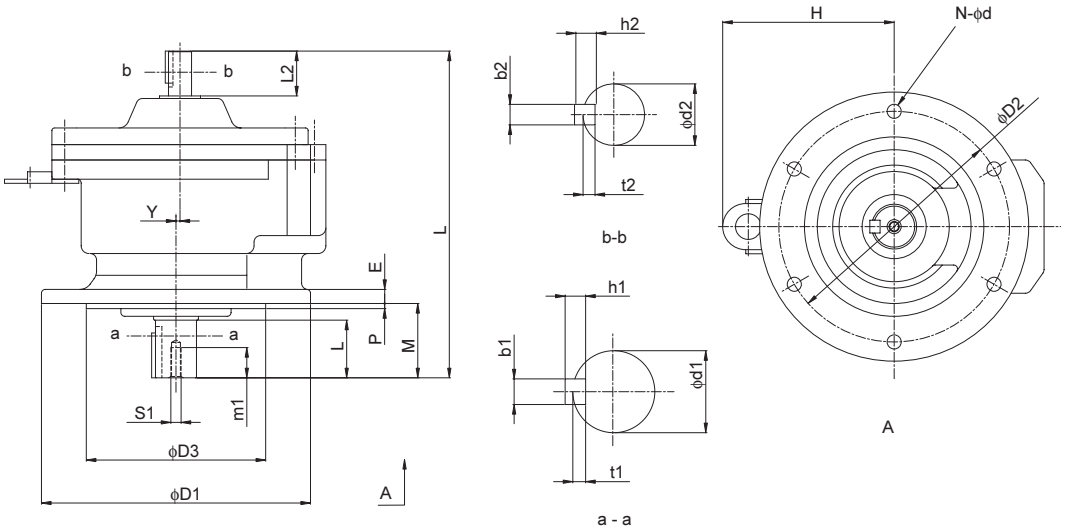

Frame Size Note: 1	L	D1	D2	D3 Note: 5	H	M	E	P	Y	N	d	W [kg]
607□SK	168	160	134	110	-	42	9	3	0	4	11	6
608□SK	200	160	134	110	-	48	9	3	0	4	11	7
609□SK	218	160	134	110	-	48	9	3	0	4	11	9
610□SK	218	160	134	110	116	48	9	3	0	4	11	10
611□SK	255	210	180	140	134	58	11	4	3	6	11	22

Model Note: 1	Output Shaft Note: 2, 3							Input Shaft Note: 2, 3				
	d1	L1	b1	h1	t1	S1	m1	d2	L2	b2	h2	t2
CVV - 607□SK - Ratio	18	30	6	6	3.5	M6	16	12	25	4	4	2.5
CVV - 608□SK - Ratio	22	35	6	6	3.5	M6	16	15	25	5	5	3
CVV - 609□SK - Ratio	28	35	8	7	4	M8	20	15	25	5	5	3
CVV - 610□SK - Ratio	28	35	8	7	4	M8	20	15	25	5	5	3
CVV - 611□SK - Ratio	32	45	10	8	5	M8	20	18	35	6	6	3.5

Note: 6. Output shaft length differs from the values in the above table for vertical output shaft down (CVF) type. Refer to pages F-28~30 for details on input and output shaft end dimensions.
7. Dimensions in above drawings are subject to change without notice.

Dimension Tables Speed Reducer (Universal Direction, V-Flange Mount)

CNV - 606□ to 612□

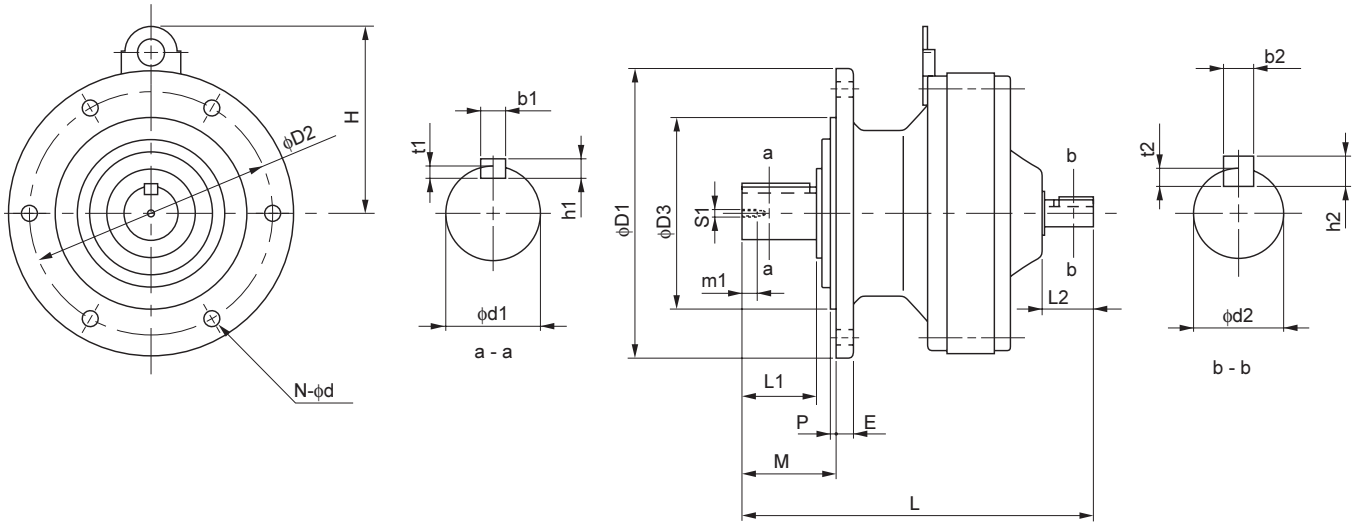

Frame Size Note: 1	L	D1	D2	D3 Note: 4	H	M	E	P	N	d	W [kg]
606□	145	120	102	80	-	34	8	3	6	9	3.5
607□	151	160	134	110	-	42	9	3	4	11	4.5
608□	179	160	134	110	-	48	9	3	4	11	8
609□	202	160	134	110	107	48	9	3	4	11	9
610□	208	160	134	110	107	48	9	3	4	11	11
611□	218	210	180	140	116	58	11	4	6	11	13
612□	259	210	180	140	137	69	13	4	6	11	23

Model Note: 1	Output Shaft Note: 2, 3							Input Shaft Note: 2, 3				
	d1	L1	b1	h1	t1	S1	m1	d2	L2	b2	h2	t2
CNV - 606□ - Ratio	14	25	5	5	3	M5	16	12	25	4	4	2.5
CNV - 607□ - Ratio	18	30	6	6	3.5	M6	16	12	25	4	4	2.5
CNV - 608□ - Ratio	22	35	6	6	3.5	M6	16	12	25	4	4	2.5
CNV - 609□ - Ratio	28	35	8	7	4	M8	20	15	25	5	5	3
CNV - 610□ - Ratio	28	35	8	7	4	M8	20	15	25	5	5	3
CNV - 611□ - Ratio	32	45	10	8	5	M8	20	15	25	5	5	3
CNV - 612□ - Ratio	38	55	10	8	5	M8	20	18	35	6	6	3.5

Note: 1. □ indicates 0 or 5, expressing combination with reduction ratio. Refer to the Selection Table for details.
2. Dimension of shaft end diameter: Dimension tolerance conforms to JIS B 0401-1976 "h6."
3. Dimension of shaft end key: Dimension tolerance conforms to JIS B 1301-1996 "Parallel Key."

Dimension Tables Speed Reducer (Vertical, Slow Speed Shaft Down, V-Flange Mount)

CVV - 613□ to 614□

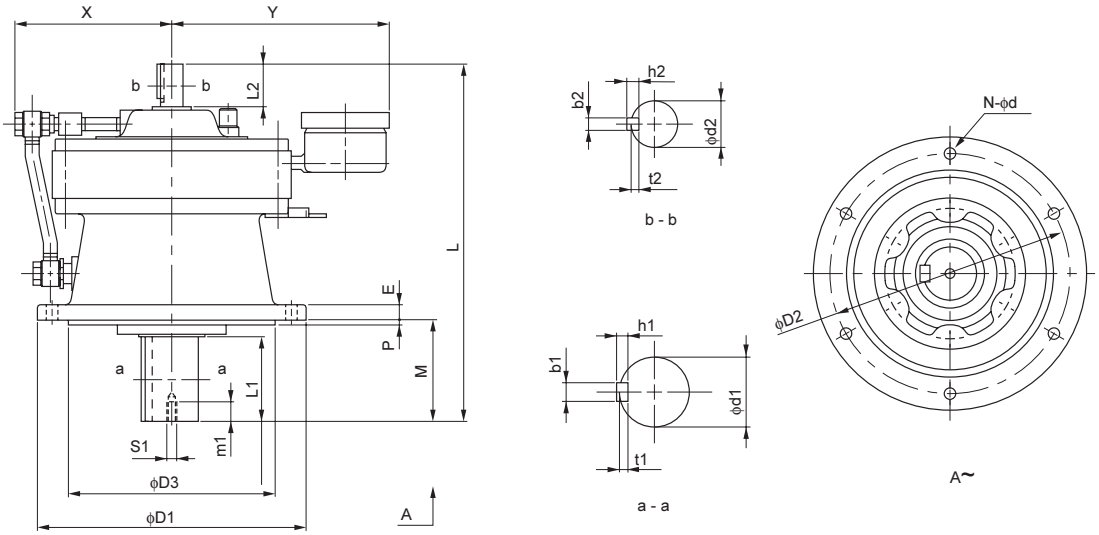

Frame Size Note: 1	L	D1	D2	D3 Note: 4	M	E	P	N	d	X	Y	W [kg]
613□	321	260	230	200	76	15	4	6	11	152	233	42
614□	341	260	230	200	96	15	4	6	11	152	233	43

Model Note: 1	Output Shaft Note: 2, 3							Input Shaft Note: 2, 3				
	d1	L1	b1	h1	t1	S1	m1	d2	L2	b2	h2	t2
CVV - 613□ - Ratio	50	61	14	9	5.5	M10	18	22	40	6	6	3.5
CVV - 614□ - Ratio	50	81	14	9	5.5	M10	18	22	40	6	6	3.5

Note: 4. Pilot diameter (ϕD3): Dimension tolerance conforms to JIS B 0401-1976 "f8."
5. Dimensions in above drawings are subject to change without notice.

Dimension Tables Speed Reducer (Vertical, Slow Speed Shaft Down, V-Flange Mount)

CVV - 616□ to 6275

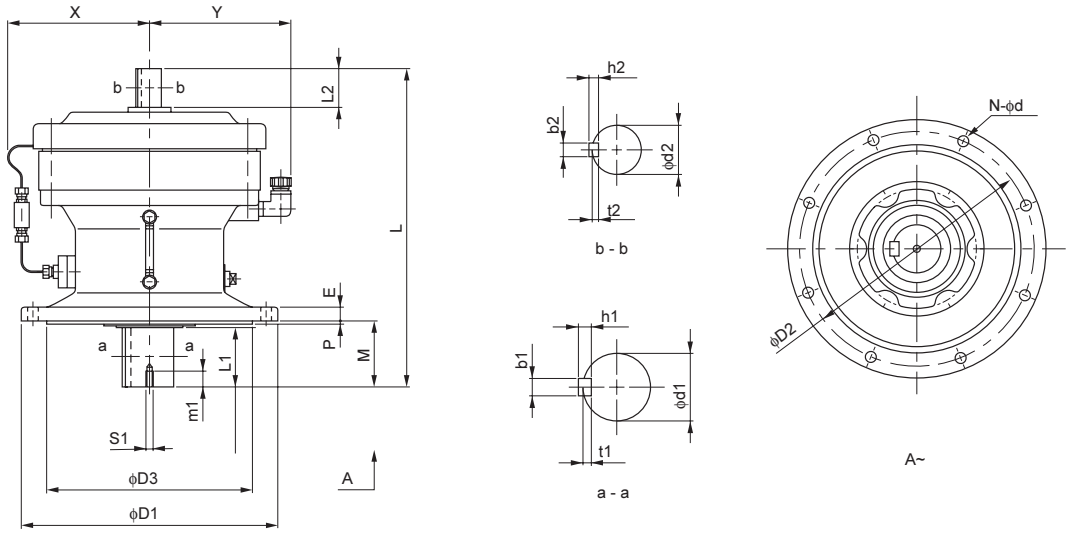

Frame Size Note: 1	L	D1	D2	D3 Note: 4	M	E	P	N	d	X	Y	W [kg]
616□	413	340	310	270	89	20	4	6	11	217	200	79
617□	477	400	360	316	94	22	5	8	14	222	225	125
618□	527	430	390	345	110	22	5	8	18	237	240	150
619□	620	490	450	400	145	30	6	12	18	265	270	225
6205	678	455	405	355	204	30	5	8	22	341	287	243
6215	708	490	440	390	203	35	7	8	24	348	306	314
6225	752	535	475	415	210	35	10	8	27	352	326	396
6235	839	570	510	450	250	40	10	8	27	359	344	474
6245	877	635	560	485	250	40	10	8	33	370	371	568
6255	1040	685	610	535	295	45	10	8	33	426	399	865
6265	1150	750	660	570	360	50	10	8	39	460	431	1125
6275	1462	1160	1020	900	355	60	10	8	39	610	613	2610

Model Note: 1	Output Shaft Note: 2, 3							Input Shaft Note: 2, 3				
	d1	L1	b1	h1	t1	S1	m1	d2	L2	b2	h2	t2
CVV - 616□ - Ratio	60	80	18	11	7	M10	18	30	45	8	7	4
CVV - 617□ - Ratio	70	84	20	12	7.5	M12	24	35	55	10	8	5
CVV - 618□ - Ratio	80	100	22	14	9	M12	24	40	65	12	8	5
CVV - 619□ - Ratio	95	125	25	14	9	M20	34	45	70	14	9	5.5
CVV - 6205 - Ratio	100	165	28	16	10	M20	34	45	82	14	9	5.5
CVV - 6215 - Ratio	110	165	28	16	10	M20	34	50	82	14	9	5.5
CVV - 6225 - Ratio	120	165	32	18	11	M20	34	55	82	16	10	6
CVV - 6235 - Ratio	130	200	32	18	11	M24	41	60	105	18	11	7
CVV - 6245 - Ratio	140	200	36	20	12	M24	41	65	105	18	11	7
CVV - 6255 - Ratio	160	240	40	22	13	M30	49	80	130	22	14	9
CVV - 6265 - Ratio	170	300	40	22	13	M30	49	80	130	22	14	9
CVV - 6275 - Ratio	180	320	45	25	15	M30	52	90	150	25	14	9

Note: 1. □ indicates 0 or 5, expressing combination with reduction ratio. Refer to the Selection Table for details.
2. Dimension of shaft end diameter: Dimension tolerance conforms to JIS B 0401-1976 "h6."
3. Dimension of shaft end key: Dimension tolerance conforms to JIS B 1301-1996 "Parallel Key."

Dimension Tables Speed Reducer (Vertical, Slow Speed Shaft Down, V-Flange Mount)

CNV - 606□DA to 612□DB

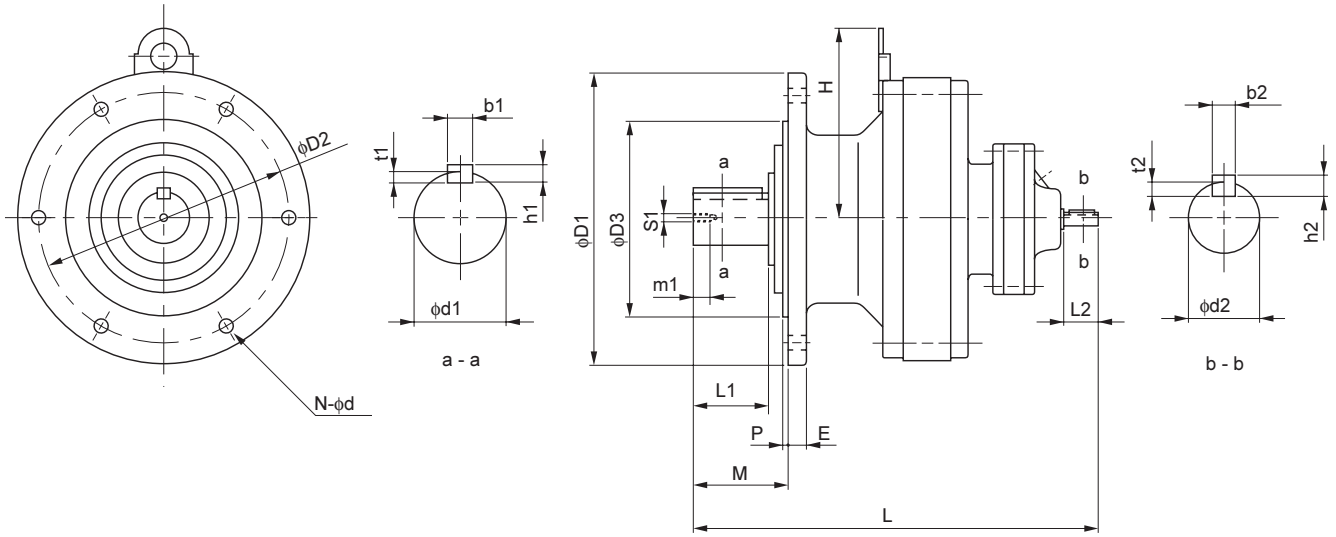

Frame Size Note: 1	L	D1	D2	D3 Note: 4	H	M	E	P	N	d	W [kg]
606□DA	178	120	102	80	-	34	8	3	6	9	5.0
607□DA	184	160	134	110	-	42	9	3	4	11	6.7
609□DA	243	160	134	110	107	48	9	3	4	11	11
610□DA	257	160	134	110	107	48	9	3	4	11	13
612□DA	293	210	180	140	137	69	13	4	6	11	25
612□DB	312	210	180	140	137	69	13	4	6	11	29

Model Note: 1	Output Shaft Note: 2, 3							Input Shaft Note: 2, 3				
	d1	L1	b1	h1	t1	S1	m1	d2	L2	b2	h2	t2
CNV - 606□DA - Ratio	14	25	5	5	3	M5	16	12	25	4	4	2.5
CNV - 607□DA - Ratio	18	30	6	6	3.5	M6	16	12	25	4	4	2.5
CNV - 609□DA - Ratio	28	35	8	7	4	M8	20	12	25	4	4	2.5
CNV - 610□DA - Ratio	28	35	8	7	4	M8	20	12	25	4	4	2.5
CNV - 612□DA - Ratio	38	55	10	8	5	M8	20	12	25	4	4	2.5
CNV - 612□DB - Ratio	38	55	10	8	5	M8	20	15	25	5	5	3

Note: 4. Pilot diameter (φD3): Dimension tolerance conforms to JIS B 0401-1976 "f8."
5. Dimensions in above drawings are subject to change without notice.

Dimension Tables Speed Reducer (Vertical, Slow Speed Shaft Down, V-Flange Mount)

CVV - 613□DA to 618□DA

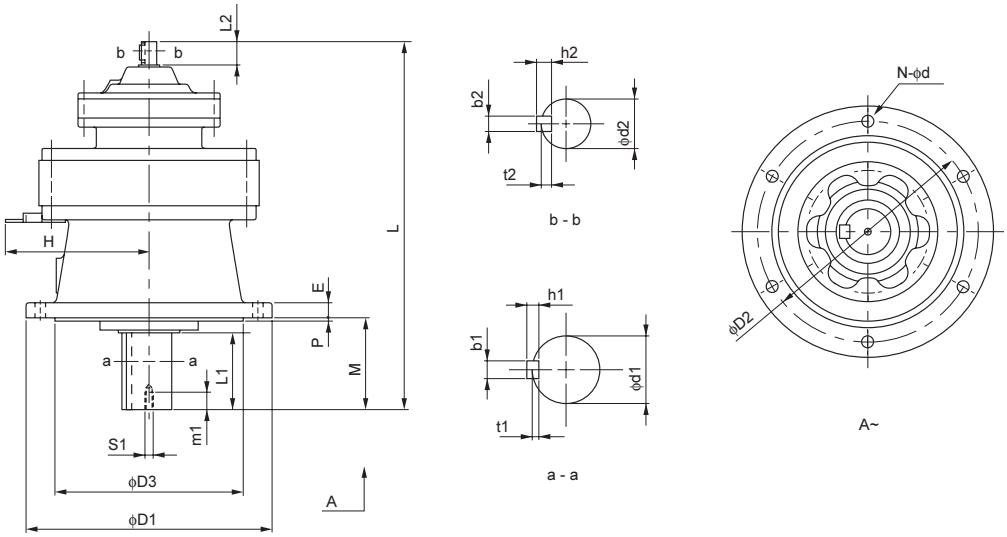

Frame Size Note: 1	L	D1	D2	D3 Note: 4	M	E	P	N	d	H	W [kg]
613□DA	347	260	230	200	76	15	4	6	11	150	40
613□DB	363	260	230	200	76	15	4	6	11	150	43
613□DC	369	260	230	200	76	15	4	6	11	-	44
614□DA	367	260	230	200	96	15	4	6	11	150	40
614□DB	383	260	230	200	96	15	4	6	11	150	43
614□DC	389	260	230	200	96	15	4	6	11	-	44
616□DA	433	340	310	270	89	20	4	6	11	-	80
616□DB	439	340	310	270	89	20	4	6	11	-	82
617□DA	478	400	360	316	94	22	5	8	14	-	115
617□DB	484	400	360	316	94	22	5	8	14	-	117
618□DA	526	430	390	345	110	22	5	8	18	-	149

Model Note: 1	Output Shaft Note: 2, 3							Input Shaft Note: 2, 3				
	d1	L1	b1	h1	t1	S1	m1	d2	L2	b2	h2	t2
CVV - 613□DA - Ratio	50	61	14	9	5.5	M10	18	12	25	4	4	2.5
CVV - 613□DB - Ratio	50	61	14	9	5.5	M10	18	15	25	5	5	3
CVV - 613□DC - Ratio	50	61	14	9	5.5	M10	18	15	25	5	5	3
CVV - 614□DA - Ratio	50	81	14	9	5.5	M10	18	12	25	4	4	2.5
CVV - 614□DB - Ratio	50	81	14	9	5.5	M10	18	15	25	5	5	3
CVV - 614□DC - Ratio	50	81	14	9	5.5	M10	18	15	25	5	5	3
CVV - 616□DA - Ratio	60	80	18	11	7	M10	18	15	25	5	5	3
CVV - 616□DB - Ratio	60	80	18	11	7	M10	18	15	25	5	5	3
CVV - 617□DA - Ratio	70	84	20	12	7.5	M12	24	15	25	5	5	3
CVV - 617□DB - Ratio	70	84	20	12	7.5	M12	24	15	25	5	5	3
CVV - 618□DA - Ratio	80	100	22	14	9	M12	24	15	25	5	5	3

Note: 1. □ indicates 0 or 5, expressing combination with reduction ratio. Refer to the Selection Table for details.
2. Dimension of shaft end diameter: Dimension tolerance conforms to JIS B 0401-1976 "h6."
3. Dimension of shaft end key: Dimension tolerance conforms to JIS B 1301-1996 "Parallel Key."

Dimension Tables Speed Reducer (Vertical, Slow Speed Shaft Down, V-Flange Mount)

CVV - 616□DC to 6275DA

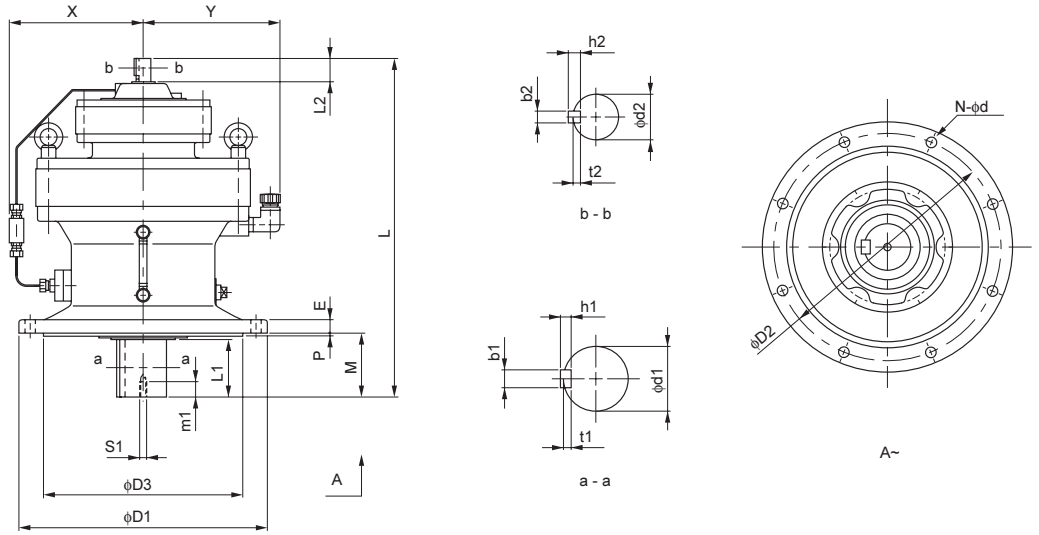

Frame Size Note: 1	L	D1	D2	D3 Note: 4	M	E	P	N	d	X	Y	W [kg]
616□DC	462	340	310	270	89	20	4	6	11	196	200	90
617□DC	509	400	360	316	94	22	5	8	14	218	225	125
618□DB	577	430	390	345	110	22	5	8	18	233	240	171
619□DA	629	490	450	400	145	30	6	12	18	255	270	229
619□DB	653	490	450	400	145	30	6	12	18	255	270	240
6205DA	670	455	405	355	204	30	5	8	22	341	287	246
6205DB	705	455	405	355	204	30	5	8	22	341	287	258
6215DA	731	490	440	390	203	35	7	8	24	348	306	333
6215DB	780	490	440	390	203	35	7	8	24	348	306	355
6225DA	773	535	475	415	210	35	10	8	27	352	326	408
6225DB	860	535	475	415	210	35	10	8	27	352	326	455
6235DA	883	570	510	450	250	40	10	8	27	359	344	510
6235DB	938	570	510	450	250	40	10	8	27	359	344	544
6245DA	921	635	560	485	250	40	10	8	33	370	371	604
6245DB	975	635	560	485	250	40	10	8	33	370	371	633
6255DA	1081	685	610	535	295	45	10	8	33	395	399	925
6255DB	1133	685	610	535	295	45	10	8	33	395	399	993
6265DA	1243	750	660	570	360	50	10	8	39	427	431	1265
6275DA	1504	1160	1020	900	355	60	10	8	39	610	613	2660

Model Note: 1	Output Shaft Note: 2, 3							Input Shaft Note: 2, 3				
	d1	L1	b1	h1	t1	S1	m1	d2	L2	b2	h2	t2
CVV - 616□DC - Ratio	60	80	18	11	7	M10	18	18	35	6	6	3.5
CVV - 617□DC - Ratio	70	84	20	12	7.5	M12	24	18	35	6	6	3.5
CVV - 618□DB - Ratio	80	100	22	14	9	M12	24	22	40	6	6	3.5
CVV - 619□DA - Ratio	95	125	25	14	9	M20	34	18	35	6	6	3.5
CVV - 619□DB - Ratio	95	125	25	14	9	M20	34	22	40	6	6	3.5
CVV - 6205DA - Ratio	100	165	28	16	10	M20	34	18	35	6	6	3.5
CVV - 6205DB - Ratio	100	165	28	16	10	M20	34	22	40	6	6	3.5
CVV - 6215DA - Ratio	110	165	28	16	10	M20	34	22	40	6	6	3.5
CVV - 6215DB - Ratio	110	165	28	16	10	M20	34	30	45	8	7	4
CVV - 6225DA - Ratio	120	165	32	18	11	M20	34	22	40	6	6	3.5
CVV - 6225DB - Ratio	120	165	32	18	11	M20	34	35	55	10	8	5
CVV - 6235DA - Ratio	130	200	32	18	11	M24	41	30	45	8	7	4
CVV - 6235DB - Ratio	130	200	32	18	11	M24	41	40	65	12	8	5
CVV - 6245DA - Ratio	140	200	36	20	12	M24	41	30	45	8	7	4
CVV - 6245DB - Ratio	140	200	36	20	12	M24	41	40	65	12	8	5
CVV - 6255DA - Ratio	160	240	40	22	13	M30	49	35	55	10	8	5
CVV - 6255DB - Ratio	160	240	40	22	13	M30	49	45	70	14	9	5.5
CVV - 6265DA - Ratio	170	300	40	22	13	M30	49	45	70	14	9	5.5
CVV - 6275DA - Ratio	180	320	45	25	15	M30	52	45	70	14	9	5.5

Note: 4. Pilot diameter (ϕD3): Dimension tolerance conforms to JIS B 0401-1976 "f8."
5. Dimensions in above drawings are subject to change without notice.

Dimension Tables Speed Reducer (Foot Mount, Center Height Option)

CNH - 610H, 612H

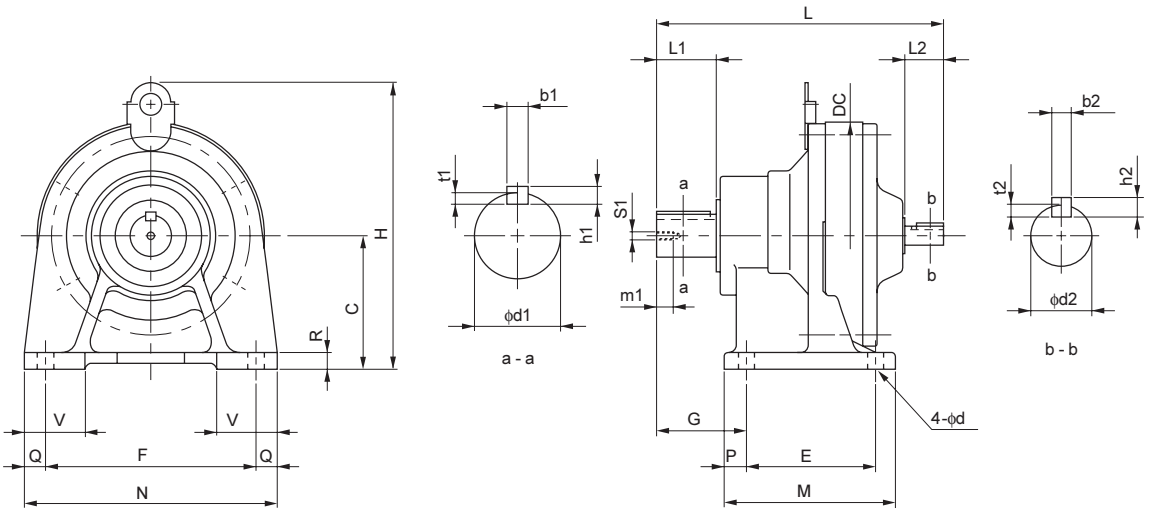

Frame Size	L	C	DC	E	F	G	H	M	N	P	Q	R	V	d	W [kg]
610H	208	120	150	90	150	60	227	135	180	15	15	12	45	11	14
612H	259	140	204	115	190	82	277	155	230	20	20	15	60	14	25

Model	Output Shaft (Note: 1, 2, 3)							Input Shaft (Note: 1, 2, 3)				
	d1	L1	b1	h1	t1	S1	m1	d2	L2	b2	h2	t2
CHH - 610H - Ratio	28	35	8	7	4	M8	20	15	25	5	5	3
CHH - 612H - Ratio	38	55	10	8	5	M8	20	18	35	6	6	3.5

CNH - 614H, 616H

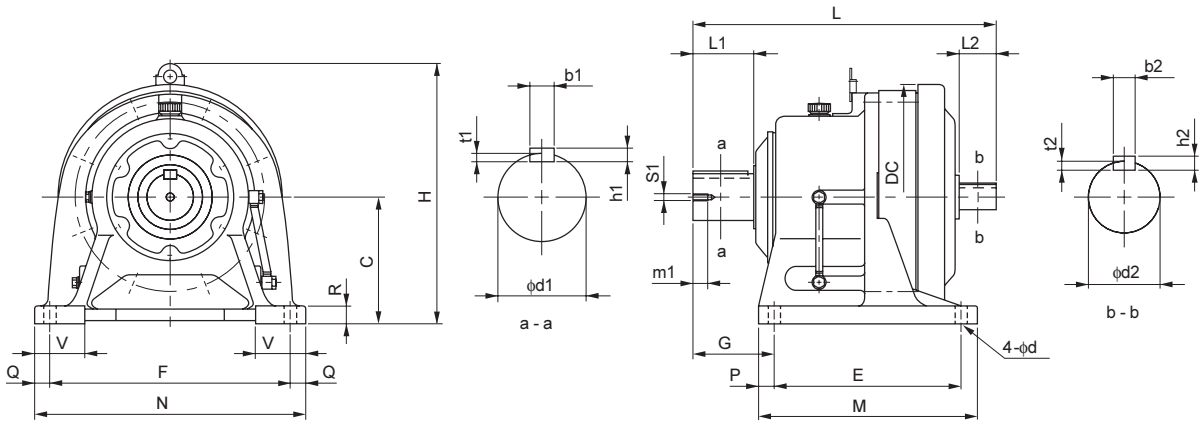

Frame size	L	C	DC	E	F	G	H	M	N	P	Q	R	V	d	W [kg]
614H	341	160	230	145	290	120	310	195	330	25	20	22	70	18	46
616H	413	200	318	150	370	139	407	238	410	44	20	25	80	18	89

Model	Output Shaft (Note: 1, 2, 3)							Input Shaft (Note: 1, 2, 3)				
	d1	L1	b1	h1	t1	S1	m1	d2	L2	b2	h2	t2
CHH - 614H - Ratio	50	90	14	9	5.5	M10	18	22	40	6	6	3.5
CHH - 616H - Ratio	60	90	18	11	7	M10	18	30	45	8	7	4

Note: 1. Dimension of shaft end diameter: Dimension tolerance conforms to JIS B 0401-1976 "h6."
2. Dimension of shaft end key: Dimension tolerance conforms to JIS B 1301-1996 "Parallel Key."
3. Refer to pages F-28~30 for details on input and output shaft end dimensions.
4. Dimensions in above drawings are subject to change without notice.

D

CYCLO® GEARMOTORS with AF Motor for Inverters

Page

1. How to Select
   - Standard Specifications D-3
   - Model Selection D-4
   - Reminders for Selection D-6
   - Nomenclature D-7
   - Precautions for Inverter Driving D-9
2. Selection Tables D-11
3. Dimension Tables D-23

D CYCLO® GEARMOTORS with AF Motor for Inverters

1. How to Select

Standard Specifications of Gearmotor for Inverters

Mortor

Items	Standard Specification Note: 1			Standard Specification with Built-in Brake		
Capacity Range	0.1 ~ 55kW × 4P			0.1 ~ 7.5kW × 4P FB Brake (Non-Asbestors) 11kW × 4P CMB Brake 15 ~22kW × 4P ESB Brake		
Enclosure	Totally enclosed fan cooled type (30kW and over: Totally enclosed air over)			Totally enclosed fan cooled type		
Power Source	380V 60Hz, 400V 60Hz, 415V 60Hz			380V 60Hz, 400V 60Hz, 415V 60Hz		
Insulation	F			F		
Time Rating	Continuous rating (6 ~ 60Hz Torque constant)			Continuous rating (6 ~ 60Hz Torque constant)		
Terminal Box Position & Lead Wire Direction	On the left side viewed from the load side. Regarding the draw out hole direction, refer to table below.			On the left side viewed fromm the load side. Regarding the draw out hole direction, refer to table below.		
Lead wiring (Lug type)		4P	6P		4P	6P
	6 Wires	0.1~5.5kW	-	8 Wires	0.1~5.5kW	-
	6 Wires	7.5~22kW Note: 2	-	8 Wires	7.5~22kW Note: 2	-
	6 for motor 2 for thermostat 3 for axial fan	30~55kW Note: 2	-	-	-	-
Standards	Conforms to IEC.					

Reducer

Items	Specifications		
Model	CYCLO 6000 Series		CYCLO 6000SK Series
Lubrication Method	Grease lubricated and oil lubricated models available		Grease lubricated models available
Speed Reduction Method	Internal planetary gear mechanism with trochoidal curved tooth profile		Involute gear type
Direction of output shaft rotation	Single reduction	Clockwise rotation	Counter-clockwise rotation
	Double reduction	Counter-clockwise rotation	*Note that it is different from CYCLO 6000 series single reduction type
	As observed from the load side when connected to R-U, S-V, T-W motors.		

Common to Motor and Reducer

Items		Specifications
Ambient Conditions	Installation location	Indoor or outdoor (Minimal dust and humidity)
	Ambient temperature	-10°C ~ 40°C
	Ambient humidity	Under 85%
	Elevation	Lower than 1,000 meters
	Atmosphere	Well ventilated location, free of corrosive gases, explosive gases, vapors, and dust.
Method of Mounting Note: 3		CHHM type-with slow speed shaft in horizontal direction and with legs. CVVM type-with slow speed shaft down in vertical direction and with mount. (No restrictions in mounting position of maintenance-free grease lubricatied models, and the 2nd digit of type symbol provides “N”)
Method of coupling with driven machine		Coupling, gears, chain sprocket or belt.
Painting		Type: Acrylic modified phtalic Colour: Equivalent to Muncell 6.5PB 3.6/8.2.

Note: 1. Refer to the technical section (Page F-31~57) for motor specification other than standard one.
2. ⅄-Δ start is also available. Please consult us.
3. Models for universal mounting (types with N for the second digit of nomenclature) can be manufactured for following frame sizes only. Other frame sizes require indication for mounting direction.

[Frame sizes for universal mounting direction] *□ of the frame size indicates 0, 5, or H.
606□, 607□, 608□, 609□, 610□, 611□, 612□,
606□DA, 607□DA, 608□DA, 609□DA, 610□DA, 612□DA, 612□DB

Direction of Withdrawing Lead Wire

Main frame mounting direction	Standard
Horizontal Type (Slow speed shaft in horizontal direction)	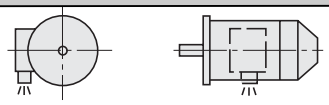
Vertical Type (Slow speed shaft in vertical direction)	

Note: Whenever not specified, the above direction shall be used. When the direction of withdrawal from the terminal box is other than specified above, refer to Page F-34.

Model Selection

Select models referring to the following flowchart. Consult us if there is any question.

Step 1: Determination of Operating Condition

Determine the following condition before starting selection.

- Application
- Motor capacity (kW) and output speed or reduction ratio
- Speed control range
- Radial load and axial load
- Mounting direction (slow speed shaft direction), mounting shape
- Motor specification (with or without brake etc.)
- Other ambient conditions (temperature, humidity, indoor or outdoor, and other environments)

* Refer to Reminders for Selection in page D-6 for selections using catalogs.

Step 2: Model Selection

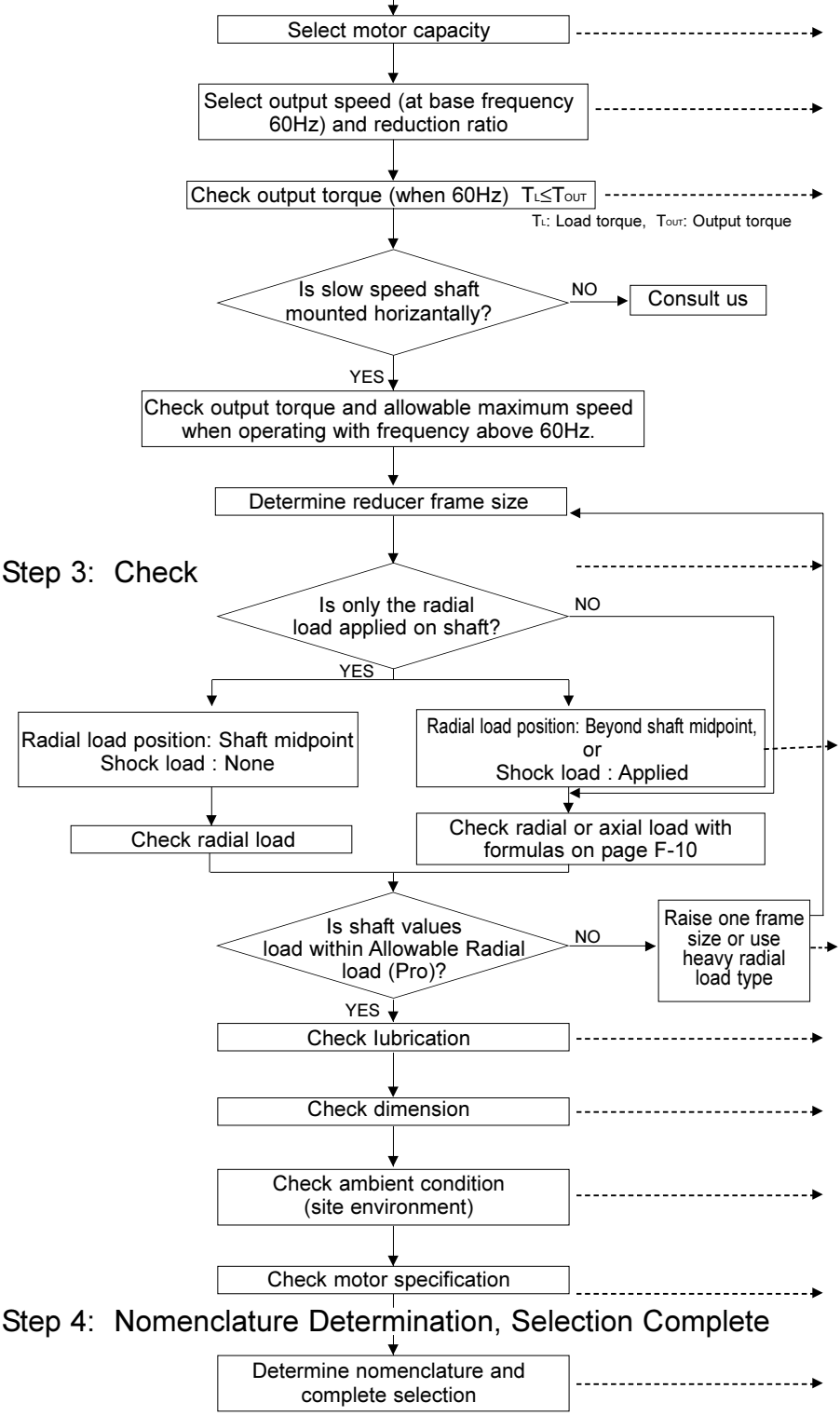

Procedure
- Open the page with selection table for your motor capacity, starting from page D-11.
- Select the cell containing close value to your output speed at 60 Hz or reduction ratio in the selection table.
- Check whether the output torque is sufficient for your usage at 60 Hz. Raise motor capacity by one frame size if the output torque is not sufficient.
- When slow speed shaft is not horizontal, contemplation is necessary on circulation system of lubrication oil. Consult us with the information of operation speed.
- Check whether only the radial load is applied on slow speed shaft. Refer to Technical Data starting at page F-10 and calculate if axial load is also applied.
- Refer to Technical Data starting at page F-10 depending on where the radial load is applied, or if any shock load is applied or not. *1 Allowable radial load for slow speed shaft in the selection table is when the load position is at the midpoint of the shaft. *2 Calculate radial load including initial tension if they are applied using chain, V-belt, synchronous belt, etc. - Check whether the calculated radial load does not exceed allowable radial load of the slow speed shaft.
- Check whether the selected combination is sufficient for your lubrication method.
- Check whether the dimension is adequate. Consult us if it does not match your operation condition.
- Check whether the selected combination is sufficient for your operation condition, such as surrounding environment. Refer to "Standard Specifications of Gearmotor" in page D-3 or section "F. Technical Data" for checking. - Check whether the selected motor is sufficient for your operation condition (power source, environment, thermal class, etc.).

Step 4: Nomenclature Determination, Selection Complete

Determine nomenclature and complete selection

- Determine nomenclature for selected model referring to "Nomenclature" in page D-7. Now, the selection process is complete.

Description of Our Selection Table

This is a brief desciption of our tables on page D-11 and after.

Motor capacity [kW]

Input speed [r/min] (Indicated for each number of poles at 60Hz.)

Selection Tables Gearmotors (AF Motor for Inverters)

5.5 kW

AF Motor for Inverter		
	P	4
Motor Speed n_1	r/min	1750(60Hz)

Output Speed n_2 r/min		Allowable MAX Speed (Horizontal)	Output Torque (60Hz) Tout		Allowable Radial Load (60Hz) Pro		Model						
6Hz	60Hz		[N·m]	[kgf·m]	[N]	[kgf]	Input Capacity Symbol	-	Frame Size	-	Suffix	-	Reduction Ratio
29.2	292	584 (120Hz)	171	17.4	5710	582	8	-	6130	-	AV	-	6
21.9	219	438 (120Hz)	228	23.3	6360	648	8	-	6130	-	AV	-	8
15.9	159	318 (120Hz)	314	32.0	7240	739	8	-	6130	-	AV	-	11
13.5	135	270 (120Hz)	371	37.8	7530	768	8	-	6130	-	AV	-	13
11.7	117	234 (120Hz)	428	43.6	7680	783	8	-	6130	-	AV	-	15
10.3	103	206 (120Hz)	485	49.4	8230	839	8	-	6135	-	AV	-	17
8.33	83.3	167 (120Hz)	599	61.0	8760	893	8	-	6135	-	AV	-	21
7.00	70.0	140 (120Hz)	713	72.7	9070	925	8	-	6135	-	AV	-	25
6.03	60.3	121 (120Hz)	827	84.3	14100	1430	8	-	6140	-	AV	-	29
5.00	50.0	100 (120Hz)	998	102	15000	1530	8	-	6145	-	AV	-	35
4.07	40.7	56.3 (83Hz)	1230	125	18900	1930	8	-	6160	-	AV	-	43
3.43	34.3	47.4 (83Hz)	1450	148	19600	2000	8	-	6165	-	AV	-	51
2.97	29.7	41.1 (83Hz)	1680	171	21700	2220	8	-	6165	-	AV	-	59
2.46	24.6	34.0 (83Hz)	2020	206	24700	2520	8	-	6175	-	AV	-	71
2.01	20.1	27.8 (83Hz)	2480	253	26400	2690	8	-	6175	-	AV	-	87
1.68	16.8	33.7 (120Hz)	2810	286	37700	3840	8	-	6180DB	-	AV	-	104
1.45	14.5	28.9 (120Hz)	3270	333	40000	4070	8	-	6185DB	-	AV	-	121

Output speed [r/min]

Allowable maxmum output speed [r/min] and motor frequency [Hz] at that time

Input capacity symbol - Frame size - Suffix (AV) - Reduction ratio

* Note that “reduction ratio = normal ratio” for models with “SK” at the end of frame size (6000 SK Series with “*1” on the side of reduction ratio).
(Indicated reduction ratio is the same as actual reduction ratios for other models.)

Reminders for Selection (CYCLO® GEARMOTORS with AF Motor for Inverters)

Note the following when selecting CYCLO® GEARMOTORS with AF motor for inverters.

(1) Selection Table on pages D-11~21 is based on the conditions below.

1. Operation of gearmotor with constant torque and load for 10 hours/day (Load factor 1.0).
2. Maximum speed of the motor for less than 1800 r/min (1200 r/min for 6P motors) for speed control range 1:10
3. Accelerated startup possible up to 1800 r/min (1200 r/min for 6P motors) for 6P motors (with our recommended lubrication within the ambient range of standard specification).
4. Also refer to "Precautions for Inverter Driving" on page D-9.

(2) Consult us when the operation condition is other than the above.

1. When the combination of motor and CYCLO® SPEED REDUCER differs with the Selection Table, such as when larger load factor is selected.
2. When using motor or inverter by other company.
3. When using standard motor by Sumitomo (any model other than AF motor for inverters).
4. When the input speed of the CYCLO® SPEED REDUCER exceeds 1800 r/min (1200 r/min for 6P motors). (Allowable maximum speed (for horizontal type) is indicated in the Selection Table for reference.)
5. When the ambient temperature exceeds the range for standard type or when the used lubricant is different from our recommendation (Refer to page F-6 in Technical Data section).

(3) Contact us with following information for inverter drive for inquiry or consultation.

1. Environment (ambient temperature and such)
2. Name of the application machine
3. Operation hours and cycle
4. Load characteristics and load percentage
5. Speed control range (Minimum Hz ~ Maximum Hz)
6. Manufacturer and model of the motor or inverter driver if using the product from other companies
7. Manufacturer and brand of the lubricant if our recommended lubricant cannot be used.

Nomenclature

Slow Speed Shaft Direction	
Horizontal, slow speed shaft level	H
Vertical, slow speed shaft down	V
Vertical, slow speed shaft up	W
Universal mounting	N

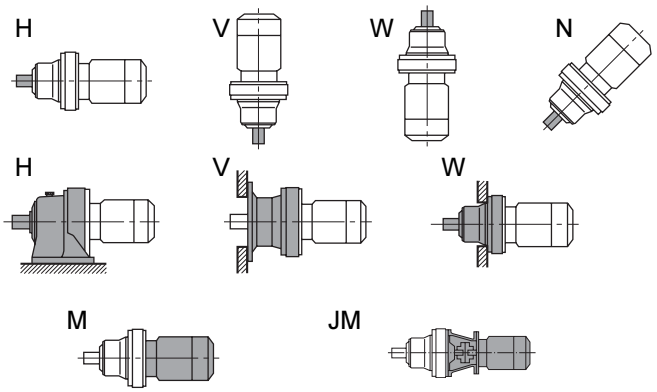

Mounting style	
Foot	H
Vflange	V
Flange	F

Type of Input	
Gearmotor	M
With adaptor	JM

Special Specifications	
Standard specification	-
Special specification	S

Motor Capacity Symbol

4P	Capacity symbol	01	02	05	1
	kW (HP)	0.1 (1/8)	0.2 (1/4)	0.4 (1/2)	0.75 (1)
	Capacity symbol	2	3	5	8
	kW (HP)	1.5 (2)	2.2 (3)	3.7 (5)	5.5 (7.5)
	Capacity symbol	10	15	20	25
	kW (HP)	7.5 (10)	11 (15)	15 (20)	18.5 (25)
	Capacity symbol	30	40	50	100
	kW (HP)	22 (30)	30 (40)	37 (50)	75 (100)
6P	Capacity symbol	406	506		
	kW (HP)	30 (40)	37 (50)		

Shaft specification	
Metric JIS (Standard)	-
Inch size	Y
AGMA I	YA
AGMA II	YB
AGMA III	YC
Metric DIN	G

Suffix	
With AF (inverter) motor	AV

Frame size (Refer to Selection Tables starting from page D-11.)

With or Without Brake	
Without brake	-
With brake	B

Nominal ratio

C	N	H	M		1	—	6105		—	AV	—		—	51

- Motor capacity symbol
- Special specification symbol
- Type of input
- Mounting style
- Slow speed shaft direction
- CYCLO DRIVE (C)
- Frame size
- Shaft specification
- Suffix
- With or Without brake
- Reduction ratio

Nomenclature and Product Examples

Nomenclature Examples (Gearmotor)

Example 1.

CNHM2 - 6105 - AV - 29

C:	Model	- CYCLO® DRIVE
N:	Slow speed shaft direction	- Universal direction
H:	Mounting style	- Foot
M:	Type of input	- Gearmotor type
2:	Motor capacity	- 1.5kW
6115:	Frame size	- 6105
AV:	With motor for inverter	- AV
29:	Reduction ratio	- 29

Example 2.

CHHM5 - 6175DC - AV - B - 143

C:	Model	- CYCLO® DRIVE
H:	Slow speed shaft direction	- Horizontal, level
H:	Mounting style	- Foot mount
M:	Type of input	- Gearmotor type
5:	Motor capacity	- 3.7kW
6175DC:	Frame size	- 6175DC
AV:	With motor for inverter	
B:	Brake	- With brake
143:	Reduction ratio	- 143

Application Products

Consult us for application products for CYCLO® GEARMOTORS with inverter motors. Application products are available, which are comparable to gearmotors with general motors.

Precautions for Inverter Driving

1. Constant Torque Operation

Constant torque operation needs a special motor for the inverter. Contact us especially when operation is in the frequency range less than 6 Hz.
The sensorless operation mode of our inverter HF-320α or HF-430 permits constant torque operation of general-purpose motors at 22 kW or less. (See page D-10 for details.)

2. Operation in Frequency Range Exceeding the Base Frequency (60 Hz)

Rated output operation will be carried out in the frequency range exceeding the base frequency. Therefore, the torque will decrease as the speed increases. Select an appropriate motor capacity according to the machine load characteristics. (See Fig. D-1)
The frequency exceeding 60 Hz is regarded as the base frequency. The output torque is lower than that at 60 Hz, which is the standard base frequency, also when V/f is set for constant torque operation.
When such adjustment is made, insufficient torque may result at low frequency or during start-up.
Do not change the base frequency figure for cases other than reduction load characteristics.

3. V/f Mode Operation of General-Purpose Inverter

In the case of multiple operation of motors or V/f operation with an inverter that has no sensorless function, it is necessary to adjust the boost value in compensation for the start-up torque and slow-speed torque. Standard values are usually set before shipment from manufacturer's factory but overcurrent may result depending on the load condition and acceleration/ deceleration. In such a case, change values appropriately as follows :

a. For small capacity motor and a small load, a large boost setting may cause overexcitation of a motor, leading to overcurrent. In that case, lower the boost to return to a normal value.
b. For large load when overcurrent during start-up and slow-speed operation easily causes tripping, increase the boost to lower the current value. If no improvement is observed after boost adjustment, it is necessary to examine the motor capacity.

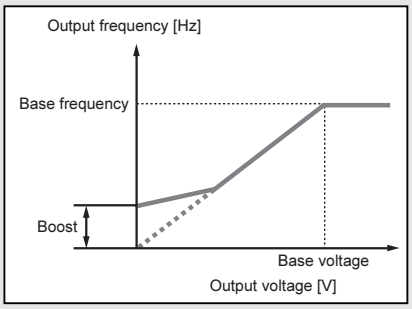

4. Operation by Sensorless Vector Inverter

Some high-performance inverters of a newest type are equipped with a sensorless vector operation function. This function is basically valid only when a motor and an inverter are operated in one-to-one correspondence. The function does not apply to multiple operation or pole-change operation. Products to which the auto-tuning method is applied do not need adjustment as in the case of V/f operation due to automatic control of the motor characteristics. Vector operation is carried out on the basis of the motor data read by the inverter, and operation is controlled instantaneously in accordance with the load condition to continue optimal operation.
When the wiring distance between the motor and inverter becomes long (20 m or more), compensation may be necessary according to the drop in the line impedance. Select sufficiently thick cables for long distance wiring. Consu It us for long distance wiring.

5. Output Torque Characteristics of Motor

○ Total output/torque characteristics curve when AF motor and SUMITOMO inverter are operated in combination

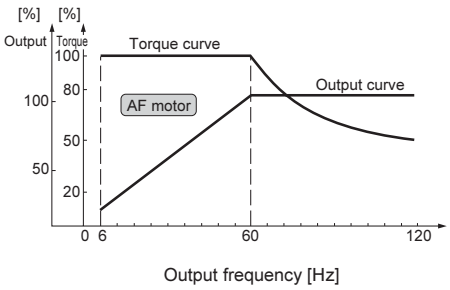

Note: Constant torque operation is possible from 1 Hz when an axial fan type is used.

○ Continuous operation characteristics when a general-purpose motor is driven by an inverter

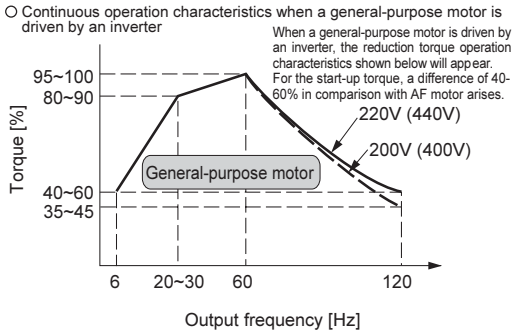

Fig. D-1

6. Motor Temperature Rise

When a general-purpose motor is combined with an inverter for variable-speed operation, the motor temperature rise may be slightly greater than if the motor is operated by a commercial power supply.
Possible causes are shown below:

Influence of output waveform: Unlike a commercial power supply, the output waveform of an inverter is not a complete sine wave but includes harmonics; therefore, motor damage will increase, raising the temperature slightly higher.

Decrease in motor cooling effect during slow-speed operation:
A motor is cooled by its own fan. Therefore, when the motor speed is decreased by an inverter, the quantity of cooling air decreases, reducing the cooling effect.

When operating the motor at frequencies lower than commercial power supply, reduce the load torque to decrease the temperature rise or use a special motor designed for inverter operation.

Constant Torque Operation of General-Purpose Motors

Operation with the following characteristics is possible when our inverters HF-320α and HF-430 series are used for sensorless control in combination with our general-purpose motors (22 kW or less).

A combination with a motor of standard frame size can be used for constant torque operation where an AF motor with a reducer of a larger frame size has conventionally been used.

Note:
1. To select the combination with CYCLO, examine the lubrication method and torque during slow speed operation and rated output operation. Specify that inverter operation is desired when placing an order (Refer to page C-6).
2. Contact us for 400V class model because insulation selection is necessary for inverter operation.
3. When a motor with brakes is to be operated for a long time at slow speed, the cooling effect of the fan will decrease and the brake temperature will rise substantially.
   Contact us for details.
4. Contact us for details when a general-purpose motor is to be operated under V/F control. (Contact us also when SF-320α series is to be used.)

kW	Motor frame size	Thermal class	Applicable frequency range	Constant torque range	Constant output range	Applicable inverter
0.1	F63S	E	6~120Hz	6~60Hz (1:10)	60~120Hz	HF-320α Sensorless control
0.2	F63M					
0.4	F71M					
0.75	F80M	B		20~60Hz (1:3)		
1.5	F90L					
2.2	F100L					
3.7	F112M					
5.5	F132S					HF-430 Sensorless control
7.5	F132M					
11	F160M					
15	G160L					
22	F180MG		6~110Hz		60~110Hz	

HF-320α and HF-430 Output Torque Characteristics During Sensorless Mode Operation

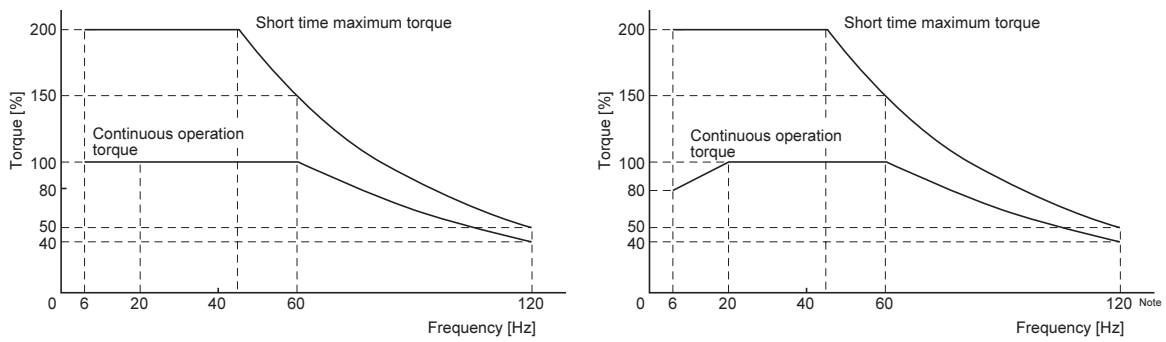

0.2~0.4kW

0.75~22kW

Note: Maximum output frequency is 110Hz for 22kW motor.

Output torque 100% is the motor rating at 60Hz.

Continuous operation torque: Allowable torque value enabling continuous operation with motor temperature rise, fulfilling standards.

Short-time operation torque: Maximum torque emitted by motor when driven with inverter. Motor can be operated for 1 minute at this torque value.

Use AF motor when constant torque is required for capacity 30kW and above.

D CYCLO® GEARMOTORS With AF Motor for Inverters

2. Selection Tables

Selection Tables Gearmotors (AF Motor for Inverters)

0.1 kW	AF Motor for Inverters	
	P	4
	Motor Speed n_1 r/min	1750 (60Hz)

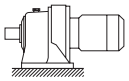

CNHM

Output Speed n_2 r/min 6Hz	60Hz	Allowable MAX Speed (Horizontal)	Output Torque (60Hz) Tout [N·m]	[kgf·m]	Allowable Radial Load (60Hz) Pro [N]	[kgf]	Model: Input Capacity Symbol	Frame Size	Suffix	Reduction Ratio	Page of Dim. CNHM
29.2	292	584 (120Hz)	3.11	0.317	756	77.1	01	6060	AV	6	D-29
21.9	219	438 (120Hz)	4.15	0.423	866	88.3	01	6060	AV	8	D-29
15.9	159	318 (120Hz)	5.70	0.581	1180	120	01	6060	AV	11	D-29
13.5	135	270 (120Hz)	6.74	0.687	1180	120	01	6060	AV	13	D-29
11.7	117	234 (120Hz)	7.78	0.793	1180	120	01	6060	AV	15	D-29
10.3	103	206 (120Hz)	8.81	0.898	1180	120	01	6060	AV	17	D-29
8.33	83.3	167 (120Hz)	10.9	1.11	1180	120	01	6060	AV	21	D-29
7.00	70.0	140 (120Hz)	13.0	1.32	1180	120	01	6060	AV	25	D-29
6.03	60.3	121 (120Hz)	15.0	1.53	1180	120	01	6060	AV	29	D-29
5.00	50.0	100 (120Hz)	18.1	1.85	1180	120	01	6060	AV	35	D-29
4.07	40.7	81.4 (120Hz)	22.3	2.27	1180	120	01	6065	AV	43	D-29
3.43	34.3	68.6 (120Hz)	26.4	2.70	1770	180	01	6070	AV	51	D-29
2.97	29.7	59.4 (120Hz)	30.6	3.12	1770	180	01	6070	AV	59	D-29
2.46	24.6	49.2 (120Hz)	36.8	3.75	2560	261	01	6080	AV	71	D-29
2.01	20.1	40.2 (120Hz)	45.1	4.60	2560	261	01	6085	AV	87	D-29
1.68	16.8	33.7 (120Hz)	51.1	5.21	1770	180	01	6075DA	AV	104	D-33
1.45	14.5	28.9 (120Hz)	59.4	6.06	3340	340	01	6090DA	AV	121	D-33
1.22	12.2	24.5 (120Hz)	70.2	7.16	3340	340	01	6090DA	AV	143	D-33
1.06	10.6	21.2 (120Hz)	81.0	8.26	3340	340	01	6090DA	AV	165	D-33
0.897	8.97	17.9 (120Hz)	95.8	9.76	3340	340	01	6090DA	AV	195	D-33
0.758	7.58	15.2 (120Hz)	113	11.6	3340	340	01	6090DA	AV	231	D-33
0.641	6.41	12.8 (120Hz)	134	13.7	3340	340	01	6095DA	AV	273	D-33
0.549	5.49	11.0 (120Hz)	157	16.0	3280	334	01	6095DA	AV	319	D-33
0.464	4.64	9.3 (120Hz)	185	18.9	3230	329	01	6095DA	AV	377	D-33
0.370	3.70	7.4 (120Hz)	232	23.7	5400	550	01	6105DA	AV	473	D-33
0.313	3.13	6.3 (120Hz)	275	28.0	5400	550	01	6105DA	AV	559	D-33
0.270	2.70	5.4 (120Hz)	319	32.5	9810	1000	01	6120DA	AV	649	D-33
0.239	2.39	4.8 (120Hz)	359	36.6	9810	1000	01	6120DA	AV	731	D-33
0.208	2.08	4.2 (120Hz)	413	42.1	9810	1000	01	6125DA	AV	841	D-33
0.174	1.74	3.5 (120Hz)	493	50.2	9810	1000	01	6125DA	AV	1003	D-33
0.140	1.40	2.8 (120Hz)	612	62.4	9810	1000	01	6125DA	AV	1247	D-33

Note: 1. Allowable radial load Pro is the value at the midpoint of the output shaft.
2. Lubrication method is different for each model. Refer to "Lubrication" section in page F-4~F-5 for details.
3. "6" at the end of "input capacity symbol" indicates models with 6P motor. Other models come with 4P motor.
4. Refer to page D-9 "Precautions for Inverter Driving" when operating beyond 6~60 Hz.

Selection Tables 600SK Series•Reducer

0.2 kW	AF Motor for Inverters	
	P	4
	Motor Speed n_1 r/min	1750 (60Hz)

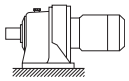

CHHM/CNHM

Output Speed n_2 r/min 6Hz	60Hz	Allowable MAX Speed (Horizontal)	Output Torque (60Hz) Tout [N·m]	[kgf·m]	Allowable Radial Load (60Hz) Pro [N]	[kgf]	Model: Input Capacity Symbol	Frame Size	Suffix	Reduction Ratio	Page of Dim. CNHM
29.2	292	584 (120Hz)	6.22	0.634	751	76.6	02	6060	AV	6	D-29
21.9	219	438 (120Hz)	8.29	0.846	859	87.5	02	6060	AV	8	D-29
15.9	159	318 (120Hz)	11.4	1.16	1170	119	02	6060	AV	11	D-29
13.5	135	270 (120Hz)	13.5	1.37	1180	120	02	6060	AV	13	D-29
11.7	117	234 (120Hz)	15.6	1.59	1180	120	02	6060	AV	15	D-29
10.3	103	206 (120Hz)	17.6	1.80	1180	120	02	6060	AV	17	D-29
8.33	83.3	167 (120Hz)	21.8	2.22	1180	120	02	6065	AV	21	D-29
7.00	70.0	140 (120Hz)	25.9	2.64	1770	180	02	6070	AV	25	D-29
6.03	60.3	121 (120Hz)	30.1	3.07	1770	180	02	6070	AV	29	D-29
5.00	50.0	100 (120Hz)	36.3	3.70	1770	180	02	6070	AV	35	D-29
4.07	40.7	81.4 (120Hz)	44.6	4.54	1770	180	02	6075	AV	43	D-29
3.43	34.3	68.6 (120Hz)	52.9	5.39	2560	261	02	6085	AV	51	D-29
2.97	29.7	59.4 (120Hz)	61.2	6.24	2560	261	02	6085	AV	59	D-29
2.46	24.6	49.2 (120Hz)	73.6	7.50	3290	335	02	6090	AV	71	D-29
2.01	20.1	40.2 (120Hz)	90.2	9.20	3340	340	02	6090	AV	87	D-29
1.68	16.8	33.7 (120Hz)	102	10.4	3340	340	02	6090DA	AV	104	D-33
1.47	14.7	29.4 (120Hz)	123	12.6	5400	550	02	6100	AV	119	D-29
1.45	14.5	28.9 (120Hz)	119	12.1	3340	340	02	6095DA	AV	121	D-33
1.22	12.2	24.5 (120Hz)	140	14.3	3340	340	02	6095DA	AV	143	D-33
1.06	10.6	21.2 (120Hz)	162	16.5	3340	340	02	6095DA	AV	165	D-33
0.897	8.97	17.9 (120Hz)	192	19.5	3340	340	02	6095DA	AV	195	D-33
0.758	7.58	15.2 (120Hz)	227	23.1	5400	550	02	6105DA	AV	231	D-33
0.641	6.41	12.8 (120Hz)	268	27.3	5400	550	02	6105DA	AV	273	D-33
0.549	5.49	11.0 (120Hz)	313	31.9	9810	1000	02	6120DA	AV	319	D-33
0.464	4.64	9.3 (120Hz)	370	37.7	9810	1000	02	6120DA	AV	377	D-33
0.370	3.70	7.4 (120Hz)	465	47.4	9810	1000	02	6125DA	AV	473	D-33
0.313	3.13	6.3 (120Hz)	549	56.0	9810	1000	02	6125DA	AV	559	D-33
0.270	2.70	5.4 (120Hz)	638	65.0	14700	1500	02	6130DA	AV	649	D-34
0.239	2.39	4.8 (120Hz)	718	73.2	14700	1500	02	6135DA	AV	731	D-34
0.208	2.08	4.2 (120Hz)	826	84.2	14700	1500	02	6135DA	AV	841	D-34
0.174	1.74	3.5 (120Hz)	985	100	14700	1500	02	6135DA	AV	1003	D-34
0.140	1.40	2.8 (120Hz)	1220	125	16000	1630	02	6145DA	AV	1247	D-34
0.085	0.85	1.7 (120Hz)	2030	207	22100	2250	02	6165DA	AV	2065	D-34
0.058	0.58	1.2 (120Hz)	2990	305	29500	3010	02	6175DA	AV	3045	D-34

5. "*1" indicate models with reduction ratios equal to nominal ratio. Refer to Table A-3 "6000 SK Series (Actual Reduction Ratio)" on page A-4 for actual reduction ratio. Indicated reduction ratio is the same as actual reduction ratio for other models.
6. "*2" indicate models requiring increased capacity for inverters, for certain operation conditions (ambient temperature, load condition, etc.).
7. Consult us for vertical types. Lubrication oil and system requires contemplation.

Selection Tables Gearmotors (AF Motor for Inverters)

0.4 kW	AF Motor for Inverters	
	P	4
	Motor Speed n_1 r/min	1750 (60Hz)

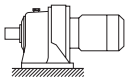

CHHM/CNHM

Output Speed n_2 r/min 6Hz	60Hz	Allowable MAX Speed (Horizontal)	Output Torque (60Hz) Tout [N·m]	[kgf·m]	Allowable Radial Load (60Hz) Pro [N]	[kgf]	Model: Input Capacity Symbol	Frame Size	Suffix	Reduction Ratio	Page of Dim. CNHM CHHM
70.0	700	1400 (120Hz)	5.18	0.528	1120	114	05	6070SK	AV	2.5 *1	D-28
58.3	583	1167 (120Hz)	6.22	0.634	1180	120	05	6070SK	AV	3 *1	D-28
43.8	438	875 (120Hz)	8.29	0.846	1290	131	05	6070SK	AV	4 *1	D-28
35.0	350	700 (120Hz)	10.4	1.06	1290	132	05	6070SK	AV	5 *1	D-28
29.2	292	584 (120Hz)	12.4	1.27	1290	132	05	6070SK	AV	6 *1	D-28
29.2	292	584 (120Hz)	12.4	1.27	1810	184	05	6080	AV	6	D-29
21.9	219	438 (120Hz)	16.6	1.69	1430	145	05	6070SK	AV	8 *1	D-28
21.9	219	438 (120Hz)	16.6	1.69	1960	200	05	6080	AV	8	D-29
17.5	175	350 (120Hz)	20.7	2.11	1590	162	05	6070SK	AV	10 *1	D-28
15.9	159	318 (120Hz)	22.8	2.33	2160	220	05	6080	AV	11	D-29
13.5	135	270 (120Hz)	27.0	2.75	2320	237	05	6080	AV	13	D-29
11.7	117	234 (120Hz)	31.1	3.17	2400	245	05	6080	AV	15	D-29
10.3	103	206 (120Hz)	35.3	3.59	2510	256	05	6080	AV	17	D-29
8.33	83.3	167 (120Hz)	43.5	4.44	2450	250	05	6085	AV	21	D-29
7.00	70.0	140 (120Hz)	51.8	5.28	2520	256	05	6085	AV	25	D-29
6.03	60.3	121 (120Hz)	60.1	6.13	2560	261	05	6085	AV	29	D-29
5.00	50.0	100 (120Hz)	72.6	7.40	3340	340	05	6090	AV	35	D-29
4.07	40.7	81.4 (120Hz)	89.2	9.09	3340	340	05	6090	AV	43	D-29
3.43	34.3	68.6 (120Hz)	106	10.8	3340	340	05	6095	AV	51	D-29
2.97	29.7	59.4 (120Hz)	122	12.5	5400	550	05	6100	AV	59	D-29
2.46	24.6	49.2 (120Hz)	147	15.0	5400	550	05	6105	AV	71	D-29
2.01	20.1	40.2 (120Hz)	180	18.4	5400	550	05	6105	AV	87	D-29
1.68	16.8	33.7 (120Hz)	204	20.8	9810	1000	05	6120DB	AV	104	D-33
1.45	14.5	28.9 (120Hz)	238	24.2	9810	1000	05	6120DB	AV	121	D-33
1.22	12.2	24.5 (120Hz)	281	28.6	9810	1000	05	6120DB	AV	143	D-33
1.06	10.6	21.2 (120Hz)	324	33.0	9810	1000	05	6120DB	AV	165	D-33
0.897	8.97	17.9 (120Hz)	383	39.1	9810	1000	05	6120DB	AV	195	D-33
0.758	7.58	15.2 (120Hz)	454	46.3	9810	1000	05	6125DB	AV	231	D-33
0.641	6.41	12.8 (120Hz)	536	54.7	9810	1000	05	6125DB	AV	273	D-33
0.549	5.49	11.0 (120Hz)	627	63.9	9810	1000	05	6125DB	AV	319	D-33
0.464	4.64	9.3 (120Hz)	741	75.5	14700	1500	05	6135DB	AV	377	D-34
0.370	3.70	7.4 (120Hz)	929	94.7	14700	1500	05	6135DB	AV	473	D-34
0.313	3.13	6.3 (120Hz)	1100	112	16000	1630	05	6145DB	AV	559	D-34
0.270	2.70	5.4 (120Hz)	1280	130	16000	1630	05	6145DB	AV	649	D-34
0.239	2.39	4.8 (120Hz)	1440	146	22100	2250	05	6165DA	AV	731	D-34
0.208	2.08	4.2 (120Hz)	1650	168	22100	2250	05	6165DA	AV	841	D-34
0.174	1.74	3.5 (120Hz)	1970	201	22100	2250	05	6165DA	AV	1003	D-34
0.140	1.40	2.8 (120Hz)	2450	250	29500	3010	05	6175DA	AV	1247	D-34
0.118	1.18	2.4 (120Hz)	2910	296	29500	3010	05	6175DA	AV	1479	D-34
0.069	0.69	1.4 (120Hz)	4980	508	41600	4240	05	6185DA	AV	2537	D-34

Note: 1. Allowable radial load Pro is the value at the midpoint of the output shaft.
2. Lubrication method is different for each model. Refer to "Lubrication" section in page F-4~F-5 for details.
3. "6" at the end of "input capacity symbol" indicates models with 6P motor. Other models come with 4P motor.
4. Refer to page D-9 "Precautions for Inverter Driving" when operating beyond 6~60 Hz.

Selection Tables Gearmotors (AF Motor for Inverters)

0.75 kW	AF Motor for Inverters	
	P	4
	Motor Speed n_1 r/min	1750 (60Hz)

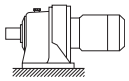

CHHM/CNHM

Output Speed n_2 r/min 6Hz	60Hz	Allowable MAX Speed (Horizontal)	Output Torque (60Hz) Tout [N·m]	[kgf·m]	Allowable Radial Load (60Hz) Pro [N]	[kgf]	Model: Input Capacity Symbol	Frame Size	Suffix	Reduction Ratio	Page of Dim. CNHM CHHM
70.0	700	1400 (120Hz)	9.72	0.991	1190	121	1	6080SK	AV	2.5 *1	D-28
58.3	583	1167 (120Hz)	11.7	1.19	1250	127	1	6080SK	AV	3 *1	D-28
43.8	438	875 (120Hz)	15.6	1.59	1350	138	1	6080SK	AV	4 *1	D-28
35.0	350	700 (120Hz)	19.4	1.98	1460	149	1	6080SK	AV	5 *1	D-28
29.2	292	584 (120Hz)	23.3	2.38	1520	155	1	6080SK	AV	6 *1	D-28
29.2	292	584 (120Hz)	23.3	2.38	2670	273	1	6090	AV	6	D-29
21.9	219	438 (120Hz)	31.1	3.17	1590	162	1	6080SK	AV	8 *1	D-28
21.9	219	438 (120Hz)	31.1	3.17	2980	304	1	6090	AV	8	D-29
17.5	175	350 (120Hz)	38.9	3.96	1680	171	1	6080SK	AV	10 *1	D-28
15.9	159	318 (120Hz)	42.8	4.36	3340	340	1	6090	AV	11	D-29
13.5	135	270 (120Hz)	50.5	5.15	3340	340	1	6090	AV	13	D-29
11.7	117	234 (120Hz)	58.3	5.95	3340	340	1	6090	AV	15	D-29
10.3	103	206 (120Hz)	66.1	6.74	3340	340	1	6090	AV	17	D-29
8.33	83.3	167 (120Hz)	81.7	8.32	3340	340	1	6090	AV	21	D-29
7.00	70.0	140 (120Hz)	97.2	9.91	3340	340	1	6095	AV	25	D-29
6.03	60.3	121 (120Hz)	113	11.5	3340	340	1	6095	AV	29	D-29
5.00	50.0	100 (120Hz)	136	13.9	3330	339	1	6095	AV	35	D-29
4.07	40.7	81.4 (120Hz)	167	17.0	5400	550	1	6100	AV	43	D-29
3.43	34.3	68.6 (120Hz)	198	20.2	5390	549	1	6105	AV	51	D-29
2.97	29.7	59.4 (120Hz)	229	23.4	7610	776	1	6110	AV	59	D-29
2.46	24.6	49.2 (120Hz)	276	28.1	7610	776	1	6115	AV	71	D-29
2.01	20.1	40.2 (120Hz)	338	34.5	7610	776	1	6115	AV	87	D-29
1.68	16.8	33.7 (120Hz)	383	39.1	9810	1000	1	6120DB	AV	104	D-33
1.45	14.5	28.9 (120Hz)	446	45.4	9810	1000	1	6125DB	AV	121	D-33
1.22	12.2	24.5 (120Hz)	527	53.7	9810	1000	1	6125DB	AV	143	D-33
1.06	10.6	21.2 (120Hz)	608	62.0	9810	1000	1	6125DB	AV	165	D-33
0.897	8.97	17.9 (120Hz)	718	73.2	14700	1500	1	6135DB	AV	195	D-34
0.758	7.58	15.2 (120Hz)	851	86.7	14700	1500	1	6135DB	AV	231	D-34
0.641	6.41	12.8 (120Hz)	1010	103	16000	1630	1	6145DB	AV	273	D-34
0.549	5.49	11.0 (120Hz)	1180	120	16000	1630	1	6145DB	AV	319	D-34
0.464	4.64	9.3 (120Hz)	1390	142	22100	2250	1	6165DA	AV	377	D-34
0.370	3.70	7.4 (120Hz)	1740	178	22100	2250	1	6165DA	AV	473	D-34
0.313	3.13	6.3 (120Hz)	2060	210	22100	2250	1	6165DA	AV	559	D-34
0.270	2.70	5.4 (120Hz)	2390	244	29500	3010	1	6175DA	AV	649	D-34
0.239	2.39	4.8 (120Hz)	2690	274	29500	3010	1	6175DA	AV	731	D-34
0.208	2.08	4.2 (120Hz)	3100	316	29500	3010	1	6175DA	AV	841	D-34
0.174	1.74	3.5 (120Hz)	3690	377	41700	4250	1	6185DA	AV	1003	D-34
0.140	1.40	2.8 (120Hz)	4590	468	41700	4250	1	6185DA	AV	1247	D-34
0.118	1.18	2.4 (120Hz)	5450	555	59000	6010	1	6195DA	AV	1479	D-35
0.095	0.95	1.9 (120Hz)	6810	694	59000	6010	1	6195DA	AV	1849	D-35
0.085	0.85	1.7 (120Hz)	7610	775	58200	5940	1	6195DA	AV	2065	D-35
0.069	0.69	1.4 (120Hz)	9350	953	84100	8570	1	6205DA	AV	2537 *2	D-36

5. "*1" indicate models with reduction ratios equal to nominal ratio. Refer to Table A-3 "6000 SK Series (Actual Reduction Ratio)" on page A-4 for actual reduction ratio. Indicated reduction ratio is the same as actual reduction ratio for other models.
6. "*2" indicate models requiring increased capacity for inverters, for certain operation conditions (ambient temperature, load condition, etc.).
7. Consult us for vertical types. Lubrication oil and system requires contemplation.

Selection Tables Gearmotors (AF Motor for Inverters)

1.5 kW	AF Motor for Inverters	
	P	4
	Motor Speed n_1 r/min	1750 (60Hz)

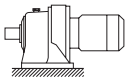

CHHM/CNHM

Output Speed n_2 r/min 6Hz	60Hz	Allowable MAX Speed (Horizontal)	Output Torque (60Hz) Tout [N·m]	[kgf·m]	Allowable Radial Load (60Hz) Pro [N]	[kgf]	Model: Input Capacity Symbol	Frame Size	Suffix	Reduction Ratio	Page of Dim. CNHM CHHM
70.0	700	1400 (120Hz)	19.4	1.98	2050	209	2	6090SK	AV	2.5 *1	D-28
58.3	583	1167 (120Hz)	23.3	2.38	2120	216	2	6090SK	AV	3 *1	D-28
43.8	438	875 (120Hz)	31.1	3.17	2370	242	2	6090SK	AV	4 *1	D-28
35.0	350	700 (120Hz)	38.9	3.96	2490	254	2	6090SK	AV	5 *1	D-28
29.2	292	584 (120Hz)	46.7	4.76	2530	258	2	6090SK	AV	6 *1	D-28
29.2	292	584 (120Hz)	46.7	4.76	3880	396	2	6100	AV	6	D-29
21.9	219	438 (120Hz)	62.2	6.34	2780	283	2	6090SK	AV	8 *1	D-28
21.9	219	438 (120Hz)	62.2	6.34	4330	441	2	6100	AV	8	D-29
17.5	175	350 (120Hz)	77.8	7.93	2900	296	2	6095SK	AV	10 *1	D-28
15.9	159	318 (120Hz)	85.5	8.72	4920	501	2	6100	AV	11	D-29
13.5	135	270 (120Hz)	101	10.3	5110	521	2	6100	AV	13	D-29
11.7	117	234 (120Hz)	117	11.9	5400	550	2	6100	AV	15	D-29
10.3	103	206 (120Hz)	132	13.5	5400	550	2	6100	AV	17	D-29
8.33	83.3	167 (120Hz)	163	16.6	5400	550	2	6105	AV	21	D-29
7.00	70.0	140 (120Hz)	194	19.8	5400	550	2	6105	AV	25	D-29
6.03	60.3	121 (120Hz)	226	23.0	5400	550	2	6105	AV	29	D-29
5.00	50.0	100 (120Hz)	272	27.7	7360	751	2	6115	AV	35	D-29
4.07	40.7	81.4 (120Hz)	334	34.1	7610	776	2	6115	AV	43	D-29
3.43	34.3	68.6 (120Hz)	397	40.4	9810	1000	2	6120	AV	51	D-29
2.97	29.7	59.4 (120Hz)	459	46.8	9810	1000	2	6125	AV	59	D-29
2.46	24.6	49.2 (120Hz)	552	56.3	12900	1320	2	6130	AV	71	D-30
2.01	20.1	40.2 (120Hz)	677	69.0	13900	1420	2	6135	AV	87	D-30
1.68	16.8	33.7 (120Hz)	766	78.1	14700	1500	2	6135DC	AV	104	D-34
1.45	14.5	28.9 (120Hz)	891	90.9	14700	1500	2	6135DC	AV	121	D-34
1.22	12.2	24.5 (120Hz)	1050	107	15900	1620	2	6145DC	AV	143	D-34
1.06	10.6	21.2 (120Hz)	1220	124	16000	1630	2	6145DC	AV	165	D-34
0.897	8.97	17.9 (120Hz)	1440	146	22100	2250	2	6165DB	AV	195	D-34
0.758	7.58	15.2 (120Hz)	1700	173	22100	2250	2	6165DB	AV	231	D-34
0.641	6.41	12.8 (120Hz)	2010	205	22100	2250	2	6165DB	AV	273	D-34
0.549	5.49	11.0 (120Hz)	2350	240	29500	3010	2	6175DB	AV	319	D-34
0.464	4.64	9.3 (120Hz)	2780	283	29500	3010	2	6175DB	AV	377	D-34
0.370	3.70	7.4 (120Hz)	3480	355	41700	4250	2	6185DA	AV	473	D-34
0.313	3.13	6.3 (120Hz)	4120	420	41700	4250	2	6185DA	AV	559	D-34
0.270	2.70	5.4 (120Hz)	4780	487	41700	4250	2	6185DA	AV	649	D-34
0.239	2.39	4.8 (120Hz)	5390	549	59000	6010	2	6195DA	AV	731	D-35
0.208	2.08	4.2 (120Hz)	6200	632	59000	6010	2	6195DA	AV	841	D-35
0.174	1.74	3.5 (120Hz)	7390	753	58300	5940	2	6195DA	AV	1003	D-35
0.118	1.18	2.4 (120Hz)	10900	1110	104000	10600	2	6215DA	AV	1479	D-36
0.095	0.95	1.9 (120Hz)	13600	1390	145000	14800	2	6225DA	AV	1849	D-36
0.085	0.85	1.7 (120Hz)	15200	1550	145000	14800	2	6225DA	AV	2065	D-36

Note: 1. Allowable radial load Pro is the value at the midpoint of the output shaft.
2. Lubrication method is different for each model. Refer to "Lubrication" section in page F-4~F-5 for details.
3. "6" at the end of "input capacity symbol" indicates models with 6P motor. Other models come with 4P motor.
4. Refer to page D-9 "Precautions for Inverter Driving" when operating beyond 6~60 Hz.

Selection Tables Gearmotors (AF Motor for Inverters)

2.2 kW	AF Motor for Inverters	
	P	4
	Motor Speed n_1 r/min	1750 (60Hz)

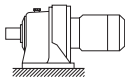

CHHM/CNHM

Output Speed n_2 r/min 6Hz	60Hz	Allowable MAX Speed (Horizontal)	Output Torque (60Hz) Tout [N·m]	[kgf·m]	Allowable Radial Load (60Hz) Pro [N]	[kgf]	Model: Input Capacity Symbol	Frame Size	Suffix	Reduction Ratio	Page of Dim. CNHM CHHM
70.0	700	1400 (120Hz)	28.5	2.91	1970	201	3	6100SK	AV	2.5 *1	D-28
58.3	583	1167 (120Hz)	34.2	3.49	2040	208	3	6100SK	AV	3 *1	D-28
43.8	438	875 (120Hz)	45.6	4.65	2240	228	3	6100SK	AV	4 *1	D-28
35.0	350	700 (120Hz)	57.0	5.81	2330	238	3	6100SK	AV	5 *1	D-28
29.2	292	584 (120Hz)	68.4	6.98	2370	242	3	6100SK	AV	6 *1	D-28
29.2	292	584 (120Hz)	68.4	6.98	4370	445	3	6110	AV	6	D-29
21.9	219	438 (120Hz)	91.2	9.30	2500	255	3	6105SK	AV	8 *1	D-28
21.9	219	438 (120Hz)	91.2	9.30	4870	496	3	6110	AV	8	D-29
17.5	175	350 (120Hz)	114	11.6	2500	263	3	6105SK	AV	10 *1	D-28
15.9	159	318 (120Hz)	125	12.8	5560	567	3	6110	AV	11	D-29
13.5	135	270 (120Hz)	148	15.1	5740	586	3	6110	AV	13	D-29
11.7	117	234 (120Hz)	171	17.4	6120	624	3	6110	AV	15	D-29
10.3	103	206 (120Hz)	194	19.8	6180	630	3	6110	AV	17	D-29
8.33	83.3	167 (120Hz)	240	24.4	6540	667	3	6115	AV	21	D-29
7.00	70.0	140 (120Hz)	285	29.1	6620	675	3	6115	AV	25	D-29
6.03	60.3	121 (120Hz)	331	33.7	6800	693	3	6115	AV	29	D-29
5.00	50.0	100 (120Hz)	399	40.7	8830	900	3	6120	AV	35	D-29
4.07	40.7	81.4 (120Hz)	490	50.0	9380	956	3	6125	AV	43	D-29
3.43	34.3	68.6 (120Hz)	582	59.3	11500	1180	3	6135	AV	51	D-30
2.97	29.7	59.4 (120Hz)	673	68.6	12100	1230	3	6135	AV	59	D-30
2.46	24.6	49.2 (120Hz)	810	82.5	16000	1630	3	6145	AV	71	D-30
2.01	20.1	40.2 (120Hz)	992	101	22100	2250	3	6160	AV	87	D-30
1.68	16.8	33.7 (120Hz)	1120	115	22100	2250	3	6160DC	AV	104	D-35
1.45	14.5	28.9 (120Hz)	1310	133	22100	2250	3	6160DC	AV	121	D-35
1.22	12.2	24.5 (120Hz)	1550	158	22100	2250	3	6165DC	AV	143	D-35
1.06	10.6	21.2 (120Hz)	1780	182	22100	2250	3	6165DC	AV	165	D-35
0.897	8.97	17.9 (120Hz)	2100	214	22100	2250	3	6165DC	AV	195	D-35
0.758	7.58	15.2 (120Hz)	2500	254	29500	3010	3	6175DC	AV	231	D-35
0.641	6.41	12.8 (120Hz)	2950	301	29500	3010	3	6175DC	AV	273	D-35
0.549	5.49	11.0 (120Hz)	3450	351	41700	4250	3	6185DB	AV	319	D-35
0.464	4.64	9.3 (120Hz)	4070	415	41700	4250	3	6185DB	AV	377	D-35
0.370	3.70	7.4 (120Hz)	5110	521	59000	6010	3	6195DA	AV	473	D-35
0.313	3.13	6.3 (120Hz)	6040	616	59000	6010	3	6195DA	AV	559	D-35
0.270	2.70	5.4 (120Hz)	7010	715	58400	5950	3	6195DA	AV	649	D-35
0.239	2.39	4.8 (120Hz)	7900	805	59000	6010	3	6195DA	AV	731	D-35
0.208	2.08	4.2 (120Hz)	9090	926	84100	8570	3	6205DA	AV	841	D-36
0.174	1.74	3.5 (120Hz)	10800	1100	104000	10600	3	6215DA	AV	1003	D-36
0.140	1.40	2.8 (120Hz)	13500	1370	145000	14800	3	6225DA	AV	1247	D-36
0.118	1.18	2.4 (120Hz)	16000	1630	179000	18200	3	6235DA	AV	1479	D-37
0.095	0.95	1.9 (120Hz)	20000	2040	179000	18200	3	6235DA	AV	1849	D-37
0.085	0.85	1.7 (120Hz)	22300	2270	208000	21200	3	6245DA	AV	2065	D-37

5. "*1" indicate models with reduction ratios equal to nominal ratio. Refer to Table A-3 "6000 SK Series (Actual Reduction Ratio)" on page A-4 for actual reduction ratio. Indicated reduction ratio is the same as actual reduction ratio for other models.
6. "*2" indicate models requiring increased capacity for inverters, for certain operation conditions (ambient temperature, load condition, etc.).
7. Consult us for vertical types. Lubrication oil and system requires contemplation.

Selection Tables Gearmotors (AF Motor for Inverters)

3.7 kW	AF Motor for Inverters	
	P	4
	Motor Speed n_1 r/min	1750 (60Hz)

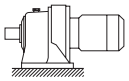

CHHM/CNHM

Output Speed n_2 r/min 6Hz	60Hz	Allowable MAX Speed (Horizontal)	Output Torque (60Hz) Tout [N·m]	[kgf·m]	Allowable Radial Load (60Hz) Pro [N]	[kgf]	Model: Input Capacity Symbol	Frame Size	Suffix	Reduction Ratio	Page of Dim. CNHM CHHM
70.0	700	1400 (120Hz)	48.0	4.89	2500	255	5	6110SK	AV	2.5 *1	D-28
58.3	583	1167 (120Hz)	57.5	5.87	2650	275	5	6110SK	AV	3 *1	D-28
43.8	438	875 (120Hz)	76.7	7.82	2820	287	5	6110SK	AV	4 *1	D-28
35.0	350	700 (120Hz)	95.9	9.78	2930	299	5	6110SK	AV	5 *1	D-28
29.2	292	584 (120Hz)	115	11.7	3060	312	5	6110SK	AV	6 *1	D-28
29.2	292	389 (80Hz)	115	11.7	4910	500	5	6120	AV	6	D-29
21.9	219	438 (120Hz)	153	15.6	3190	325	5	6110SK	AV	8 *1	D-28
21.9	219	438 (120Hz)	153	15.6	5470	557	5	6120	AV	8	D-29
17.5	175	350 (120Hz)	192	19.6	3330	339	5	6115SK	AV	10 *1	D-28
15.9	159	318 (120Hz)	211	21.5	6200	632	5	6120	AV	11	D-29
13.5	135	270 (120Hz)	249	25.4	6400	652	5	6120	AV	13	D-29
11.7	117	234 (120Hz)	288	29.3	6860	699	5	6120	AV	15	D-29
10.3	103	206 (120Hz)	326	33.2	6920	705	5	6125	AV	17	D-29
8.33	83.3	167 (120Hz)	403	41.1	7570	772	5	6125	AV	21	D-29
7.00	70.0	140 (120Hz)	480	48.9	7900	806	5	6125	AV	25	D-29
6.03	60.3	121 (120Hz)	556	56.7	9700	989	5	6130	AV	29	D-30
5.00	50.0	100 (120Hz)	671	68.4	10200	1040	5	6135	AV	35	D-30
4.07	40.7	81.4 (120Hz)	825	84.1	15800	1610	5	6145	AV	43	D-30
3.43	34.3	68.6 (120Hz)	978	99.7	16000	1630	5	6145	AV	51	D-30
2.97	29.7	59.4 (120Hz)	1130	115	22100	2250	5	6160	AV	59	D-30
2.46	24.6	34.0 (83Hz)	1360	139	21900	2240	5	6165	AV	71	D-30
2.01	20.1	27.8 (83Hz)	1670	170	21800	2220	5	6165	AV	87	D-30
1.68	16.8	33.7 (120Hz)	1890	193	22100	2250	5	6165DC	AV	104	D-35
1.45	14.5	28.9 (120Hz)	2200	224	29500	3010	5	6175DC	AV	121	D-35
1.22	12.2	24.5 (120Hz)	2600	265	29500	3010	5	6175DC	AV	143	D-35
1.06	10.6	21.2 (120Hz)	3000	306	29500	3010	5	6175DC	AV	165	D-35
0.897	8.97	17.9 (120Hz)	3540	361	41700	4250	5	6185DB	AV	195	D-35
0.758	7.58	15.2 (120Hz)	4200	428	41700	4250	5	6185DB	AV	231	D-35
0.641	6.41	12.8 (120Hz)	4960	506	41700	4250	5	6185DB	AV	273	D-35
0.549	5.49	11.0 (120Hz)	5800	591	59000	6010	5	6195DA	AV	319	D-35
0.464	4.64	9.3 (120Hz)	6850	698	59000	6010	5	6195DA	AV	377	D-35
0.370	3.70	7.4 (120Hz)	8600	876	104000	10600	5	6215DA	AV	473	D-36
0.313	3.13	6.3 (120Hz)	10200	1040	104000	10600	5	6215DA	AV	559	D-36
0.270	2.70	5.4 (120Hz)	11800	1200	104000	10600	5	6215DA	AV	649	D-36
0.239	2.39	4.8 (120Hz)	13300	1350	145000	14800	5	6225DA	AV	731	D-36
0.208	2.08	4.2 (120Hz)	15300	1560	179000	18200	5	6235DA	AV	841	D-37
0.174	1.74	3.5 (120Hz)	18200	1860	179000	18200	5	6235DA	AV	1003	D-37
0.140	1.40	2.8 (120Hz)	22700	2310	208000	21200	5	6245DA	AV	1247	D-37
0.118	1.18	1.6 (83Hz)	26900	2740	258000	26300	5	6255DA	AV	1479 *2	D-37
0.095	0.95	1.3 (83Hz)	33600	3430	258000	26300	5	6255DA	AV	1849 *2	D-37

Note: 1. Allowable radial load Pro is the value at the midpoint of the output shaft.
2. Lubrication method is different for each model. Refer to "Lubrication" section in page F-4~F-5 for details.
3. "6" at the end of "input capacity symbol" indicates models with 6P motor. Other models come with 4P motor.
4. Refer to page D-9 "Precautions for Inverter Driving" when operating beyond 6~60 Hz.

Selection Tables Gearmotors (AF Motor for Inverters)

5.5 kW	AF Motor for Inverters	
	P	4
	Motor Speed n_1 r/min	1750 (60Hz)

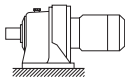

CHHM

Output Speed n_2 r/min 6Hz	60Hz	Allowable MAX Speed (Horizontal)	Output Torque (60Hz) Tout [N·m]	[kgf·m]	Allowable Radial Load (60Hz) Pro [N]	[kgf]	Model: Input Capacity Symbol	Frame Size	Suffix	Reduction Ratio	Page of Dim. CHHM
29.2	292	584 (120Hz)	171	17.4	5710	582	8 -	6130 -	AV -	6	D-30
21.9	219	438 (120Hz)	228	23.3	6360	648	8 -	6130 -	AV -	8	D-30
15.9	159	318 (120Hz)	314	32.0	7240	739	8 -	6130 -	AV -	11	D-30
13.5	135	270 (120Hz)	371	37.8	7530	768	8 -	6130 -	AV -	13	D-30
11.7	117	234 (120Hz)	428	43.6	7680	783	8 -	6130 -	AV -	15	D-30
10.3	103	206 (120Hz)	485	49.4	8230	839	8 -	6135 -	AV -	17	D-30
8.33	83.3	167 (120Hz)	599	61.0	8760	893	8 -	6135 -	AV -	21	D-30
7.00	70.0	140 (120Hz)	713	72.7	9070	925	8 -	6135 -	AV -	25	D-30
6.03	60.3	121 (120Hz)	827	84.3	14100	1430	8 -	6140 -	AV -	29	D-30
5.00	50.0	100 (120Hz)	998	102	15000	1530	8 -	6145 -	AV -	35	D-30
4.07	40.7	56.3 (83Hz)	1230	125	18900	1930	8 -	6160 -	AV -	43	D-30
3.43	34.3	47.4 (83Hz)	1450	148	19600	2000	8 -	6165 -	AV -	51	D-30
2.97	29.7	41.1 (83Hz)	1680	171	21700	2220	8 -	6165 -	AV -	59	D-30
2.46	24.6	34.0 (83Hz)	2020	206	24700	2520	8 -	6175 -	AV -	71	D-31
2.01	20.1	27.8 (83Hz)	2480	253	26400	2690	8 -	6175 -	AV -	87	D-31
1.68	16.8	33.7 (120Hz)	2810	286	37700	3840	8 -	6180DB -	AV -	104	D-35
1.45	14.5	28.9 (120Hz)	3270	333	40000	4070	8 -	6185DB -	AV -	121	D-35
1.22	12.2	24.5 (120Hz)	3860	394	41700	4250	8 -	6185DB -	AV -	143	D-35
1.06	10.6	21.2 (120Hz)	4460	454	41700	4250	8 -	6185DB -	AV -	165	D-35
0.897	8.97	17.9 (120Hz)	5270	537	58300	5940	8 -	6195DB -	AV -	195	D-35
0.758	7.58	15.2 (120Hz)	6240	636	59000	6010	8 -	6195DB -	AV -	231	D-35
0.641	6.41	12.8 (120Hz)	7370	752	59000	6010	8 -	6195DB -	AV -	273	D-35
0.549	5.49	11.0 (120Hz)	8620	878	84100	8570	8 -	6205DB -	AV -	319	D-36
0.464	4.64	9.3 (120Hz)	10200	1040	104000	10600	8 -	6215DA -	AV -	377	D-36
0.370	3.70	7.4 (120Hz)	12800	1300	145000	14800	8 -	6225DA -	AV -	473	D-36
0.313	3.13	6.3 (120Hz)	15100	1540	145000	14800	8 -	6225DA -	AV -	559	D-36
0.270	2.70	5.4 (120Hz)	17500	1790	179000	18200	8 -	6235DA -	AV -	649	D-37
0.239	2.39	4.8 (120Hz)	19700	2010	179000	18200	8 -	6235DA -	AV -	731	D-37
0.208	2.08	4.2 (120Hz)	22700	2320	208000	21200	8 -	6245DA -	AV -	841	D-37
0.174	1.74	2.4 (83Hz)	27100	2760	258000	26300	8 -	6255DA -	AV -	1003 *2	D-37
0.140	1.40	1.9 (83Hz)	33700	3430	258000	26300	8 -	6255DA -	AV -	1247	D-37
0.118	1.18	1.4 (73Hz)	40000	4070	276000	28100	8 -	6265DA -	AV -	1479 *2	D-37

5. "*1" indicate models with reduction ratios equal to nominal ratio. Refer to Table A-3 "6000 SK Series (Actual Reduction Ratio)" on page A-4 for actual reduction ratio. Indicated reduction ratio is the same as actual reduction ratio for other models.
6. "*2" indicate models requiring increased capacity for inverters, for certain operation conditions (ambient temperature, load condition, etc.).
7. Consult us for vertical types. Lubrication oil and system requires contemplation.

Selection Tables Gearmotors (AF Motor for Inverters)

7.5 kW	AF Motor for Inverters	
	P	4
	Motor Speed n_1 r/min	1750 (60Hz)

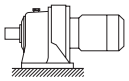

CHHM

Output Speed n_2 r/min 6Hz	60Hz	Allowable MAX Speed (Horizontal)	Output Torque (60Hz) Tout [N·m]	[kgf·m]	Allowable Radial Load (60Hz) Pro [N]	[kgf]	Model: Input Capacity Symbol	Frame Size	Suffix	Reduction Ratio	Page of Dim. CHHM
29.2	292	584 (120Hz)	233	23.8	5650	576	10	6130	AV	6	D-30
21.9	219	438 (120Hz)	311	31.7	6290	641	10	6130	AV	8	D-30
15.9	159	318 (120Hz)	428	43.6	7150	729	10	6130	AV	11	D-30
13.5	135	270 (120Hz)	505	51.5	7430	758	10	6130	AV	13	D-30
11.7	117	234 (120Hz)	583	59.5	7570	771	10	6135	AV	15	D-30
10.3	103	206 (120Hz)	661	67.4	8100	826	10	6135	AV	17	D-30
8.33	83.3	167 (120Hz)	817	83.2	13100	1330	10	6145	AV	21	D-30
7.00	70.0	140 (120Hz)	972	99.1	13700	1390	10	6145	AV	25	D-30
6.03	60.3	121 (120Hz)	1130	115	14000	1420	10	6145	AV	29	D-30
5.00	50.0	100 (120Hz)	1360	139	17500	1790	10	6165	AV	35	D-30
4.07	40.7	56.3 (83Hz)	1670	170	18600	1900	10	6165	AV	43	D-30
3.43	34.3	47.4 (83Hz)	1980	202	22100	2250	10	6170	AV	51	D-31
2.97	29.7	41.1 (83Hz)	2290	234	23100	2360	10	6175	AV	59	D-31
2.46	24.6	34.0 (83Hz)	2760	281	33100	3380	10	6180	AV	71	D-31
2.01	20.1	27.8 (83Hz)	3380	345	35600	3620	10	6185	AV	87	D-31
1.68	16.8	33.7 (120Hz)	3830	391	37300	3800	10	6185DB	AV	104	D-35
1.45	14.5	28.9 (120Hz)	4460	454	40000	4070	10	6185DB	AV	121	D-35
1.22	12.2	24.5 (120Hz)	5270	537	57900	5900	10	6195DB	AV	143	D-35
1.06	10.6	21.2 (120Hz)	6080	620	58300	5940	10	6195DB	AV	165	D-35
0.897	8.97	17.9 (120Hz)	7180	732	58300	5940	10	6195DB	AV	195	D-35
0.758	7.58	15.2 (120Hz)	8510	867	84100	8570	10	6205DB	AV	231	D-36
0.641	6.41	12.8 (120Hz)	10100	1030	104000	10600	10	6215DA	AV	273	D-36
0.549	5.49	11.0 (120Hz)	11800	1200	104000	10600	10	6215DA	AV	319	D-36
0.464	4.64	9.3 (120Hz)	13900	1420	145000	14800	10	6225DA	AV	377	D-36
0.370	3.70	7.4 (120Hz)	17400	1780	179000	18200	10	6235DA	AV	473	D-37
0.313	3.13	6.3 (120Hz)	20600	2100	179000	18200	10	6235DA	AV	559	D-37
0.270	2.70	5.4 (120Hz)	23900	2440	208000	21200	10	6245DA	AV	649	D-37
0.239	2.39	3.3 (83Hz)	26900	2740	258000	26300	10	6255DA	AV	731 *2	D-37
0.208	2.08	2.9 (83Hz)	31000	3160	258000	26300	10	6255DA	AV	841	D-37
0.174	1.74	2.1 (73Hz)	36900	3770	276000	28100	10	6265DA	AV	1003	D-37
0.140	1.40	1.7 (73Hz)	45900	4680	276000	28100	10	6265DA	AV	1247 *2	D-37
0.118	1.18	1.4 (73Hz)	54500	5550	248000	25300	10	6275DA	AV	1479	D-37
0.095	0.95	1.2 (73Hz)	68100	6940	248000	25300	10	6275DA	AV	1849	D-37

Note: 1. Allowable radial load Pro is the value at the midpoint of the output shaft.
2. Lubrication method is different for each model. Refer to "Lubrication" section in page F-4~F-5 for details.
3. "6" at the end of "input capacity symbol" indicates models with 6P motor. Other models come with 4P motor.
4. Refer to page D-9 "Precautions for Inverter Driving" when operating beyond 6~60 Hz.

Selection Tables Gearmotors (AF Motor for Inverters)

11 kW	AF Motor for Inverters	
	P	4
	Motor Speed n_1 r/min	1750 (60Hz)

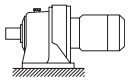

CHHM

Output Speed n_2 r/min 6Hz	60Hz	Allowable MAX Speed (Horizontal)	Output Torque (60Hz) Tout [N·m]	[kgf·m]	Allowable Radial Load (60Hz) Pro [N]	[kgf]	Model: Input Capacity Symbol	Frame Size	Suffix	Reduction Ratio	Page of Dim. CNHM
29.2	292	584 (120Hz)	342	34.9	5540	564	15 -	6135 -	AV -	6	D-30
21.9	219	438 (120Hz)	456	46.5	6150	627	15 -	6135 -	AV -	8	D-30
15.9	159	318 (120Hz)	627	63.9	6980	712	15 -	6135 -	AV -	11	D-30
13.5	135	270 (120Hz)	741	75.6	11100	1140	15 -	6140 -	AV -	13	D-30
11.7	117	234 (120Hz)	855	87.2	11600	1190	15 -	6140 -	AV -	15	D-30
10.3	103	206 (120Hz)	969	98.8	12100	1240	15 -	6145 -	AV -	17	D-30
8.33	83.3	115 (83Hz)	1200	122	15000	1530	15 -	6160 -	AV -	21	D-30
7.00	70.0	96.8 (83Hz)	1430	145	15700	1600	15 -	6165 -	AV -	25	D-30
6.03	60.3	83.4 (83Hz)	1650	169	16300	1660	15 -	6165 -	AV -	29	D-30
5.00	50.0	69.2 (83Hz)	2000	203	19700	2010	15 -	6170 -	AV -	35	D-31
4.07	40.7	56.3 (83Hz)	2450	250	20900	2130	15 -	6175 -	AV -	43	D-31
3.43	34.3	47.4 (83Hz)	2910	296	29600	3010	15 -	6180 -	AV -	51	D-31
2.97	29.7	41.1 (83Hz)	3360	343	30900	3150	15 -	6185 -	AV -	59	D-31
2.46	24.6	29.9 (73Hz)	4050	413	46300	4720	15 -	6190 -	AV -	71	D-31
2.01	20.1	24.5 (73Hz)	4960	506	49700	5070	15 -	6195 -	AV -	87	D-31
1.68	16.8	33.7 (120Hz)	5620	573	51800	5280	15 -	6195DB -	AV -	104	D-35
1.45	14.5	28.9 (120Hz)	6540	666	55500	5660	15 -	6195DB -	AV -	121	D-35
1.06	10.6	21.2 (120Hz)	8910	909	84100	8570	15 -	6205DB -	AV -	165	D-36
0.897	8.97	17.9 (120Hz)	10500	1070	104000	10600	15 -	6215DA -	AV -	195	D-36
0.758	7.58	15.2 (120Hz)	12500	1270	104000	10600	15 -	6215DA -	AV -	231	D-36
0.641	6.41	12.8 (120Hz)	14800	1510	137000	13900	15 -	6225DA -	AV -	273	D-36
0.549	5.49	11.0 (120Hz)	17200	1760	177000	18100	15 -	6235DA -	AV -	319	D-37
0.464	4.64	9.3 (120Hz)	20400	2080	208000	21200	15 -	6245DA -	AV -	377 *2	D-37
0.370	3.70	7.4 (120Hz)	25600	2600	208000	21200	15 -	6245DA -	AV -	473	D-37
0.313	3.13	3.8 (73Hz)	30200	3080	258000	26300	15 -	6255DA -	AV -	559 *2	D-37
0.270	2.70	3.3 (73Hz)	35100	3570	276000	28100	15 -	6265DA -	AV -	649 *2	D-37
0.239	2.39	2.9 (73Hz)	39500	4030	276000	28100	15 -	6265DA -	AV -	731 *2	D-37
0.208	2.08	2.5 (73Hz)	45400	4630	276000	28100	15 -	6265DA -	AV -	841 *2	D-37
0.174	1.74	2.1 (73Hz)	54200	5520	248000	25300	15 -	6275DA -	AV -	1003 *2	D-37
0.140	1.40	1.7 (73Hz)	67400	6870	248000	25300	15 -	6275DA -	AV -	1247 *2	D-37

5. "*1" indicate models with reduction ratios equal to nominal ratio. Refer to Table A-3 "6000 SK Series (Actual Reduction Ratio)" on page A-4 for actual reduction ratio. Indicated reduction ratio is the same as actual reduction ratio for other models.
6. "*2" indicate models requiring increased capacity for inverters, for certain operation conditions (ambient temperature, load condition, etc.).
7. Consult us for vertical types. Lubrication oil and system requires contemplation.

Selection Tables Gearmotors (AF Motor for Inverters)

15 kW	AF Motor for Inverters	
	P	4
	Motor Speed n_1 r/min	1750 (60Hz)

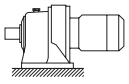

CHHM

Output Speed n_2r/min 6Hz	60Hz	Allowable MAX Speed (Horizontal)	Output Torque (60Hz) Tout [N·m]	[kgf·m]	Allowable Radial Load (60Hz) Pro [N]	[kgf]	Model: Input Capacity Symbol	Frame Size	Suffix	Reduction Ratio	Page of Dim. CNHM
29.2	292	355 (73Hz)	467	47.6	9670	986	20 -	6160 -	AV -	6	D-30
21.9	219	518 (120Hz)	622	63.4	10800	1100	20 -	6160 -	AV -	8	D-30
15.9	159	318 (120Hz)	855	87.2	12200	1240	20 -	6160 -	AV -	11	D-30
13.5	135	270 (120Hz)	1010	103	12700	1300	20 -	6165 -	AV -	13	D-30
11.7	117	142 (73Hz)	1170	119	13500	1370	20 -	6165 -	AV -	15	D-30
10.3	103	142 (83Hz)	1320	135	13900	1410	20 -	6165 -	AV -	17	D-30
8.33	83.3	115 (83Hz)	1630	166	14800	1510	20 -	6165 -	AV -	21	D-30
7.00	70.0	85.2 (73Hz)	1940	198	17500	1780	20 -	6170 -	AV -	25	D-31
6.03	60.3	73.4 (73Hz)	2260	230	18400	1870	20 -	6175 -	AV -	29	D-31
5.00	50.0	69.2 (83Hz)	2720	277	26500	2700	20 -	6180 -	AV -	35	D-31
4.07	40.7	56.3 (83Hz)	3340	341	28300	2880	20 -	6185 -	AV -	43	D-31
3.43	34.3	41.7 (73Hz)	3970	404	29200	2980	20 -	6185 -	AV -	51	D-31
2.97	29.7	36.1 (73Hz)	4590	468	43400	4430	20 -	6195 -	AV -	59	D-31
2.46	24.6	29.9 (73Hz)	5520	563	45900	4680	20 -	6195 -	AV -	71	D-31
2.01	20.1	24.5 (73Hz)	6770	690	84100	8570	20 -	6205 -	AV -	87 *2	D-32
1.45	14.5	28.9 (120Hz)	8910	909	101000	10300	20 -	6215DB -	AV -	121	D-36
1.06	10.6	21.2 (120Hz)	12200	1240	104000	10600	20 -	6215DB -	AV -	165	D-36
0.897	8.97	17.9 (120Hz)	14400	1460	122000	12400	20 -	6225DB -	AV -	195	D-36
0.758	7.58	15.2 (120Hz)	17000	1730	162000	16500	20 -	6235DA -	AV -	231	D-37
0.641	6.41	12.8 (120Hz)	20100	2050	188000	19200	20 -	6245DA -	AV -	273	D-37
0.549	5.49	10.1 (110Hz)	23500	2400	197000	20100	20 -	6245DA -	AV -	319	D-37
0.464	4.64	5.7 (73Hz)	27800	2830	255000	26000	20 -	6255DA -	AV -	377	D-37
0.370	3.70	4.5 (73Hz)	34800	3550	276000	28100	20 -	6265DA -	AV -	473 *2	D-37
0.313	3.13	3.8 (73Hz)	41200	4200	276000	28100	20 -	6265DA -	AV -	559 *2	D-37
0.270	2.70	3.3 (73Hz)	47800	4870	248000	25300	20 -	6275DA -	AV -	649 *2	D-37
0.239	2.39	2.9 (73Hz)	53900	5490	248000	25300	20 -	6275DA -	AV -	731 *2	D-37
0.208	2.08	2.5 (73Hz)	62000	6320	248000	25300	20 -	6275DA -	AV -	841	D-37

Note: 1. Allowable radial load Pro is the value at the midpoint of the output shaft.
2. Lubrication method is different for each model. Refer to "Lubrication" section in page F-4~F-5 for details.
3. "6" at the end of "input capacity symbol" indicates models with 6P motor. Other models come with 4P motor.
4. Refer to page D-9 "Precautions for Inverter Driving" when operating beyond 6~60 Hz.

Selection Tables 600SK Series•Reducer

18.5 kW	AF Motor for Inverters	
	P	4
	Motor Speed n_1 r/min	1750 (60Hz)

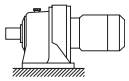

CHHM

Output Speed n_2 r/min 6Hz	60Hz	Allowable MAX Speed (Horizontal)	Output Torque (60Hz) Tout [N·m]	[kgf·m]	Allowable Radial Load (60Hz) Pro [N]	[kgf]	Model: Input Capacity Symbol	Frame Size	Suffix	Reduction Ratio	Page of Dim. CNHM
29.2	292	292 (60Hz)	575	58.7	10900	1110	25 -	6175 -	AV -	6	D-31
21.9	219	219 (60Hz)	767	78.2	12000	1220	25 -	6175 -	AV -	8	D-31
15.9	159	193 (73Hz)	1060	108	13800	1410	25 -	6175 -	AV -	11	D-31
13.5	135	164 (73Hz)	1250	127	14300	1460	25 -	6175 -	AV -	13	D-31
11.7	117	142 (73Hz)	1440	147	15000	1530	25 -	6175 -	AV -	15	D-31
10.3	103	125 (73Hz)	1630	166	15600	1590	25 -	6175 -	AV -	17	D-31
8.33	83.3	101 (73Hz)	2010	205	16800	1710	25 -	6175 -	AV -	21	D-31
7.00	70.0	85.1 (73Hz)	2400	244	17300	1760	25 -	6175 -	AV -	25	D-31
6.03	60.3	73.4 (73Hz)	2780	284	24700	2520	25 -	6180 -	AV -	29	D-31
5.00	50.0	60.8 (73Hz)	3360	342	26300	2680	25 -	6185 -	AV -	35	D-31
4.07	40.7	40.7 (60Hz)	4120	420	28000	2850	25 -	6185 -	AV -	43	D-31
3.43	34.3	41.7 (73Hz)	4890	499	41300	4210	25 -	6195 -	AV -	51	D-31
2.97	29.7	36.1 (73Hz)	5660	577	43100	4400	25 -	6195 -	AV -	59	D-31
2.01	20.1	20.1 (60Hz)	8340	851	90600	9240	25 -	6215 -	AV -	87 *2	D-32
1.45	14.5	17.6 (73Hz)	11000	1120	106000	10800	25 -	6225DB -	AV -	121	D-36
1.06	10.6	12.9 (73Hz)	15000	1530	143000	14500	25 -	6235DB -	AV -	165 *2	D-37
0.897	8.97	10.9 (73Hz)	17700	1810	150000	15300	25 -	6235DB -	AV -	195 *2	D-37
0.758	7.58	9.22 (73Hz)	21000	2140	179000	18200	25 -	6245DB -	AV -	231 *2	D-37
0.641	6.41	7.80 (73Hz)	24800	2530	188000	19200	25 -	6245DB -	AV -	273	D-37
0.549	5.49	6.7 (73Hz)	29000	2950	242000	24600	25 -	6255DA -	AV -	319	D-37
0.464	4.64	5.7 (73Hz)	34300	3490	276000	28100	25 -	6265DA -	AV -	377 *2	D-37
0.370	3.70	4.5 (73Hz)	43000	4380	276000	28100	25 -	6265DA -	AV -	473 *2	D-37
0.313	3.13	3.8 (73Hz)	50800	5180	248000	25300	25 -	6275DA -	AV -	559 *2	D-37
0.270	2.70	3.3 (73Hz)	59000	6010	248000	25300	25 -	6275DA -	AV -	649 *2	D-37
0.239	2.39	2.9 (73Hz)	66400	6770	248000	25300	25 -	6275DA -	AV -	731 *2	D-37

5. "*1" indicate models with reduction ratios equal to nominal ratio. Refer to Table A-3 "6000 SK Series (Actual Reduction Ratio)" on page A-4 for actual reduction ratio. Indicated reduction ratio is the same as actual reduction ratio for other models.
6. "*2" indicate models requiring increased capacity for inverters, for certain operation conditions (ambient temperature, load condition, etc.).
7. Consult us for vertical types. Lubrication oil and system requires contemplation.

Selection Tables Gearmotors (AF Motor for Inverters)

22 kW	AF Motor for Inverters	
	P	4
	Motor Speed n_1 r/min	1750 (60Hz)

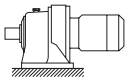

CHHM

Output Speed n_2 r/min			Output Torque (60Hz) Tout		Allowable Radial Load (60Hz) Pro		Model									Page of Dim.
6Hz	60Hz	Allowable MAX Speed (Horizontal)	[N·m]	[kgf·m]	[N]	[kgf]	Input Capacity Symbol	-	Frame Size	-	Suffix	-	Reduction Ratio			CNHM
29.2	292	292 (60Hz)	684	69.8	10800	1100	30	-	6175	-	AV	-	6			D-31
21.9	219	219 (60Hz)	912	93.0	11900	1220	30	-	6175	-	AV	-	8			D-31
15.9	159	193 (73Hz)	1250	128	13700	1390	30	-	6175	-	AV	-	11			D-31
13.5	135	164 (73Hz)	1480	151	14200	1450	30	-	6175	-	AV	-	13			D-31
11.7	117	142 (73Hz)	1710	174	14800	1510	30	-	6175	-	AV	-	15			D-31
10.3	103	125 (73Hz)	1940	198	15400	1570	30	-	6175	-	AV	-	17			D-31
8.33	83.3	101 (73Hz)	2400	244	16600	1690	30	-	6175	-	AV	-	21			D-31
7.00	70.0	85.2 (73Hz)	2850	291	23500	2400	30	-	6180	-	AV	-	25			D-31
6.03	60.3	73.4 (73Hz)	3310	337	24500	2500	30	-	6185	-	AV	-	29			D-31
5.00	50.0	60.8 (73Hz)	3990	407	26000	2650	30	-	6185	-	AV	-	35			D-31
4.07	40.7	40.7 (60Hz)	4900	500	39400	4020	30	-	6195	-	AV	-	43			D-31
2.97	29.7	29.7 (60Hz)	6730	686	79200	8070	30	-	6205	-	AV	-	59	*2		D-32
2.01	20.1	20.1 (60Hz)	9920	1010	95700	9760	30	-	6225	-	AV	-	87	*2		D-32
1.45	14.5	17.6 (73Hz)	13100	1330	106000	10800	30	-	6225DB	-	AV	-	121			D-36
1.06	10.6	12.9 (73Hz)	17800	1820	143000	14500	30	-	6235DB	-	AV	-	165	*2		D-37
0.897	8.97	10.9 (73Hz)	21100	2150	167000	17000	30	-	6245DB	-	AV	-	195	*2		D-37
0.758	7.58	9.22 (73Hz)	25000	2540	179000	18200	30	-	6245DB	-	AV	-	231	*2		D-37
0.641	6.41	7.80 (73Hz)	29500	3010	229000	23400	30	-	6255DA	-	AV	-	273			D-37
0.549	5.49	6.7 (73Hz)	34500	3510	276000	28100	30	-	6265DA	-	AV	-	319	*2		D-37
0.464	4.64	5.7 (73Hz)	40700	4150	276000	28100	30	-	6265DA	-	AV	-	377	*2		D-37
0.370	3.70	4.5 (73Hz)	51100	5210	248000	25300	30	-	6275DA	-	AV	-	473	*2		D-37
0.313	3.13	3.8 (73Hz)	60400	6160	248000	25300	30	-	6275DA	-	AV	-	559	*2		D-37

Note: 1. Allowable radial load Pro is the value at the midpoint of the output shaft.
2. Lubrication method is different for each model. Refer to "Lubrication" section in page F-4~F-5 for details.
3. "6" at the end of "input capacity symbol" indicates models with 6P motor. Other models come with 4P motor.
4. Refer to page D-9 "Precautions for Inverter Driving" when operating beyond 6~60 Hz.

Selection Tables Gearmotors (AF Motor for Inverters)

30 kW	AF Motor for Inverters		
	P	4	6
	Motor Speed n_1 r/min	1750 (60Hz)	1165 (60Hz)

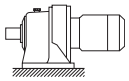

CHHM

Output Speed n_2 r/min 6Hz	60Hz	Allowable MAX Speed (Horizontal)	Output Torque (60Hz) Tout [N·m]	[kgf·m]	Allowable Radial Load (60Hz) Pro [N]	[kgf]	Model: Input Capacity Symbol	Frame Size	Suffix	Reduction Ratio	Page of Dim. CHHM
15.9	159	193 (73Hz)	1710	174	18200	1850	40	6185	AV	11	D-31
13.5	135	164 (73Hz)	2020	206	18800	1920	40	6185	AV	13	D-31
11.7	117	142 (73Hz)	2330	238	19800	2020	40	6185	AV	15	D-31
10.3	103	125 (73Hz)	2640	270	20800	2120	40	6185	AV	17	D-31
8.33	83.3	83.3 (60Hz)	3270	333	22400	2280	40	6185	AV	21	D-31
7.00	70.0	70.0 (60Hz)	3890	396	23100	2360	40	6185	AV	25	D-31
6.03	60.3	60.3 (60Hz)	4510	460	34500	3520	40	6195	AV	29	D-31
5.55	55.5	55.5 (60Hz)	4910	500	35800	3650	406	6190	AV	21	D-31
5.00	50.0	50.0 (60Hz)	5440	555	36300	3700	40	6195	AV	35	D-31
4.07	40.7	40.7 (60Hz)	6690	682	72600	7400	40	6205	AV	43 *2	D-32
2.97	29.7	29.7 (60Hz)	9180	935	80300	8180	40	6215	AV	59 *2	D-32
2.71	27.1	27.1 (60Hz)	10000	1020	83100	8480	406	6215	AV	43 *2	D-32
1.97	19.7	19.7 (60Hz)	13800	1410	119000	12200	406	6235	AV	59 *2	D-32
1.45	14.5	17.6 (73Hz)	17800	1820	133000	13500	40	6235DB	AV	121	D-37
1.06	10.6	12.9 (73Hz)	24300	2480	158000	16100	40	6245DB	AV	165	D-37
0.897	8.97	10.9 (73Hz)	28700	2930	204000	20800	40	6255DB	AV	195 *2	D-37
0.758	7.58	9.22 (73Hz)	34000	3470	265000	27000	40	6265DA	AV	231	D-37
0.641	6.41	7.80 (73Hz)	40200	4100	276000	28100	40	6265DA	AV	273	D-37
0.549	5.49	6.7 (73Hz)	47000	4790	248000	25300	40	6275DA	AV	319	D-37
0.464	4.64	5.7 (73Hz)	55500	5660	248000	25300	40	6275DA	AV	377 *2	D-37

5. "*1" indicate models with reduction ratios equal to nominal ratio. Refer to Table A-3 "6000 SK Series (Actual Reduction Ratio)" on page A-4 for actual reduction ratio. Indicated reduction ratio is the same as actual reduction ratio for other models.
6. "*2" indicate models requiring increased capacity for inverters, for certain operation conditions (ambient temperature, load condition, etc.).
7. Consult us for vertical types. Lubrication oil and system requires contemplation.

Selection Tables Gearmotors (AF Motor for Inverters)

37 kW	AF Motor for Inverters		
	P	4	6
	Motor Speed n_1 r/min	1750 (60Hz)	1165 (60Hz)

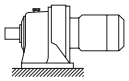

CHHM

Output Speed n_2 r/min			Output Torque (60Hz) Tout		Allowable Radial Load (60Hz) Pro		Model									Page of Dim.
6Hz	60Hz	Allowable MAX Speed (Horizontal)	[N·m]	[kgf·m]	[N]	[kgf]	Input Capacity Symbol	-	Frame Size	-	Suffix	-	Reduction Ratio			CHHM
15.9	159	193 (73Hz)	2110	215	25400	2590	50	-	6195	-	AV	-	11			D-31
13.5	135	164 (73Hz)	2490	254	26400	2690	50	-	6195	-	AV	-	13			D-31
11.7	117	142 (73Hz)	2880	293	27700	2820	50	-	6195	-	AV	-	15			D-31
10.3	103	125 (73Hz)	3260	332	29100	2970	50	-	6195	-	AV	-	17			D-31
8.33	83.3	83.3 (60Hz)	4030	411	31300	3190	50	-	6195	-	AV	-	21			D-31
7.77	77.7	77.7 (60Hz)	4320	441	31300	3190	506	-	6190	-	AV	-	15			D-31
7.00	70.0	70.0 (60Hz)	4800	489	32700	3330	50	-	6195	-	AV	-	25			D-31
6.03	60.3	60.3 (60Hz)	5560	567	34200	3490	50	-	6195	-	AV	-	29			D-31
5.55	55.5	55.5 (60Hz)	6050	617	35500	3610	506	-	6195	-	AV	-	21			D-31
4.07	40.7	40.7 (60Hz)	8250	841	73800	7520	50	-	6215	-	AV	-	43			D-32
2.97	29.7	29.7 (60Hz)	11300	1150	84700	8630	50	-	6225	-	AV	-	59			D-32
2.71	27.1	27.1 (60Hz)	12400	1260	87700	8940	506	-	6225	-	AV	-	43	*2		D-32
1.97	19.7	19.7 (60Hz)	17000	1730	133000	13500	506	-	6245	-	AV	-	59	*2		D-32
1.45	14.5	17.6 (73Hz)	22000	2240	180000	18400	50	-	6255DB	-	AV	-	121			D-37
1.06	10.6	12.9 (73Hz)	30000	3060	194000	19800	50	-	6255DB	-	AV	-	165			D-37
0.897	8.97	10.9 (73Hz)	35400	3610	248000	25300	50	-	6265DA	-	AV	-	195			D-37
0.758	7.58	9.22 (73Hz)	42000	4280	265000	27000	50	-	6265DA	-	AV	-	231			D-37
0.549	5.49	6.7 (73Hz)	58000	5910	248000	25300	50	-	6275DA	-	AV	-	319			D-37
0.464	4.64	5.7 (73Hz)	68500	6980	248000	25300	50	-	6275DA	-	AV	-	377	*2		D-37

Note:
1. Allowable radial load Pro is the value at the midpoint of the output shaft.
2. Lubrication method is different for each model. Refer to "Lubrication" section in page F-4~F-5 for details.
3. "6" at the end of "input capacity symbol" indicates models with 6P motor. Other models come with 4P motor.
4. Refer to page D-9 "Precautions for Inverter Driving" when operating beyond 6~60 Hz.
5. "*1" indicate models with reduction ratios equal to nominal ratio. Refer to Table A-3 "6000 SK Series (Actual Reduction Ratio)" on page A-4 for actual reduction ratio. Indicated reduction ratio is the same as actual reduction ratio for other models.
6. "*2" indicate models requiring increased capacity for inverters, for certain operation conditions (ambient temperature, load condition, etc.).
7. Consult us for vertical types. Lubrication oil and system requires contemplation.

D CYCLO® GEARMOTORS With AF Motor for Inverters

3. Dimension Tables

Dimension Tables (Horizontal Direction, Foot Mount)

CHHM□ Note: 1 - 607□SK to 611□SK - AV

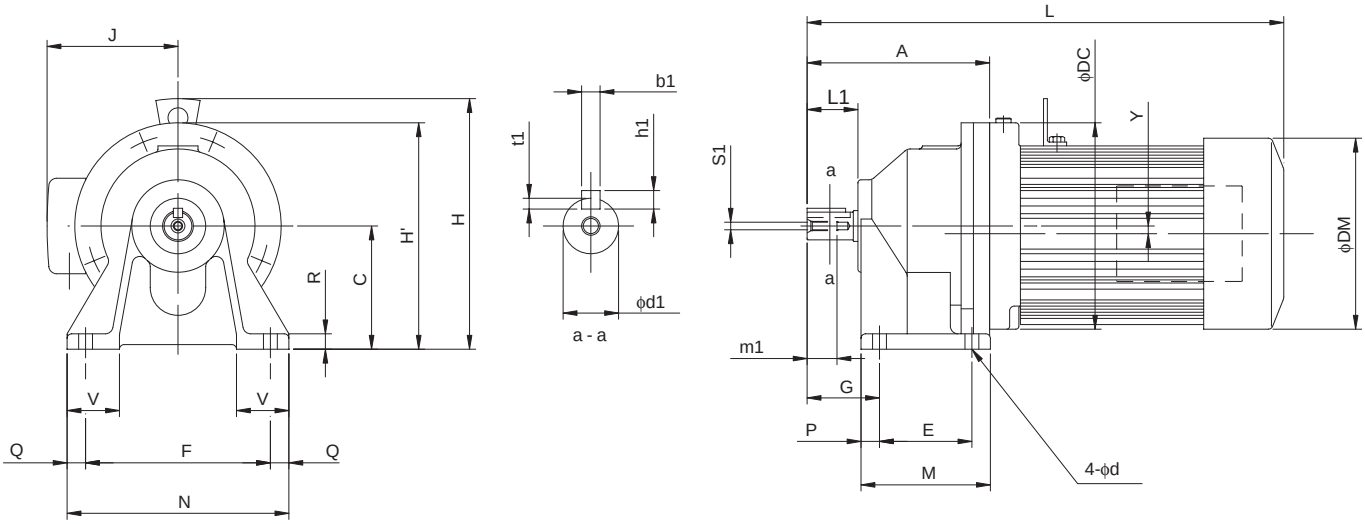

Frame size Note: 4	A	C	DC	E	F	G	M	N	P	Q	R	V	Y	d	Output Shaft Note: 2, 3, 6						
															d1	L1	b1	h1	t1	S1	m1
607□SK	119	80	134	60	120	47	84	144	12	12	10	34	0	9	18	30	6	6	3.5	M6	16
608□SK	140	90	150	75	120	52	99	144	12	12	13	37	0	9	22	35	6	6	3.5	M6	16
609□SK	166	100	150	90	150	60	135	180	15	15	12	40	0	11	28	35	8	7	4	M8	20
610□SK	170	100	162	90	150	60	135	180	15	15	12	40	0	11	28	35	8	7	4	M8	20
611□SK	182	120	204	90	150	70	135	180	15	15	12	45	3	11	32	45	10	8	5	M8	20

Model Note: 4, 5	Motor		Standard						With Brake					
	[kW]	[P]	L	H	H'	J	DM	W [kg]	L	H	H'	J	DM	W [kg]
CHHM05 - 607□SK - AV - (B) - Ratio	0.4	4	351	193	-	140	148	13	394	193	-	140	148	15
CHHM1 - 608□SK - AV - (B) - Ratio	0.75	4	410	210	-	145	160	19	472	210	-	145	160	23
CHHM2 - 609□SK - AV - (B) - Ratio	1.5	4	456	226	-	152	173	25	519	226	-	152	173	31
CHHM3 - 610□SK - AV - (B) - Ratio	2.2	4	491	246	-	168	212	38	563	246	-	168	212	49
CHHM5 - 611□SK - AV - (B) - Ratio	3.7	4	539	263	-	168	212	58	611	263	-	168	212	69

Note: 1. □ indicates motor capacity.
2. Dimension of shaft end diameter: Dimension tolerance conforms to JIS B 0401-1976 "h6."
3. Dimension of shaft end key: Dimension tolerance conforms to JIS B 1301-1996 "Parallel Key."

Dimension Tables (Universal Direction, Foot Mount)

CNHM[Note: 1]- 606□ to 612□ - AV

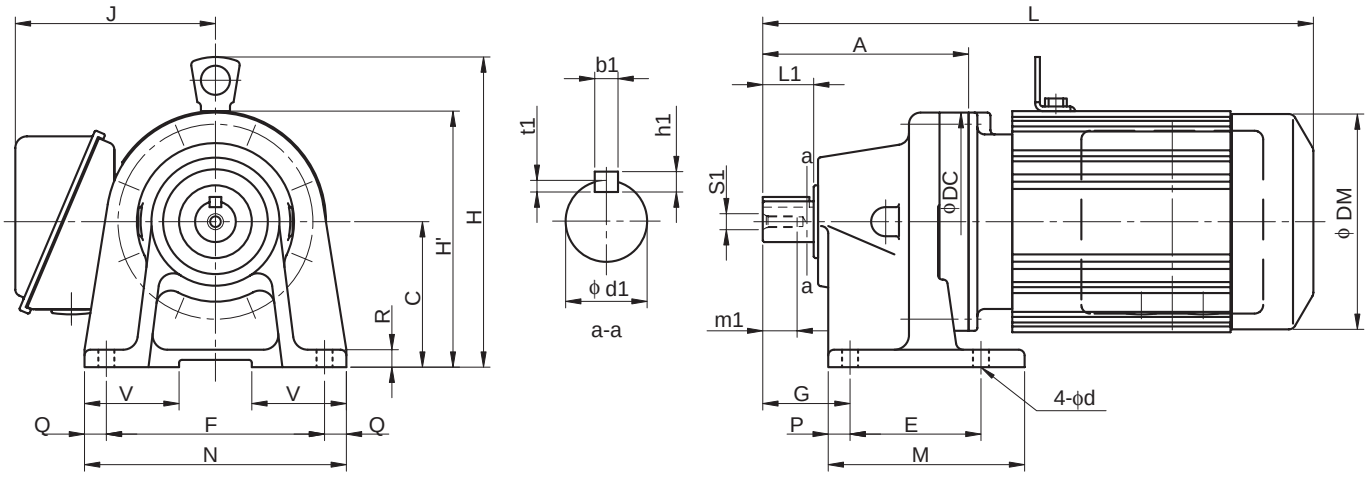

Frame size Note: 3	A	C	DC	E	F	G	M	N	O	P	R	V	d	Output Shaft Note: 2, 3, 6						
														d1	L1	b1	h1	t1	S1	m1
606□	92	80	110	60	120	41	84	144	12	12	10	35	9	14	25	5	5	3	M5	16
607□	98	80	110	60	120	47	84	144	12	12	10	35	9	18	30	6	6	3.5	M6	16
608□	129	90	134	75	120	52	99	144	12	12	13	37	9	22	35	6	6	3.5	M6	16
609□	142	100	150	90	150	60	135	180	15	15	12	40	11	28	35	8	7	4	M8	20
610□	156	100	150	90	150	60	135	180	15	15	12	40	11	28	35	8	7	4	M8	20
611□	170	120	162	90	150	70	135	180	15	15	12	45	11	32	45	10	8	5	M8	20
612□	186	120	204	115	190	82	155	230	20	20	15	55	14	38	55	10	8	5	M8	20

Model Note: 4, 5	Motor		Standard						With Brake					
	[kW]	[P]	L	H	H'	J	DM	W [kg]	L	H	H'	J	DM	W [kg]
CNHM01 - 606□ - AV - (B) - Ratio	0.1	4	272	-	138	130	124	8	300	-	138	130	124	9
CNHM02 - 606□ - AV - (B) - Ratio	0.2	4	288	-	138	130	124	9	320	-	138	130	124	10
CNHM01 - 607□ - AV - (B) - Ratio	0.1	4	278	-	138	130	124	8	306	-	138	130	124	9
CNHM02 - 607□ - AV - (B) - Ratio	0.2	4	294	-	138	130	124	9	326	-	138	130	124	10
CNHM01 - 608□ - AV - (B) - Ratio	0.1	4	304	-	157	130	124	11	332	-	157	130	124	12
CNHM02 - 608□ - AV - (B) - Ratio	0.2	4	320	-	157	130	124	13	352	-	157	130	124	14
CNHM05 - 608□ - AV - (B) - Ratio	0.4	4	361	203	-	140	148	17	404	203	-	140	148	18
CNHM02 - 609□ - AV - (B) - Ratio	0.2	4	338	-	175	130	124	14	370	-	175	130	124	16
CNHM05 - 609□ - AV - (B) - Ratio	0.4	4	379	213	-	140	148	18	422	213	-	140	148	21
CNHM1 - 609□ - AV - (B) - Ratio	0.75	4	412	220	-	145	160	21	474	220	-	145	160	26
CNHM02 - 610□ - AV - (B) - Ratio	0.2	4	352	207	-	130	124	19	384	207	-	130	124	21
CNHM05 - 610□ - AV - (B) - Ratio	0.4	4	393	213	-	140	148	23	436	213	-	140	148	26
CNHM1 - 610□ - AV - (B) - Ratio	0.75	4	426	220	-	145	160	27	488	220	-	145	160	32
CNHM2 - 610□ - AV - (B) - Ratio	1.5	4	446	226	-	152	173	31	509	226	-	152	173	37
CNHM1 - 611□ - AV - (B) - Ratio	0.75	4	436	240	-	145	160	26	493	240	-	145	160	31
CNHM2 - 611□ - AV - (B) - Ratio	1.5	4	456	246	-	152	173	30	519	246	-	152	173	36
CNHM3 - 611□ - AV - (B) - Ratio	2.2	4	491	266	-	168	212	40	563	266	-	168	212	50
CNHM2 - 612□ - AV - (B) - Ratio	1.5	4	476	246	-	152	173	40	539	246	-	152	173	47
CNHM3 - 612□ - AV - (B) - Ratio	2.2	4	499	266	-	168	212	50	571	266	-	168	212	60
CNHM5 - 612□ - AV - (B) - Ratio	3.7	4	543	266	-	168	212	57	615	266	-	168	212	67

Note: 4. □ indicates 0 or 5, expressing combination with reduction ratio. Refer to the Selection Table for details.
5. "B" after the suffix "AV" indicates models equipped with brake.
6. Dimensions of shaft end: Refer to pages F-28 to F-29 for details.
7. 30kW or over motors are air over type.
8. Dimensions in above drawings are subject to change without notice.

Dimension Tables (Horizontal Direction, Foot Mount)

CHHM□ Note: 1 - 613□ to 616□ - AV

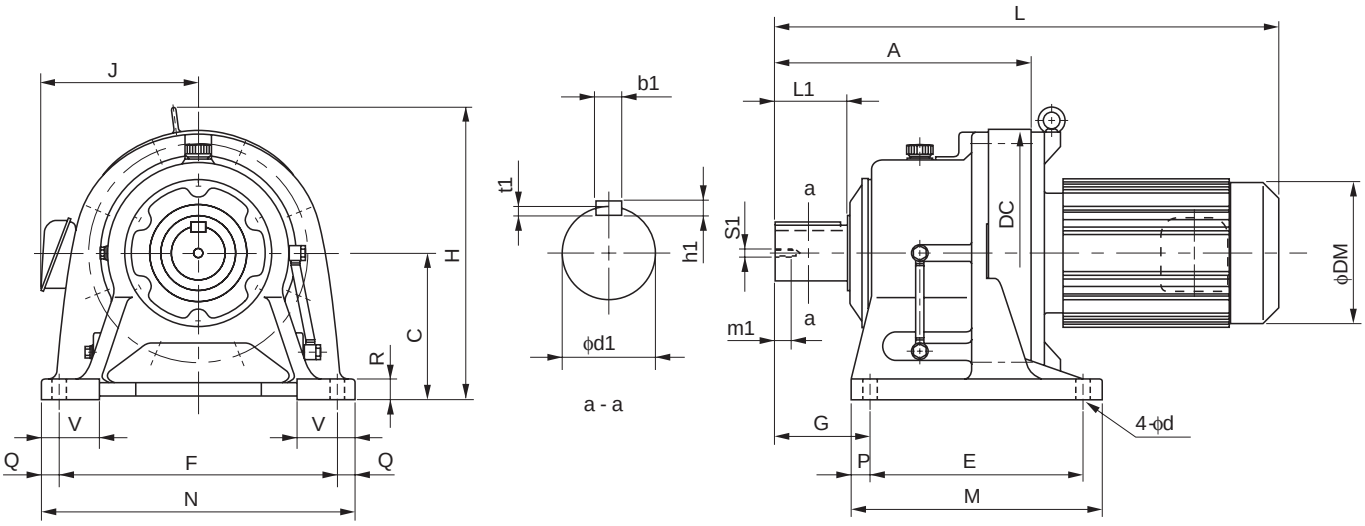

Frame size Note: 4	A	C	DC	E	F	G	M	N	P	Q	R	V	d	Output Shaft Note: 2, 3, 6						
														d1	L1	b1	h1	t1	S1	m1
613□	240	150	230	145	290	100	195	330	25	20	22	65	18	50	70	14	9	5.5	M10	18
Note: 8 614□	260	150	230	145	290	120	195	330	25	20	22	65	18	50	90	14	9	5.5	M10	18
Note: 8 616□	308	160	300	150	370	139	238	410	44	20	25	75	18	60	90	18	11	7	M10	18

Model Note: 4, 5	Motor		Standard					With Brake				
	[kW]	[P]	L	H	J	DM	W [kg]	L	H	J	DM	W [kg]
CHHM2 - 613□ - AV - (B) - Ratio	1.5	4	530	274	152	173	58	593	274	152	173	65
CHHM3 - 613□ - AV - (B) - Ratio	2.2	4	553	296	168	212	68	625	296	168	212	78
CHHM5 - 613□ - AV - (B) - Ratio	3.7	4	597	296	168	212	75	669	296	168	212	85
CHHM8 - 613□ - AV - (B) - Ratio	5.5	4	620	323	213	251	90	715	323	213	251	108
CHHM10 - 613□ - AV - (B) - Ratio	7.5	4	680	323	213	251	103	775	323	213	251	121
*CHHM15 - 613□ - AV - (B) - Ratio	11	4	770	358	261	324	155	875	321	261	324	189
CHHM3 - 614□ - AV - (B) - Ratio	2.2	4	573	296	168	212	69	645	296	168	212	79
CHHM5 - 614□ - AV - (B) - Ratio	3.7	4	617	296	168	212	76	689	296	168	212	86
CHHM8 - 614□ - AV - (B) - Ratio	5.5	4	640	323	213	251	91	735	323	213	251	109
CHHM10 - 614□ - AV - (B) - Ratio	7.5	4	700	323	213	251	104	795	323	213	251	122
*CHHM15 - 614□ - AV - (B) - Ratio	11	4	790	358	261	324	156	895	321	261	324	190
CHHM3 - 616□ - AV - (B) - Ratio	2.2	4	621	310	168	212	106	693	310	168	212	116
CHHM5 - 616□ - AV - (B) - Ratio	3.7	4	665	310	168	212	113	737	310	168	212	123
CHHM8 - 616□ - AV - (B) - Ratio	5.5	4	693	333	213	251	129	788	333	213	251	146
CHHM10 - 616□ - AV - (B) - Ratio	7.5	4	753	333	213	251	143	848	333	213	251	160
*CHHM15 - 616□ - AV - (B) - Ratio	11	4	838	368	261	324	196	943	368	261	324	230
*CHHM20 - 616□ - AV - (B) - Ratio	15	4	933	368	340	394	272	1098	368	340	394	323

"*" indicates models with bottom lavel of the motor lower than the reducer base.
Refer to pages D-33 and D-34 for center height options.

Note: 1. □ indicates motor capacity.
2. Dimension of shaft end diameter: Dimension tolerance conforms to JIS B 0401-1976 "h6."
3. Dimension of shaft end key: Dimension tolerance conforms to JIS B 1301-1996 "Parallel Key."

Dimension Tables (Horizontal Direction, Foot-Mount)

CHHM□ (Note: 1) - 617□ to 619□ - AV

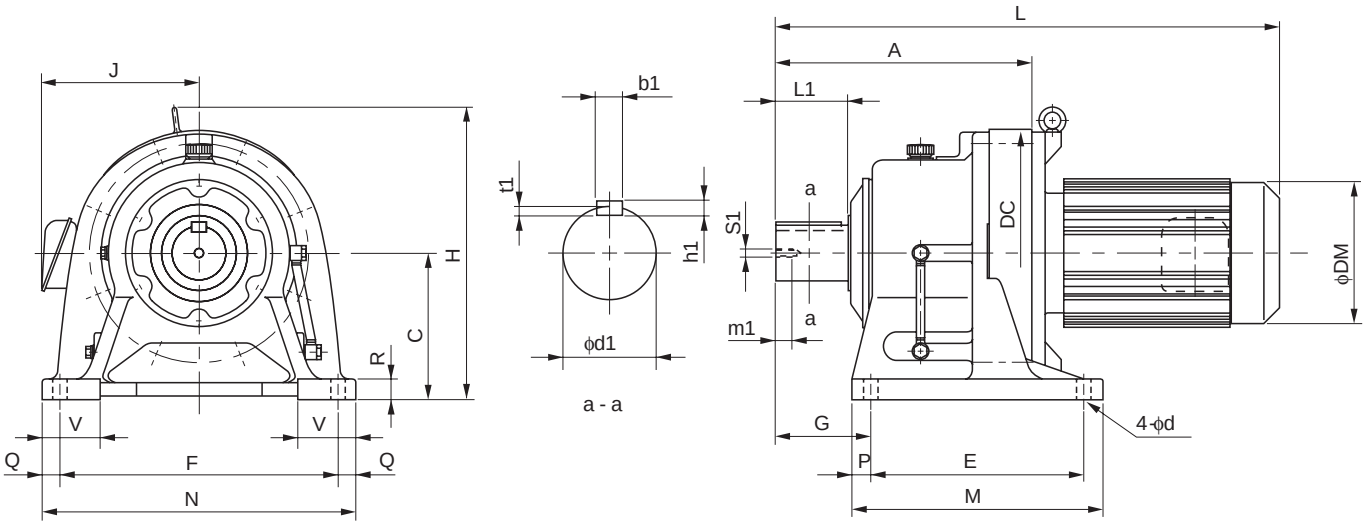

Frame size (Note: 4)	A	C	DC	E	F	G	M	N	P	Q	R	V	d	Output Shaft (Note: 2, 3, 6) d1	L1	b1	h1	t1	S1	m1
617□	352	200	340	275	380	125	335	430	30	25	30	80	22	70	90	20	12	7.5	M12	24
618□	389	220	370	320	420	145	380	470	30	25	30	85	22	80	110	22	14	9	M12	24
619□	465	250	430	380	480	170	440	530	30	25	35	90	26	95	135	25	14	9	M20	34

Model (Note: 4, 5)	Motor [kW]	Motor [P]	Standard L	Standard H	Standard J	Standard DM	Standard W [kg]	With Brake L	With Brake H	With Brake J	With Brake DM	With Brake W [kg]
CHHM8 - 617□ - AV - (B) - Ratio	5.5	4	742	403	213	251	169	837	403	213	251	187
CHHM10 - 617□ - AV - (B) - Ratio	7.5	4	802	403	213	251	183	897	403	213	251	201
CHHM15 - 617□ - AV - (B) - Ratio	11	4	882	413	261	324	237	987	413	261	324	271
CHHM20 - 617□ - AV - (B) - Ratio	15	4	977	428	340	394	309	1142	428	340	394	360
CHHM25 - 617□ - AV - (B) - Ratio	18.5	4	977	428	340	394	309	1142	428	340	394	360
CHHM30 - 617□ - AV - (B) - Ratio	22	4	977	428	340	394	326	1142	428	340	394	369
CHHM10 - 618□ - AV - (B) - Ratio	7.5	4	839	438	213	251	221	934	438	213	251	239
CHHM15 - 618□ - AV - (B) - Ratio	11	4	919	438	261	324	281	1024	438	261	324	310
CHHM20 - 618□ - AV - (B) - Ratio	15	4	1014	448	340	394	347	1179	448	340	394	398
CHHM25 - 618□ - AV - (B) - Ratio	18.5	4	1014	448	340	394	347	1179	448	340	394	398
CHHM30 - 618□ - AV - (B) - Ratio	22	4	1014	448	340	394	364	1179	448	340	394	407
CHHM40 - 618□ - AV - (B) - Ratio	30 (Note: 7)	4	1159	481	340	394	314	1411	481	340	394	510
CHHM15 - 619□ - AV - (B) - Ratio	11	4	995	467	261	324	346	1100	467	261	324	381
CHHM20 - 619□ - AV - (B) - Ratio	15	4	1090	511	340	394	422	1255	511	340	394	467
CHHM25 - 619□ - AV - (B) - Ratio	18.5	4	1090	511	340	394	422	1255	511	340	394	467
CHHM30 - 619□ - AV - (B) - Ratio	22	4	1090	511	340	394	437	1255	511	340	394	480
CHHM40 - 619□ - AV - (B) - Ratio	30 (Note: 7)	4	1235	511	340	394	477	1487	511	340	394	573
CHHM406 - 619□ - AV - (B) - Ratio	30 (Note: 7)	6	1235	511	340	394	477	1487	511	340	394	573
CHHM50 - 619□ - AV - (B) - Ratio	37 (Note: 7)	4	1235	511	340	394	478	1487	511	340	394	573
CHHM506 - 619□ - AV - (B) - Ratio	37 (Note: 7)	6	1290	511	390	484	569	-	-	-	-	-

Note: 4. □ indicates 0 or 5, expressing combination with reduction ratio. Refer to the Selection Table for details.
5. "B" after the suffix "AV" indicates models equipped with brake.
6. Dimensions of shaft end: Refer to pages F-28 to F-29 for details.
7. 30kW or over motors are air over type.
8. Dimensions in above drawings are subject to change without notice.

Dimension Tables (Horizontal Direction, Foot Mount)

CHHM□ - 6205 to 6255 - AV

Note: 1

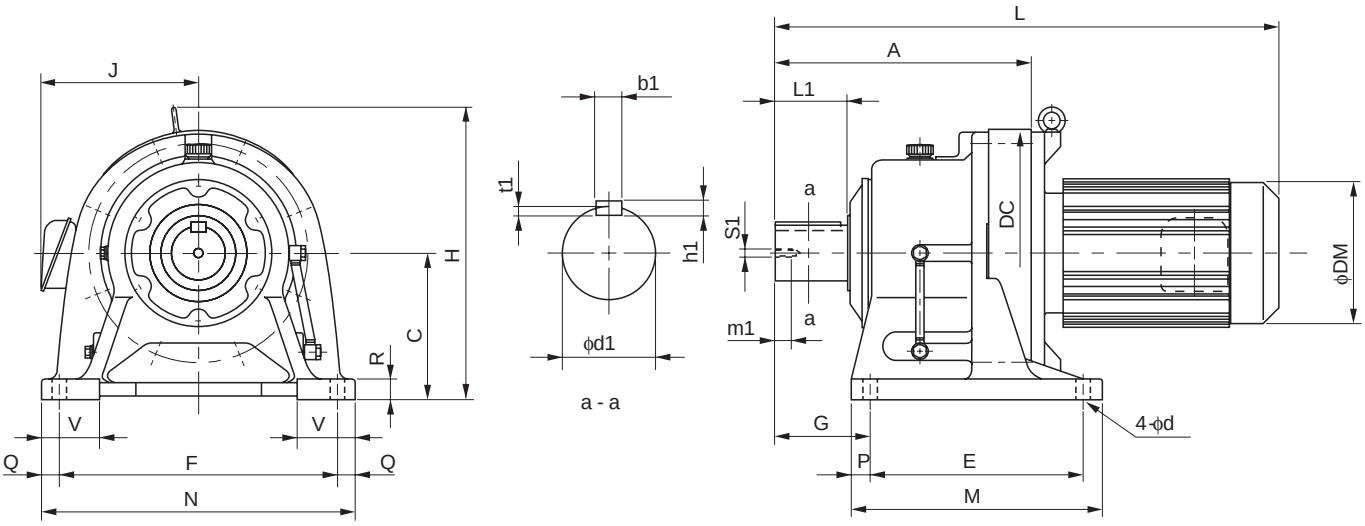

Frame size	A	C	DC	E	F	G	M	N	P	Q	R	V	d	Output Shaft Note: 2, 3, 6						
														d1	L1	b1	h1	t1	S1	m1
6205	502	250	448	360	440	215	440	530	40	45	35	100	26	100	165	28	16	10	M20	34
6215	526	265	485	395	480	210	475	580	40	50	40	110	26	110	165	28	16	10	M20	34
6225	566	280	526	420	540	230	520	620	50	40	40	115	33	120	165	32	18	11	M20	34
6235	628	300	562	460	580	260	560	670	50	45	45	120	33	130	200	32	18	11	M24	41
6245	657	335	614	480	630	263	580	720	50	45	45	128	39	140	200	36	20	12	M24	41
6255	775	375	670	520	670	320	630	780	55	55	50	140	39	160	240	40	22	13	M30	49

Model Note: 5	Motor		Standard					With Brake				
	[kW]	[P]	L	H	J	DM	W [kg]	L	H	J	DM	W [kg]
CHHM20 - 6205 - AV - (B) - Ratio	15	4	1127	530	340	394	443	1292	530	340	394	488
CHHM30 - 6205 - AV - (B) - Ratio	22	4	1127	530	340	394	456	1292	530	340	394	501
CHHM40 - 6205 - AV - (B) - Ratio	30 Note: 7	4	1272	530	340	394	496	1524	530	340	394	589
CHHM25 - 6215 - AV - (B) - Ratio	18.5	4	1151	575	340	394	520	1316	575	340	394	565
CHHM40 - 6215 - AV - (B) - Ratio	30 Note: 7	4	1296	575	340	394	573	1548	575	340	394	667
CHHM406 - 6215 - AV - (B) - Ratio	30 Note: 7	6	1296	575	340	394	573	1548	575	340	394	667
CHHM50 - 6215 - AV - (B) - Ratio	37 Note: 7	4	1296	575	340	394	573	1548	575	340	394	667
CHHM30 - 6225 - AV - (B) - Ratio	22	4	1191	610	340	394	618	1401	610	340	394	663
CHHM50 - 6225 - AV - (B) - Ratio	37 Note: 7	4	1336	610	340	394	658	1588	610	340	394	752
CHHM406 - 6235 - AV - (B) - Ratio	30 Note: 7	6	1398	667	340	394	751	1650	667	340	394	838
CHHM506 - 6245 - AV - (B) - Ratio	37 Note: 7	6	1482	729	390	484	967	-	-	-	-	-
CHHM506 - 6255 - AV - (B) - Ratio	37 Note: 7	6	1600	815	390	484	1286	-	-	-	-	-

Note: 1. □ indicates motor capacity.
2. Dimension of shaft end diameter: Dimension tolerance conforms to JIS B 0401-1976 "h6."
3. Dimension of shaft end key: Dimension tolerance conforms to JIS B 1301-1996 "Parallel Key."

Dimension Tables (Universal Direction, Foot Mount)

CNHM[Note: 1]- 607□DA to 612□DB - AV

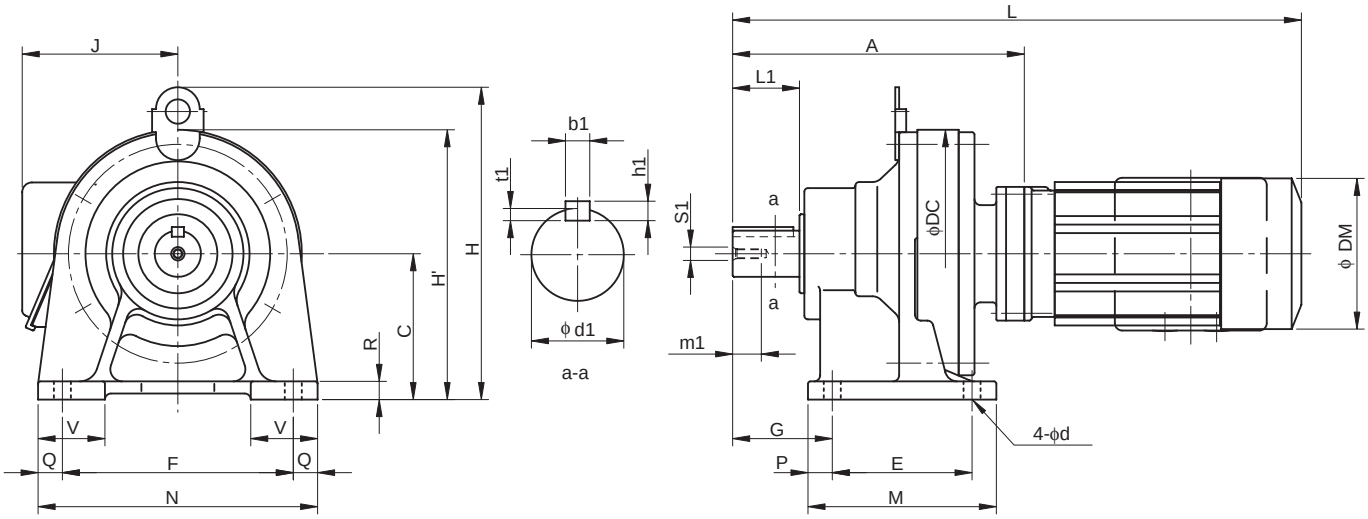

Frame size Note: 4	A	C	DC	E	F	G	M	N	P	Q	R	V	d	Output Shaft Note: 2, 3, 6						
														d1	L1	b1	h1	t1	S1	m1
607□DA	131	80	110	60	120	47	84	144	12	12	10	35	9	18	30	6	6	3.5	M6	16
609□DA	190	100	150	90	150	60	135	180	15	15	12	40	11	28	35	8	7	4	M8	20
610□DA	204	100	150	90	150	60	135	180	15	15	12	40	11	28	35	8	7	4	M8	20
612□DA	240	120	204	115	190	82	155	230	20	20	15	55	14	38	55	10	8	5	M8	20
612□DB	252	120	204	115	190	82	155	230	20	20	15	55	14	38	55	10	8	5	M8	20

Model Note: 4, 5	Motor		Standard						With Brake					
	[kW]	[P]	L	H	H'	J	DM	W [kg]	L	H	H'	J	DM	W [kg]
CNHM01 - 607□DA - AV - (B) - Ratio	0.1	4	311	-	140	130	124	10	339	-	138	130	124	11
CNHM01 - 609□DA - AV - (B) - Ratio	0.1	4	370	207	-	130	124	18	398	207	-	130	124	19
CNHM02 - 609□DA - AV - (B) - Ratio	0.2	4	386	207	-	130	124	19	418	207	-	130	124	20
CNHM01 - 610□DA - AV - (B) - Ratio	0.1	4	384	207	-	130	124	20	412	207	-	130	124	21
CNHM02 - 610□DA - AV - (B) - Ratio	0.2	4	400	207	-	130	124	21	432	207	-	130	124	22
CNHM01 - 612□DA - AV - (B) - Ratio	0.1	4	420	257	-	130	124	31	448	257	-	130	124	32
CNHM02 - 612□DA - AV - (B) - Ratio	0.2	4	436	257	-	130	124	32	468	257	-	130	124	33
CNHM05 - 612□DB - AV - (B) - Ratio	0.4	4	489	257	-	140	148	39	532	257	-	140	148	42
CNHM1 - 612□DB - AV - (B) - Ratio	0.75	4	516	257	-	145	160	42	578	257	-	145	160	47

Note: 4. □ indicates 0 or 5, expressing combination with reduction ratio. Refer to the Selection Table for details.
5. "B" after the suffix "AV" indicates models equipped with brake.
6. Dimensions of shaft end: Refer to pages F-28 to F-29 for details.
7. 30kW or over motors are air over type.
8. Dimensions in above drawings are subject to change without notice.

Dimension Tables (Horizontal Direction, Foot Mount)

CHHM□ Note: 1 - 613□DA to 618□DA - AV

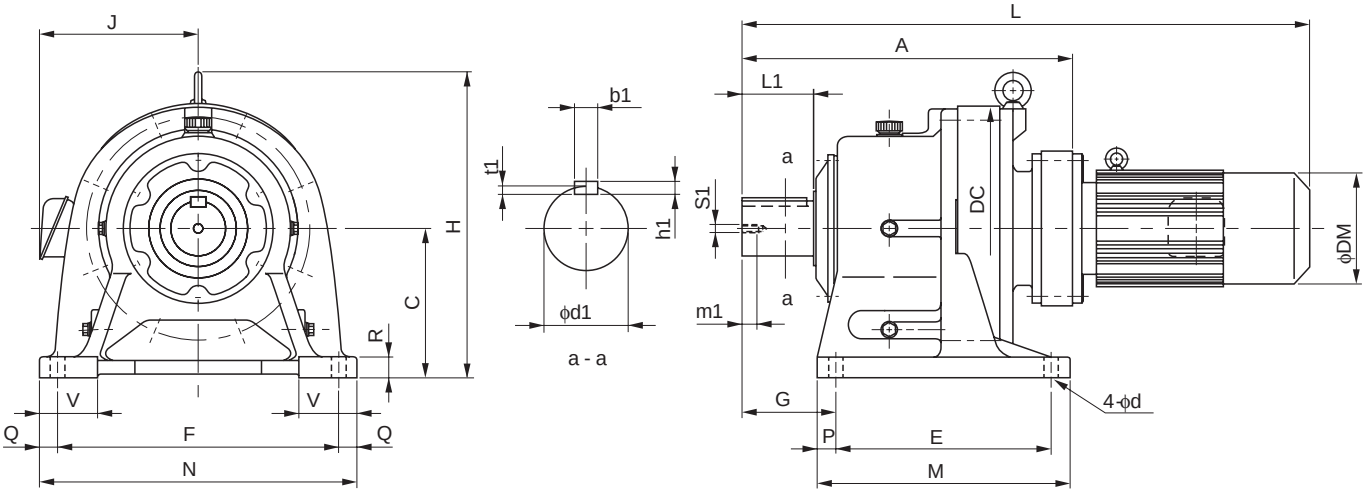

Frame size Note: 4	A	C	DC	E	F	G	M	N	P	Q	R	V	d	Output Shaft Note: 2, 3, 6						
														d1	L1	b1	h1	t1	S1	m1
613□DA	294	150	230	145	290	100	195	330	25	20	22	65	18	50	70	14	9	5.5	M10	18
613□DB	303	150	230	145	290	100	195	330	25	20	22	65	18	50	70	14	9	5.5	M10	18
613□DC	317	150	230	145	290	100	195	330	25	20	22	65	18	50	70	14	9	5.5	M10	18
614□DA	314	150	230	145	290	120	195	330	25	20	22	65	18	50	90	14	9	5.5	M10	18
614□DB	323	150	230	145	290	120	195	330	25	20	22	65	18	50	90	14	9	5.5	M10	18
614□DC	337	150	230	145	290	120	195	330	25	20	22	65	18	50	90	14	9	5.5	M10	18
616□DA	373	160	300	150	370	139	238	410	44	20	25	75	18	60	90	18	11	7	M10	18
616□DB	387	160	300	150	370	139	238	410	44	20	25	75	18	60	90	18	11	7	M10	18
617□DA	418	200	340	275	380	125	335	430	30	25	30	80	22	70	90	20	12	7.5	M12	24
617□DB	432	200	340	275	380	125	335	430	30	25	30	80	22	70	90	20	12	7.5	M12	24
618□DA	474	220	370	320	420	145	380	470	30	25	30	85	22	80	110	22	14	9	M12	24

Model Note: 4, 5	Motor		Standard					With Brake				
	[kW]	[P]	L	H	J	DM	W [kg]	L	H	J	DM	W [kg]
CHHM02 - 613□DA - AV - (B) - Ratio	0.2	4	490	300	130	124	47	522	300	130	124	48
CHHM05 - 613□DB - AV - (B) - Ratio	0.4	4	540	265	140	148	54	583	265	140	148	57
CHHM1 - 613□DB - AV - (B) - Ratio	0.75	4	573	270	145	160	57	635	270	145	160	62
CHHM2 - 613□DC - AV - (B) - Ratio	1.5	4	607	276	152	173	64	670	276	152	173	70
CHHM02 - 614□DA - AV - (B) - Ratio	0.2	4	510	300	130	124	48	542	300	130	124	49
CHHM05 - 614□DB - AV - (B) - Ratio	0.4	4	560	265	140	148	54	603	265	140	148	57
CHHM1 - 614□DB - AV - (B) - Ratio	0.75	4	593	270	145	160	57	655	270	145	160	62
CHHM2 - 614□DC - AV - (B) - Ratio	1.5	4	627	276	152	173	61	690	276	152	173	70
CHHM02 - 616□DA - AV - (B) - Ratio	0.2	4	569	349	130	124	91	601	349	130	124	93
CHHM05 - 616□DA - AV - (B) - Ratio	0.4	4	610	349	140	148	95	653	349	140	148	98
CHHM1 - 616□DA - AV - (B) - Ratio	0.75	4	643	349	145	160	99	705	349	145	160	104
CHHM2 - 616□DB - AV - (B) - Ratio	1.5	4	677	349	152	173	105	740	349	152	173	111
CHHM02 - 617□DA - AV - (B) - Ratio	0.2	4	614	416	130	124	126	646	416	130	124	128
CHHM05 - 617□DA - AV - (B) - Ratio	0.4	4	655	416	140	148	130	698	416	140	148	133
CHHM1 - 617□DA - AV - (B) - Ratio	0.75	4	688	416	145	160	134	750	416	145	160	139
CHHM2 - 617□DB - AV - (B) - Ratio	1.5	4	722	416	152	173	140	785	416	152	173	146
CHHM05 - 618□DA - AV - (B) - Ratio	0.4	4	711	451	140	148	176	754	451	140	148	178
CHHM1 - 618□DA - AV - (B) - Ratio	0.75	4	744	451	145	160	179	806	451	145	160	184
CHHM2 - 618□DA - AV - (B) - Ratio	1.5	4	764	451	152	173	183	827	451	152	173	189

Note: 1. □ indicates motor capacity.
2. Dimension of shaft end diameter: Dimension tolerance conforms to JIS B 0401-1976 "h6."
3. Dimension of shaft end key: Dimension tolerance conforms to JIS B 1301-1996 "Parallel Key."

Dimension Tables (Horizontal Direction, Foot-Mount)

CHHM□ (Note: 1) - 616□DC to 619□DB - AV

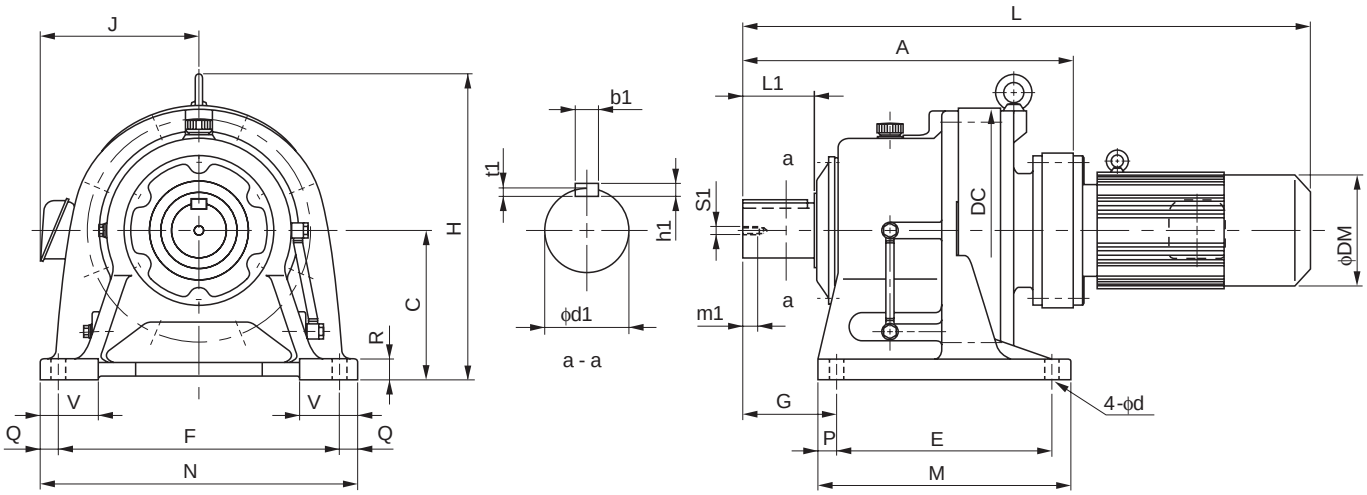

Frame size (Note: 4)	A	C	DC	E	F	G	M	N	P	Q	R	V	d	Output Shaft (Note: 2, 3, 6) d1	L1	b1	h1	t1	S1	m1
616□DC	389	160	300	150	370	139	238	410	44	20	25	75	18	60	90	18	11	7	M10	18
617□DC	436	200	340	275	380	125	335	430	30	25	30	80	22	70	90	20	12	7.5	M12	24
618□DB	496	220	370	320	420	145	380	470	30	25	30	85	22	80	110	22	14	9	M12	24
619□DA	556	250	430	380	480	170	440	530	30	25	35	90	26	95	135	25	14	9	M20	34
619□DB	572	250	430	380	480	170	440	530	30	25	35	90	26	95	135	25	14	9	M20	34

Model (Note: 4, 5)	Motor [kW]	Motor [P]	Standard L	Standard H	Standard J	Standard DM	Standard W [kg]	With Brake L	With Brake H	With Brake J	With Brake DM	With Brake W [kg]
CHHM3 - 616□DC - AV - (B) - Ratio	2.2	4	702	349	168	212	121	774	349	147	212	131
CHHM5 - 616□DC - AV - (B) - Ratio	3.7	4	746	349	168	212	128	818	349	147	212	138
CHHM3 - 617□DC - AV - (B) - Ratio	2.2	4	749	416	168	212	155	821	416	147	212	165
CHHM5 - 617□DC - AV - (B) - Ratio	3.7	4	793	416	168	212	162	865	416	147	212	172
CHHM3 - 618□DB - AV - (B) - Ratio	2.2	4	809	451	168	212	207	881	451	147	212	217
CHHM5 - 618□DB - AV - (B) - Ratio	3.7	4	853	451	168	212	214	925	451	147	212	224
CHHM8 - 618□DB - AV - (B) - Ratio	5.5	4	876	451	213	251	229	971	451	188	251	247
CHHM10 - 618□DB - AV - (B) - Ratio	7.5	4	936	451	213	251	243	1031	451	188	251	261
CHHM1 - 619□DA - AV - (B) - Ratio	0.75	4	826	531	145	160	254	888	531	119	160	259
CHHM2 - 619□DA - AV - (B) - Ratio	1.5	4	846	531	152	173	258	909	531	126	173	265
CHHM3 - 619□DA - AV - (B) - Ratio	2.2	4	869	531	168	212	268	941	531	147	212	278
CHHM5 - 619□DA - AV - (B) - Ratio	3.7	4	913	531	168	212	275	985	531	147	212	285
CHHM8 - 619□DB - AV - (B) - Ratio	5.5	4	952	531	213	251	297	1047	531	188	251	315
CHHM10 - 619□DB - AV - (B) - Ratio	7.5	4	1012	531	213	251	311	1107	531	188	251	329
CHHM15 - 619□DB - AV - (B) - Ratio	11	4	1102	531	232	324	363	1207	531	259	324	397

Note: 4. □ indicates 0 or 5, expressing combination with reduction ratio. Refer to the Selection Table for details.
5. "B" after the suffix "AV" indicates models equipped with brake.
6. Dimensions of shaft end: Refer to pages F-28 to F-29 for details.
7. 30kW or over motors are air over type.
8. Dimensions in above drawings are subject to change without notice.

Dimension Tables (Horizontal Direction, Foot Mount)

CHHM□ - 6205DA to 6225DB - AV

Note: 1

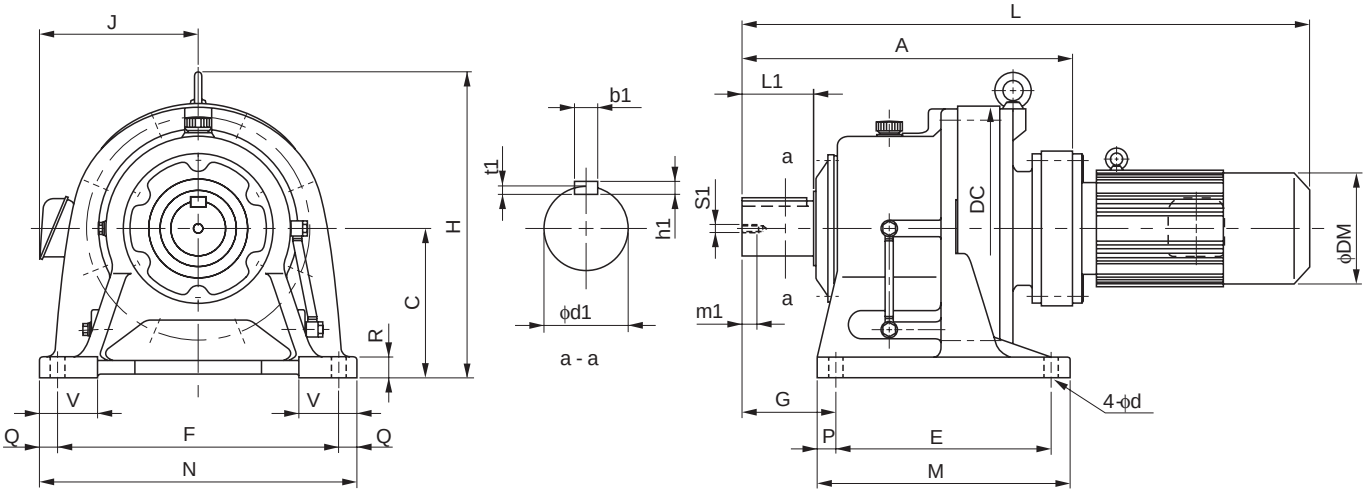

Frame size Note: 5	A	C	DC	E	F	G	M	N	P	Q	R	V	d	Output Shaft Note: 2, 3, 6						
														d1	L1	b1	h1	t1	S1	m1
6205DA	597	250	448	360	440	215	440	530	40	45	35	100	26	100	165	28	16	10	M20	34
6205DB	624	250	448	360	440	215	440	530	40	45	35	100	26	100	165	28	16	10	M20	34
6215DA	650	265	485	395	480	210	475	580	40	50	40	110	26	110	165	28	16	10	M20	34
6215DB	675	265	485	395	480	210	475	580	40	50	40	110	26	110	165	28	16	10	M20	34
6225DA	692	280	526	420	540	230	520	620	50	40	40	115	33	120	165	32	18	11	M20	34
6225DB	735	280	526	420	540	230	520	620	50	40	40	115	33	120	165	32	18	11	M20	34

Model Note: 4, 5	Motor		Standard					With Brake				
	[kW]	[P]	L	H	J	DM	W [kg]	L	H	J	DM	W [kg]
CHHM1 - 6205DA - AV - (B) - Ratio	0.75	4	867	530	145	160	273	929	530	145	160	278
CHHM3 - 6205DA - AV - (B) - Ratio	2.2	4	910	530	168	212	287	982	530	168	212	297
CHHM8 - 6205DB - AV - (B) - Ratio	5.5	4	1004	530	213	251	321	1099	530	213	251	339
CHHM10 - 6205DB - AV - (B) - Ratio	7.5	4	1064	530	188	251	334	1159	530	188	251	352
CHHM15 - 6205DB - AV - (B) - Ratio	11	4	1154	530	232	324	386	1249	530	259	324	419
CHHM2 - 6215DA - AV - (B) - Ratio	1.5	4	940	575	152	173	370	1003	575	152	173	377
CHHM3 - 6215DA - AV - (B) - Ratio	2.2	4	963	575	168	212	380	1035	575	168	212	390
CHHM5 - 6215DA - AV - (B) - Ratio	3.7	4	1007	575	168	212	387	1079	575	168	212	397
CHHM8 - 6215DA - AV - (B) - Ratio	5.5	4	1030	575	213	251	402	1125	575	213	251	420
CHHM10 - 6215DA - AV - (B) - Ratio	7.5	4	1090	575	188	251	415	1185	575	188	251	433
CHHM15 - 6215DA - AV - (B) - Ratio	11	4	1180	575	232	324	467	1285	575	259	324	501
CHHM20 - 6215DB - AV - (B) - Ratio	15	4	1300	575	297	394	564	1465	575	297	394	615
CHHM2 - 6225DA - AV - (B) - Ratio	1.5	4	982	610	152	173	444	1045	640	152	173	451
CHHM3 - 6225DA - AV - (B) - Ratio	2.2	4	1005	610	168	212	454	1077	610	168	212	464
CHHM5 - 6225DA - AV - (B) - Ratio	3.7	4	1049	610	168	212	461	1121	610	168	212	471
CHHM8 - 6225DA - AV - (B) - Ratio	5.5	4	1072	610	213	251	476	1167	610	213	251	494
CHHM10 - 6225DA - AV - (B) - Ratio	7.5	4	1132	610	213	251	490	1227	610	213	251	508
CHHM15 - 6225DA - AV - (B) - Ratio	11	4	1222	610	232	324	542	1327	610	259	324	576
CHHM20 - 6225DB - AV - (B) - Ratio	15	4	1360	610	340	394	661	1525	610	340	394	712
CHHM25 - 6225DB - AV - (B) - Ratio	18.5	4	1360	610	340	394	661	1525	610	340	394	712
CHHM30 - 6225DB - AV - (B) - Ratio	22	4	1360	610	340	394	678	1525	610	340	394	729

Note: 1. □ indicates motor capacity.
2. Dimension of shaft end diameter: Dimension tolerance conforms to JIS B 0401-1976 "h6."
3. Dimension of shaft end key: Dimension tolerance conforms to JIS B 1301-1996 "Parallel Key."

Dimension Tables (Horizontal Direction, Foot Mount)

CHHM☐ - 6235DA to 6255DB - AV

Note: 1

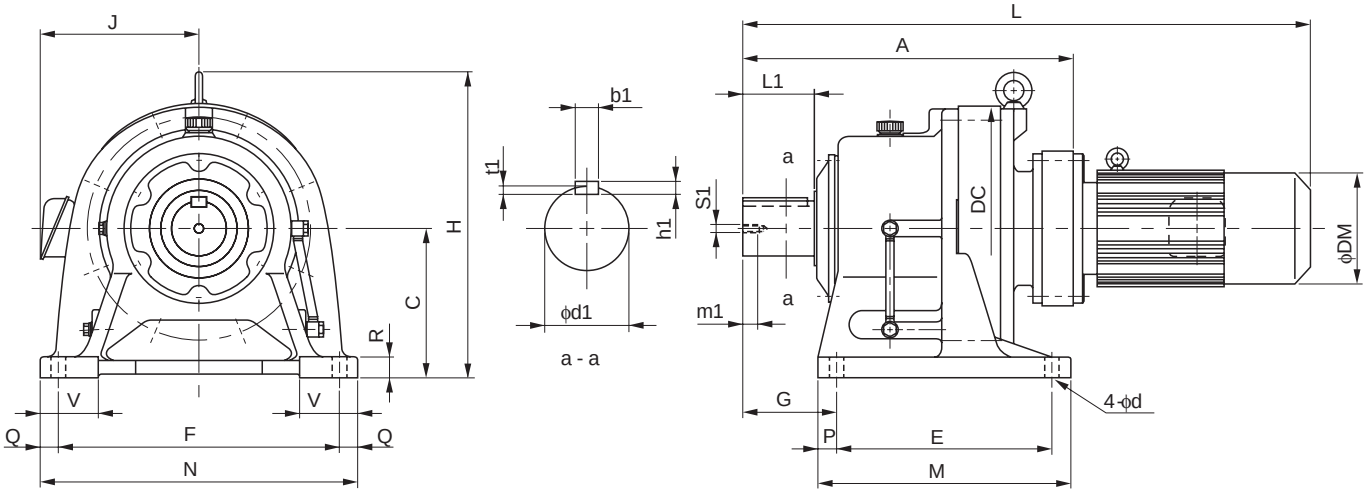

Frame size	A	C	DC	E	F	G	M	N	P	Q	R	V	d	Output Shaft Note: 2, 3, 6						
														d1	L1	b1	h1	t1	S1	m1
6235DA	778	300	562	460	580	260	560	670	50	45	45	120	33	130	200	32	18	11	M24	41
6235DB	800	300	562	460	580	260	560	670	50	45	45	120	33	130	200	32	18	11	M24	41
6245DA	816	335	614	480	630	263	580	720	50	45	45	128	39	140	200	36	20	12	M24	41
6245DB	837	335	614	480	630	263	580	720	50	45	45	128	39	140	200	36	20	12	M24	41
6255DA	956	375	670	520	670	320	630	780	55	55	50	140	39	160	240	40	22	13	M30	49
6255DB	978	375	670	520	670	320	630	780	55	55	50	140	39	160	240	40	22	13	M30	49

Model Note: 5	Motor		Standard					With Brake				
	[kW]	[P]	L	H	J	DM	W [kg]	L	H	J	DM	W [kg]
CHHM3 - 6235DA - AV - (B) - Ratio	2.2	4	1091	667	168	212	570	1163	667	168	212	580
CHHM5 - 6235DA - AV - (B) - Ratio	3.7	4	1135	667	168	212	577	1207	667	168	212	587
CHHM8 - 6235DA - AV - (B) - Ratio	5.5	4	1163	667	213	251	593	1258	667	213	251	610
CHHM10 - 6235DA - AV - (B) - Ratio	7.5	4	1223	667	213	251	607	1318	667	213	251	624
CHHM15 - 6235DA - AV - (B) - Ratio	11	4	1308	667	261	324	660	1413	667	261	324	694
CHHM20 - 6235DA - AV - (B) - Ratio	15	4	1403	667	340	394	737	1568	667	340	394	788
CHHM25 - 6235DB - AV - (B) - Ratio	18.5	4	1425	667	340	394	782	1590	667	340	394	825
CHHM30 - 6235DB - AV - (B) - Ratio	22	4	1425	667	340	394	782	1590	667	340	394	825
CHHM40 - 6235DB - AV - (B) - Ratio	30 Note: 7	4	1570	667	340	394	822	1822	667	340	394	918
CHHM3 - 6245DA - AV - (B) - Ratio	2.2	4	1129	729	168	212	679	1201	729	168	212	689
CHHM5 - 6245DA - AV - (B) - Ratio	3.7	4	1173	729	168	212	686	1245	729	168	212	696
CHHM8 - 6245DA - AV - (B) - Ratio	5.5	4	1201	729	213	251	702	1296	729	213	251	719
CHHM10 - 6245DA - AV - (B) - Ratio	7.5	4	1261	729	213	251	716	1356	729	213	251	733
CHHM15 - 6245DA - AV - (B) - Ratio	11	4	1346	729	261	324	769	1451	729	261	324	803
CHHM20 - 6245DA - AV - (B) - Ratio	15	4	1441	729	340	394	840	1606	729	340	394	891
CHHM25 - 6245DB - AV - (B) - Ratio	18.5	4	1462	729	340	394	866	1627	729	340	394	917
CHHM30 - 6245DB - AV - (B) - Ratio	22	4	1462	729	340	394	883	1627	729	340	394	926
CHHM40 - 6245DB - AV - (B) - Ratio	30 Note: 7	4	1607	729	340	394	937	1859	729	340	394	1033
CHHM5 - 6255DA - AV - (B) - Ratio	3.7	4	1328	815	168	212	1041	1400	815	168	212	1049
CHHM8 - 6255DA - AV - (B) - Ratio	5.5	4	1346	815	213	251	1056	1441	815	213	251	1071
CHHM10 - 6255DA - AV - (B) - Ratio	7.5	4	1406	815	213	251	1071	1501	815	213	251	1086
CHHM15 - 6255DA - AV - (B) - Ratio	11	4	1486	815	261	324	1103	1591	815	261	324	1157
CHHM20 - 6255DA - AV - (B) - Ratio	15	4	1581	815	340	394	1195	1746	815	340	394	1246
CHHM25 - 6255DA - AV - (B) - Ratio	18.5	4	1581	815	340	394	1195	1746	815	340	394	1246
CHHM30 - 6255DA - AV - (B) - Ratio	22	4	1581	815	340	394	1215	1746	815	340	394	1258
CHHM40 - 6255DB - AV - (B) - Ratio	30 Note: 7	4	1748	815	340	394	1325	2000	815	340	394	1421
CHHM50 - 6255DB - AV - (B) - Ratio	37 Note: 7	4	1748	815	340	394	1325	2000	815	340	394	1421

Note: 4. ☐ indicates 0 or 5, expressing combination with reduction ratio. Refer to the Selection Table for details.
5. "B" after the suffix "AV" indicates models equipped with brake.
6. Dimensions of shaft end: Refer to pages F-28 to F-29 for details.
7. 30kW or over motors are air over type.
8. Dimensions in above drawings are subject to change without notice.

Dimension Tables (Horizontal Direction, Foot Mount)

CHHM□ - 6265DA to 6275DA - AV

Note: 1

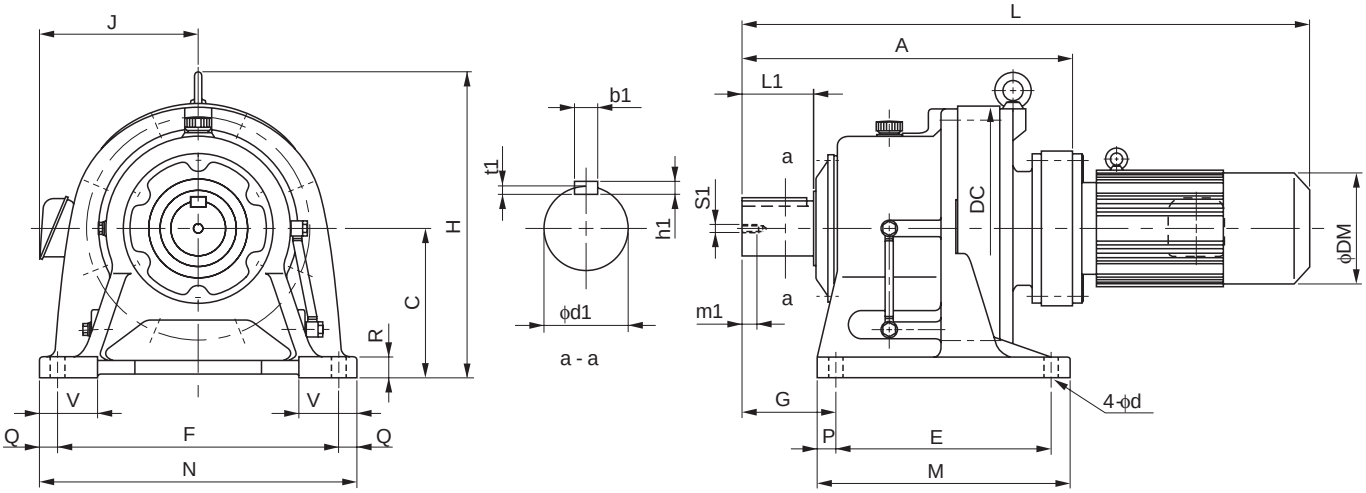

Frame size	A	C	DC	E	F	G	M	N	P	Q	R	V	d	Output Shaft Note: 2, 3, 6						
														d1	L1	b1	h1	t1	S1	m1
6265DA	1088	400	736	590	770	390	700	880	55	55	55	160	45	170	300	40	22	13	M30	49
6275DA	1349	540	950	420	1050	485	1040	1160	100	55	60	200	45	180	330	45	25	15	M30	52

Model Note: 5	Motor		Standard					With Brake				
	[kW]	[P]	L	H	J	DM	W [kg]	L	H	J	DM	W [kg]
CHHM8 - 6265DA - AV - (B) - Ratio	5.5	4	1493	874	213	251	1381	1588	874	213	251	1401
CHHM10 - 6265DA - AV - (B) - Ratio	7.5	4	1553	874	213	251	1396	1648	874	213	251	1411
CHHM15 - 6265DA - AV - (B) - Ratio	11	4	1618	874	261	324	1446	1723	874	261	324	1482
CHHM20 - 6265DA - AV - (B) - Ratio	15	4	1713	874	340	394	1525	1878	874	340	394	1570
CHHM25 - 6265DA - AV - (B) - Ratio	18.5	4	1713	874	340	394	1525	1878	874	340	394	1570
CHHM30 - 6265DA - AV - (B) - Ratio	22	4	1713	874	340	394	1540	1878	874	340	394	1583
CHHM40 - 6265DA - AV - (B) - Ratio	30 Note: 7	4	1858	874	340	394	1577	2110	874	340	394	1673
CHHM50 - 6265DA - AV - (B) - Ratio	37 Note: 7	4	1858	874	340	394	1577	2110	874	340	394	1673
CHHM10 - 6275DA - AV - (B) - Ratio	7.5	4	1814	1161	213	251	2531	1909	1161	213	251	2546
CHHM15 - 6275DA - AV - (B) - Ratio	11	4	1879	1161	261	324	2581	1984	1161	261	324	2617
CHHM20 - 6275DA - AV - (B) - Ratio	15	4	1974	1161	340	394	2660	2139	1161	340	394	2705
CHHM25 - 6275DA - AV - (B) - Ratio	18.5	4	1974	1161	340	394	2660	2139	1161	340	394	2705
CHHM30 - 6275DA - AV - (B) - Ratio	22	4	1974	1161	340	394	2675	2139	1161	340	394	2718
CHHM40 - 6275DA - AV - (B) - Ratio	30 Note: 7	4	2089	1161	340	394	2713	2304	1161	340	394	2810
CHHM50 - 6275DA - AV - (B) - Ratio	37 Note: 7	4	2089	1161	340	394	2713	2304	1161	340	394	2810

Note: 1. □ indicates motor capacity.
2. Dimension of shaft end diameter: Dimension tolerance conforms to JIS B 0401-1976 "h6."
3. Dimension of shaft end key: Dimension tolerance conforms to JIS B 1301-1996 " Parallel Key ".

Dimension Tables (Universal Direction, Foot Mount)

CNHM☐- 610H, 612H - AV (Center Height Option)

Note: 2

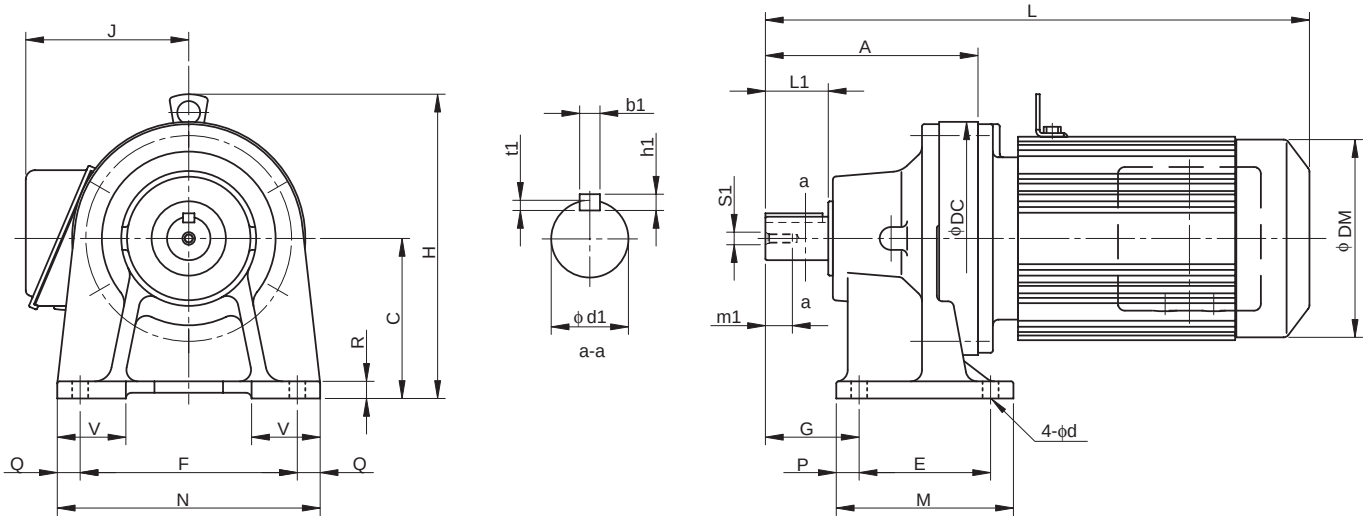

Frame size	A	C	DC	E	F	G	M	N	P	Q	R	V	d	Output Shaft Note: 2, 3, 6						
														d1	L1	b1	h1	t1	S1	m1
610H	156	120	150	90	150	60	135	180	15	15	12	40	11	28	35	8	7	4	M8	20
612H	186	140	204	115	190	82	155	230	20	20	15	60	14	38	55	10	8	5	M8	20

Model Note: 4	Motor		Standard						With Brake					
	[kW]	[P]	L	H	H'	J	DM	W [kg]	L	H	H'	J	DM	W [kg]
CNHM02 - 610H - AV - (B) - Ratio	0.2	4	352	227	-	130	124	20	384	227	-	130	124	22
CNHM05 - 610H - AV - (B) - Ratio	0.4	4	393	233	-	140	148	24	436	233	-	140	148	27
CNHM1 - 610H - AV - (B) - Ratio	0.75	4	426	240	-	145	160	28	488	240	-	145	160	33
CNHM2 - 610H - AV - (B) - Ratio	1.5	4	446	246	-	152	173	32	509	246	-	152	173	38
CNHM2 - 612H - AV - (B) - Ratio	1.5	4	476	266	-	152	173	41	539	266	-	152	173	48
CNHM3 - 612H - AV - (B) - Ratio	2.2	4	499	286	-	168	212	51	571	286	-	168	212	61
CNHM5 - 612H - AV - (B) - Ratio	3.7	4	543	286	-	168	212	58	615	286	-	168	212	68

Note: 4. ☐ indicates 0 or 5, expressing combination with reduction ratio. Refer to the Selection Table for details.
5. "B" after the suffix "AV" indicates models equipped with brake.
6. Dimensions of shaft end: Refer to pages F-28 to F-29 for details.
7. 30kW or over motors are air over type.
8. Dimensions in above drawings are subject to change without notice.

Dimension Tables (Horizontal Direction, Foot-Mount)

CHHM□ - 614H, 616H - AV (Center Height Option)

Note: 2

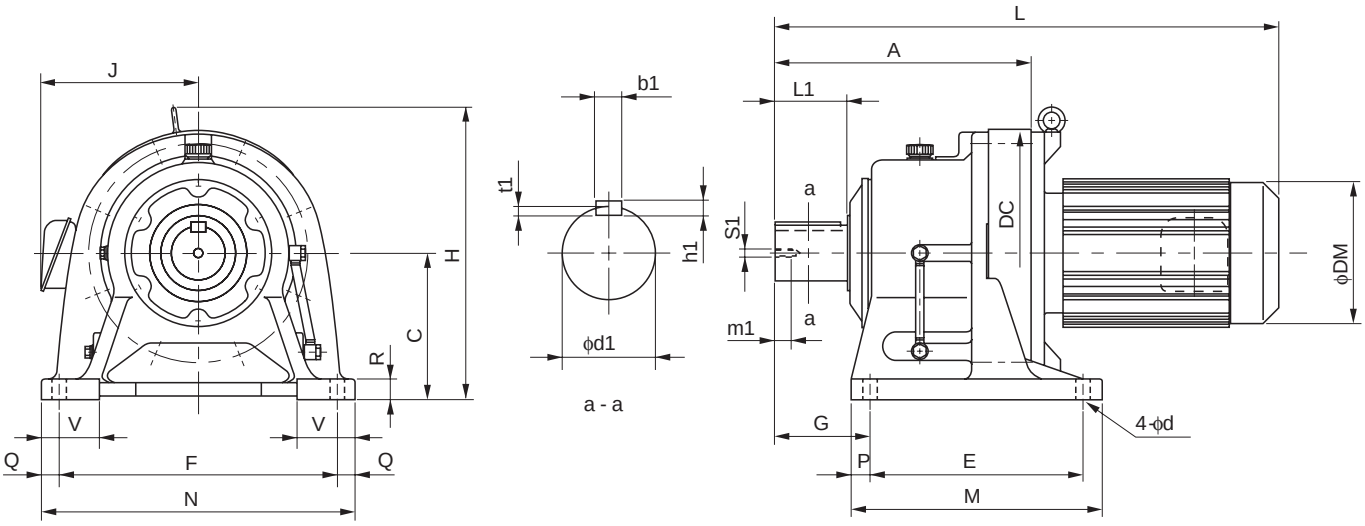

Frame size	A	C	DC	E	F	G	M	N	P	Q	R	V	d	Output Shaft Note: 2, 3, 6						
														d1	L1	b1	h1	t1	S1	m1
614H	260	160	230	145	290	120	195	330	25	20	22	70	18	50	90	14	9	5.5	M10	18
616H	308	200	300	150	370	139	238	410	44	20	25	80	18	60	90	18	11	7	M10	18

Model Note: 4	Motor		Standard					With Brake				
	[kW]	[P]	L	H	J	DM	W [kg]	L	H	J	DM	W [kg]
CHHM3 - 614H - AV - (B) - Ratio	2.2	4	573	306	168	212	71	645	306	168	212	81
CHHM5 - 614H - AV - (B) - Ratio	3.7	4	617	306	168	212	78	689	306	168	212	88
CHHM8 - 614H - AV - (B) - Ratio	5.5	4	640	333	213	251	93	735	333	213	251	111
CHHM10 - 614H - AV - (B) - Ratio	7.5	4	700	333	213	251	107	795	333	213	251	125
*CHHM15 - 614H - AV - (B) - Ratio	11	4	790	368	261	324	159	895	368	261	324	193
CHHM3 - 616H - AV - (B) - Ratio	2.2	4	621	350	168	212	111	693	350	168	212	121
CHHM5 - 616H - AV - (B) - Ratio	3.7	4	665	350	168	212	118	737	350	168	212	128
CHHM8 - 616H - AV - (B) - Ratio	5.5	4	693	373	213	251	134	788	373	213	251	151
CHHM10 - 616H - AV - (B) - Ratio	7.5	4	753	373	213	251	148	848	373	213	251	165
CHHM15 - 616H - AV - (B) - Ratio	11	4	838	408	261	324	201	943	408	261	324	235
CHHM20 - 616H - AV - (B) - Ratio	15	4	933	408	340	394	273	1098	408	340	394	324

"*" indicates models with bottom level of the motor lower than the reducer base.

Note: 1. □ indicates motor capacity.
2. Dimension of shaft end diameter: Dimension tolerance conforms to JIS B 0401-1976 "h6."
3. Dimension of shaft end key: Dimension tolerance conforms to JIS B 1301-1996 "Parallel Key."
4. "B" after the suffix "AV" indicates models equipped with brake.
5. Dimensions of shaft end: Refer to pages F-28 to F-29 for details.
6. Dimensions in above drawings are subject to change without notice.

E

CYCLO® GEARMOTORS with High Efficiency Motor

	Page
Product Introduction	E-2
High Efficiency Regulation and Standard	E-4
Basic Gearmotor with High Efficiency Motor Specification	E-5

* This section contains a brief description on CYCLO® GEARMOTORS with high efficiency motor.

CYCLO® DRIVE with High Efficiency Motor 6000 Series

Sumitomo Drive Technologies have developed a high efficiency motor lineup for CYCLO® DRIVE to prevent global warming. It helps curb greenhouse gas emission and satisfies your needs for motors, conforming to energy conservation laws, in various countries that requires power consumption reduction in factories and offices.

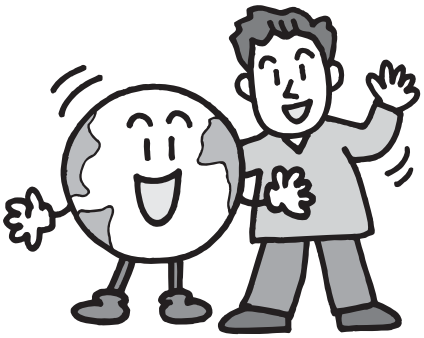

1. Energy Conservation and High Economical Efficiency
Combination of high efficiency motor and CYCLO® DRIVE 6000 SERIES enables enhanced energy conservation and higher economic efficiency.

2. Conformity to High Efficiency JIS Standard
Our high-efficiency motor conforms to JISC4212, "High Efficiency Low Voltage Three-Phase Squirrel Cage Motor" enacted on July 20, 2000.

3. Conformity to International Standards
Gearmotor series lineup conforms to safety standards and high efficiency regulation of North America.
- Products conform to UL and CSA standards.
- Products conform to EPAct and NRCan

4. Lightweight and Compact
High grade materials and aluminum frame actualized the most compact and lightweight high efficiency motor.

5. Inverter Drive
Continuous operation at 1:10 with constant torque is enabled by combination of inverter, by reducing loss.

HF-320α

HF-430

Note: Sumitomo inverters HF-320α and HF-430 Series include sensorless vector control function.
Always let us know when operating with inverter drive. CYCLO® combination selection requires consideration on lubrication and torque for slow speed operation. In addition, inverter drive operation for 400V class and above requires specific insulation measures.

Continuously Evolving CYCLO® DRIVE

Tooth Profile without Breakage[Note]

CYCLO® DRIVE is a tough reducer with long lifetime with contact ratio 2 to 3 times more compared to the involute gear. This is enabled by cycloidal tooth profile of internal gear and epitrochoidal parallel curve of external gear. High-carbon chromium bearing steel, with abrasion and fatigue resistant properties, is used for the reducer part.

Note: Only when used within the rated torque.

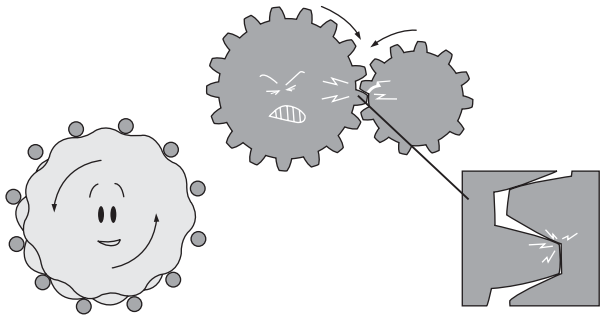

CYCLO® DRIVE has smooth rolling contact.

Involute gear has slip contact with less contact ratio.

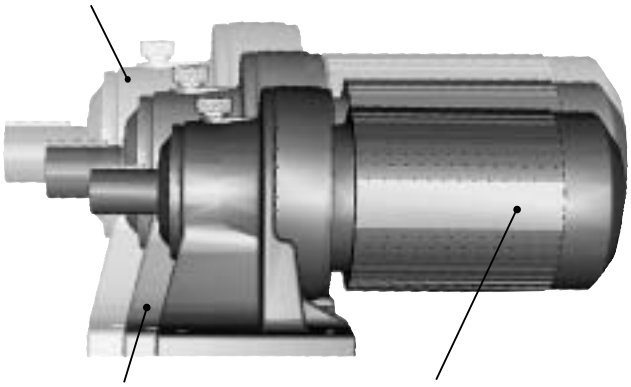

Size comparison of the combination with same capacity and reduction ratio

Lightweight and Compact

Combination of internal planetary mechanism and cycloidal tooth profile actualized lightweight and compact reducer mechanism. This is why we can easily produce reducers with high reduction ratio which were simply impossible by involute gear stages, such as 1/6~1/119 by single reduction, 1/104~1/7569 by double reduction, and 1/9251~1/658603 by triple reduction. Further, with CYCLO® DRIVE 6000 Series, we enabled space-saving by developing high load capacity. We cut down the reducer mass by maximum 40% compared to our conventional gearmotors.

■ Economy of High Efficiency Motor

Running cost may be lowered by reducing loss using high efficiency motors instead of standard motors. Energy conservation effect will be larger for longer operations at constant speed.

Economy of High Efficiency Motor

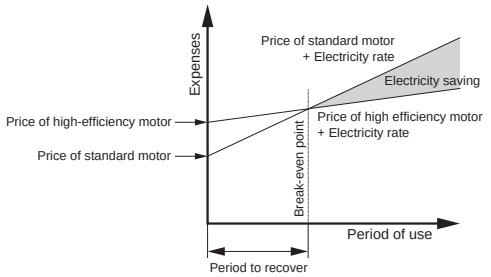

■ Calculation Example of the Energy-Saving Effect

1. Annual saving on the electricity bill:

   Annual saving on electricity bill [JPY/yr] = Input difference of standard motor and high efficiency motor [kW] × Operation time [hr/yr] × Electricity bill [JPY/kWh]

2. Collection period for money paid on high-efficiency motor:

   Collection period [yr] = Price of high efficiency motor [JPY] − Price of standard motor [JPY] / Annual saving on electricity bill [JPY/yr]

3. Example

   Standard motor is replaced with a high efficiency motor under the following condition:
   4-pole; 2.2kW; 220V-60Hz; 50 units; Load factor: 100%; Annual operation: 4,000 hr/yr; Electricity rate: 16JPY/kWh
   Annual saving [JPY/yr]

   $$= \left[\frac{100}{83.0} + \frac{100}{87.0}\right] \times 2.2\text{kW} \times 50 \text{ units} \times 4{,}000\text{hr/yr} \times 16\text{JPY/kWh}$$

   = 390,000 JPY/yr

CYCLO® GEARMOTORS with High Efficiency Motor

High-Efficiency Regulations and Standards

1. High Efficiency Regulations

US: According to the Energy Policy Act of 1992 (EPAct), motors and other products with built-in motors sold in the US later than October 24, 1997 are subject to this energy-efficiency regulation. Motors which fail to conform to the standards are penalized. (Subject capacity: 1-200HP; voltage: 230 & 460V; for commercial power supply). Although gearmotors are not included at this point, they may also become subject, observing the movement in Canada,

Canada: Natural Resources Canada (NRCan) enacted the Energy Efficiency Act (EEAct) in 1992 and the Energy Efficiency Regulation (EER) in 1995. These regulations are applied to standard motors imported to Canada starting February 3, 1995. Additional regulations were applied to gearmotors and explosion-proof motors imported after November 27, 1999.
Motors and gearmotors which do not conform to the efficiency standard are prohibited for import. This requires all gearmotors to be high efficiency. (Subject capacity: 1-200HP; frame: IEC 90 or larger; voltage: 600V or less; for constant-speed motors).

Japan: Law concerning the Rational Use of Energy (comprehensive law promoting efficient energy use and energy waste elimination) was enacted in 1997 and "Reduction of annual energy consumption at factories by 1% on average" was announced. Furthermore, "Promotion on systematic energy-saving investment" and "Expansion of object factories and offices" were revised in April 1999. Use of high efficiency motor is recommended for the factory owners.

2. Standards

UL Standards: (US) Safety standards required primarily in the US. In the US, this standard is most generally applied to motored machines and is frequently quoted during negotiations for import. UL standards assure safety of equipment, appliances, and materials in order to protect human life and assets from fire and other accidents. UL conformity products are recommended also for observing the Product Liability (PL) Law.

CSA Standards: (Canada) Safety standards required in Canada. This is an arbitrary standards developed voluntarily by the members of association. However, most of the standards have been adopted officially as Canadian national standards and are quoted in laws and ordinances by the federal and state government and other local authorities. The CSA standards adopted as the Canadian national standards prefix with "CAN," followed with the number, for differentiation (Ex. CAN/CSA C22.1).

JIS: (Japan) Technical reference organized by Japan Electrical Manufacturers' Association (JEMA) has been applied previously. In July 2000, standard for high efficiency motors, "Low-voltage three-phase squirrel-cage high efficiency induction motors, JIS C 4212" was added in Japanese Industrial Standards (JIS).

Table of Models

Combinations with 4P Motor **Reduction Ratio 6~273**

Reduction Ratio		6	8	11	13	15	17	21	25	29	35	43	51	59	71	87	119	104 (13 × 8)	121 (11 × 11)	143 (13 × 11)	165 (15 × 11)	195 (15 × 13)	231 (21 × 11)	273 (21 × 13)
Output Speed r/min	50Hz	242	181	132	112	96.7	85.3	69.0	58.0	50.0	41.4	33.7	28.4	24.6	20.4	16.7	12.2	13.9	12.0	10.1	8.79	7.44	6.28	5.31
	60Hz	292	219	159	135	117	103	83.3	70.0	60.3	50.0	40.7	34.3	29.7	24.6	20.1	14.7	16.8	14.5	12.2	10.6	8.97	7.58	6.41
Motor (kW × P)	0.2 × 4	●	●	●	●	●	●	●	●	●	●	●	●	●	●	●	●	●	●	●	●	●	●	●
	0.4 × 4	●	●	●	●	●	●	●	●	●	●	●	●	●	●	●		●	●	●	●	●	●	●
	0.75 × 4	●	●	●	●	●	●	●	●	●	●	●	●	●	●	●		●	●	●	●	●	●	●
	1.5 × 4	●	●	●	●	●	●	●	●	●	●	●	●	●	●	●		●	●	●	●	●	●	●
	2.2 × 4	●	●	●	●	●	●	●	●	●	●	●	●	●	●	●		●	●	●	●	●	●	●
	3.7 × 4	●	●	●	●	●	●	●	●	●	●	●	●	●	●	●		●	●	●	●	●	●	●
	5.5 × 4	●	●	●	●	●	●	●	●	●	●	●	●	●	●	●		●	●	●	●	●	●	●
	7.5 × 4	●	●	●	●	●	●	●	●	●	●	●	●	●	●	●		●	●	●	●	●	●	●
	11 × 4	●	●	●	●	●	●	●	●	●	●	●	●	●	●	●		●	●	●	●	●	●	●
	15 × 4	●	●	●	●	●	●	●	●	●	●	●	●	●	●	●		●	●		●	●	●	●
	18.5 × 4	●	●	●	●	●	●	●	●	●	●	●	●	●	●	●			●		●	●	●	●
	22 × 4	●	●	●	●	●	●	●	●	●	●	●	●	●					●		●	●	●	●
	30 × 4	●	●	●	●	●	●	●	●	●	●	●	●	●					●		●	●	●	

*Consult us for 6000SK Series (Reduction Ratio 2.5~10).

CYCLO® GEARMOTORS with High Efficiency Motor

High Efficiency Motor

Table E-1 3-Phase Induction Motor without Built-in Brakes

◎: Standard Type ○: Produced on order

Specification / Output [kW]	Poles	Indoor type (IP44)	Outdoor type (IP44)	Insulation class E	Insulation class B	Insulation class F
		4	4	4	4	4
0.2		◎	○	◎	○	○
0.4		◎	○	◎	○	○
0.75		◎	○		◎	○
1.5		◎	○		◎	○
2.2		◎	○		◎	○
3.7		◎	○		◎	○
5.5		◎	○		◎	○
7.5		◎	○		◎	○
11		◎	○		◎	○
15		◎	○		◎	○
18.5		◎	○		◎	○
22		◎	○		◎	○
30		◎	○		◎	○
Remarks		Continuous rating, power source specification		200V 50/60Hz, 220V 60Hz (400V 50/60Hz, 440V 60Hz)		

Table E-2 3-Phase Induction Motor with Built-in Brakes

◎: Standard Type ○: Produced on order

Specification / Output [kW]	Poles	Indoor type (IP44)	Outdoor type (IP44)	Insulation class E	Insulation class B	Insulation class F
		4	4	4	4	4
0.2		◎	○	◎	○	○
0.4		◎	○	◎	○	○
0.75		◎	○		◎	○
1.5		◎	○		◎	○
2.2		◎	○		◎	○
3.7		◎	○		◎	○
5.5		◎	○		◎	○
7.5		◎	○		◎	○
11		◎	○		◎	○
15		◎	○		◎	○
18.5		◎	○		◎	○
22		◎	○		◎	○
30		◎	○		◎	○
Remarks		Continuous rating, power source specification		200V 50/60Hz, 220V 60Hz (400V 50/60Hz, 440V 60Hz)		

Note:
1. Consult us for specifications not indicated in above tables. They may be produced on order. Characteristics, dimension, and CYCLO® DRIVE combinations may be changed depending on the specification. Example: 6P, special voltage, dust-proof type, humidity-proof, tropical treatment, high-temperature use, double shaft extention (round or square shaft), EPAct conformity, NRCan conformity, etc.
2. Consult us with information on operation condition (ambient temperature, input speed, mounting style, load condition, etc.) when driving our high-efficiency motor with inverter. CYCLO® DRIVE combination selection requires contemplation on startup, lubrication, thermal rating, etc.
3. Consult us when driving our high-efficiency motor with high carrier frequency type (IGBT, etc.) at high input voltage (400V and above) or with long wiring distance. Motor insulation may be necessary.
4. Protection nomenclature for outdoor type is IP44. Consult us for operation in locations with exposure to elements or with frequent water splash.

MEMO

F

TECHNICAL DATA

	Page
1. Reducer	
Mechanism	F-3
Lubrication	F-4
Nameplate	F-8
Allowable Radial and Axial Load	F-10
Moment of Inertia (GD^2)	F-17
Construction Drawing	F-25
Detailed Dimension of Slow Speed Shaft	F-28
2. Motor	
Terminal Box Specifications	F-32
Characteristics for Global Motor	F-36
Characteristics for Japan Standard Motor	F-38
Specification and Constructions of Built-in Brake	F-40
Connection	F-44
Example of Connection	F-45
Protection and Cooling	F-56
International Standards and Compliance of Sumitomo Products	F-57
EC Directives and CE Marking	F-60
International Power Source Voltage and Conditions	F-62
3. Common	
Paint and Rustproof Coating	F-64
Drive System Formulas	
Reference Materials	F-66

F TECHNICAL DATA

1. Reducer

Mechanism

The reducer portion of the CYCLO® GEARMOTOR is fundamentally different in principle and mechanism from the involute gearing mechanism of competitor's gearmotors. Our unique speed reducer part is an ingenious combination of the following two mechanisms:

- A combination of a planet gear and a fixed internal sun gear. In the CYCLO® GEARMOTOR, the planet gear has cycloidal-shaped teeth and the sun gear has circular pin teeth.
  The number of teeth in the planet gear is one or two less than the sun gear.
- A constant speed internal gearing mechanism.

See Fig.F-1
In equation 1 below, P identifies the number of the planet gear teeth, S that of the sun gear, and ω2 the angular velocity of the planet gear around its own axis. The velocity ratio of ω2 to ω1 is shown as follows:

$$\frac{\omega 2}{\omega 1} = 1 - \frac{S}{P} = -\frac{S-P}{P} \quad \cdots \text{Equation 1}$$

With S greater by one or two than P in this equation, the highest velocity ratio is obtainable.
That is, if S-P=1 is applied to Equation 1, the velocity ratio may be calculated from the following equation:

$$\frac{\omega 2}{\omega 1} = \frac{1}{P} \quad \cdots \text{Equation 2}$$

Or if S-P=2 is applied to Equation 1, the velocity ratio may be calculated from the following equation:

$$\frac{\omega 2}{\omega 1} = \frac{2}{P} \quad \cdots \text{Equation 3}$$

As the crankshaft rotates at the angular velocity ω1 around the axis of the sun gear, the planet gear rotates at the angular velocity:

$$-\frac{1\omega 1}{P} \text{ or } -\frac{2\omega 1}{P}$$

When P indicates the number of the teeth of the planet gear and the symbol '-' indicates that the rotation of the planet gear is in a reverse direction to that of the crankshaft.
In the CYCLO® GEARMOTOR, illustrated in Fig. F-2, circular teeth (pins) are adapted for the sun gear and epitrochoid curved teeth for the planet gear, thereby avoiding tooth top interference. The rotation of the planet gear around its own axis is taken out through a constant speed internal gearing mechanism as shown in Fig. F-3.
In this mechanism shown in Fig. F-4, the pins of the slow speed shaft are evenly spaced on a circle that is concentric to the axis of the sun gear. The pins transmit the rotation of the planet gear by rolling internally on the circumference of the bores of each planet gear or cycloid disc. The diameter of the bores minus the diameter of the slow speed shaft pins is equal to twice the eccentricity value of the crank shaft (eccentric). This mechanism smoothly transmits only the rotation of the planet gear around its own axis to the slow speed shaft.

Fig.F-1 Principle of Internal Planetary Gearing

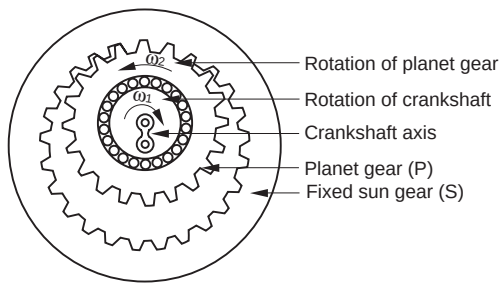

Fig.F-2 Epitrochoid Planet Gear-Circular (PIN) Tooth Sun Gear Combination

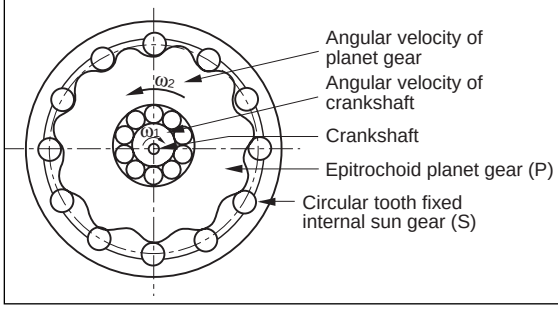

Fig.F-3 Constant Speed Internal Gearing

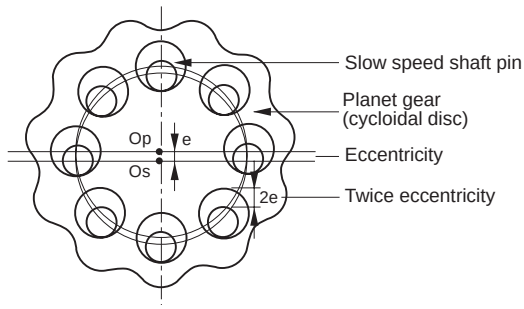

Fig.F-4 Combination of Planet-Sun Gears and Constant Speed Internal Gear

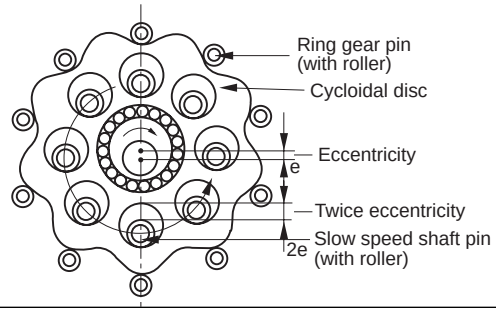

Lubrication

Lubrication Method

1. □ indicates 0, 5, or H (for certain frame size)

(1) Standard Type

Table F-1 Horizontal

a) 6000SK Series Horizontal

Frame Size \ Nominal Reduction Ratio	2.5	3	4	5	6	8	10
607□SK, 608□SK 609□SK, 610□SK 611□SK	Maintenance-Free Type Grease (MF) *Indication necessary for mounting direction.						

b) 6000 Series Single Reduction Horizontal

Frame Size \ Ratio	6	8	11	13	15	17	21	25	29	35	43	51	59	71	87	119
606□	Maintenance-Free Type Grease (MF)										43					
607□													59			
608□															87	
609□, 610□																
611□, 612□																
613□, 614□	Oil Bath (PB)															
616□, 617□																
618□, 619□																
6205, 6215																
6225, 6235																
6245, 6255																
6265																
6275																

c) 6000 Series Double Reduction Horizontal

Frame Size \ Ratio	104	121	143	165	195	231	273	319	377	473	599	649	731	841	1003	1015	1247	1479	1849	2065	2537	3045	3481	4437	5133	6177	7569
606□DA	Maintenance-Free Type Grease (MF)																										
607□DA																					2537						
609□DA, 610□DA																									5133		
612□DA, 612□DB																											
613□DA, 613□DB	Grease (G)																										
613□DC																											
614□DA, 614□DB																											
614□DC																											
616□DA, 616□DB																											
617□DA, 617□DB																											
618□DA																											
616□DC	Oil Bath (PB)																										
617□DC																											
618□DB																											
619□DA, 619□DB																											
6205DA, 6205DB				165																							
6215DA, 6215DB		121																									
6225DA, 6225DB																											
6235DA, 6235DB																											
6245DA, 6245DB																											
6255DA, 6255DB																											
6265DA																											
6275DA									377																		

Note: 1. This table shows the standard lubrication method when the CYCLO® DRIVE is driven at the standard input speed.
2. Grease lubrication is possible for some models with oil lubrication as standards. Consult us in those cases, for performance may vary.
3. □ indicates 0 or 5, expressing the combination with reduction ratio.

Table F-2 Vertical

a) 6000SK Series Vertical

Frame Size \ Nominal Reduction Ratio	2.5	3	4	5	6	8	10
607□SK, 608□SK, 609□SK, 610□SK, 611□SK	Maintenance-Free Type Grease (MF) *Indication necessary for mounting direction.						

b) 6000 Series Single Reduction Vertical

Frame Size \ Ratio	6	8	11	13	15	17	21	25	29	35	43	51	59	71	87	119
606□	Maintenance-Free Type Grease (MF)										43					
607□													59			
608□															87	
609□, 610□																
611□, 612□																
613□, 614□	Oil Bath (PB)															
616□, 617□	Forced Oil Lubrication (P)															
618□, 619□																
6205, 6215																
6225, 6235																
6245, 6255																
6265																
6275									TP		TP		TP		TP	

TP: Postive Displacement Pump Lubrication (See Table F-3)

c) 6000 Series Double Reduction Vertical

Frame Size \ Ratio	104	121	143	165	195	231	273	319	377	473	599	649	731	841	1003	1015	1247	1479	1849	2065	2537	3045	3481	4437	5133	6177	7569
606□DA	Maintenance-Free Type Grease (MF)																										
607□DA																					2537						
609□DA, 610□DA																									5133		
612□DA, 612□DB																											
613□DA, 613□DB	Grease (G)																										
613□DC																											
614□DA, 614□DB																											
614□DC																											
616□DA, 616□DB																											
617□DA, 617□DB																											
618□DA																											
616□DC	Forced Oil Lubrication (P)									473																	
617□DC														841													
618□DB																1015											
619□DA, 619□DB																				2065							
6205DA, 6205DB				165															1849								
6215DA, 6215DB		121																			2537						
6225DA, 6225DB																											
6235DA, 6235DB																											
6245DA, 6245DB																											
6255DA, 6255DB																											
6265DA																											
6275DA									377	Positive Displacement Pump Lubrication (TP) (See Table F-3)																	

Note: 1. This table shows the standard lubrication method when the CYCLO® DRIVE is driven at the standard input speed.
2. Grease lubrication is possible for some models with oil lubrication as standards. Consult us in those cases, for performance may vary.
3. □ indicates 0 or 5, expressing the combination with reduction ratio.

Lubrication

(2) Electric Pump (Electric Pump Type Forced Oil Lubrication Specification)

Table F-3 Electric Pump Specification

Trochoid pump type	TOP216HA-VB3 with release valve (3-phase induction motor: 0.75kW × 4P Type E)	TOP204HB-VB3 with release valve (3-phase induction motor: 0.4kW × 4P Type E)
Frame size/ reduction ratio	6275/29, 43, 59, 87	6275DA

Note: Although the CYCLO® SPEED REDUCER is capable for most uses with lubrication method in Table F-1 and 2, consult us when using in severe conditions, such as with harsh ambient temperature, input speed, or load condition.

2. Lubricant

(1) Grease Lubrication Models

Grease lubrication models in Table F-4 are packed with grease prior to shipment. They may be used without replenishment.

(i) Maintenance-Free Series

· 6000SK Series

Models in Table F-1 (a) and F-2 (a) are sealed with long-life grease (ALVANIA GREASE EPR000). Although replenishment is hardly necessary, replacement every 20,000 hours or 4~5 years will provide longer lifetime.

*Only designated mounting direction possible.

· 6000 Series

Models in section (MF) in Table F-1 (b) & (c) and F-2 (b) & (c) are sealed with long-life grease (ALVANIA GREASE RA). Although replenishment is hardly necessary, replacement every 20,000 hours or 4~5 years will provide longer lifetime.

*Any mounting direction possible.

(ii) Grease Lubrication Models Other than Indicated in Section (i)

Replenish or replace grease following the Instruction Manual.

Table F-4 Standard Grease

Model	Ambient Temperature [°C]	Model/Part		Company	Brand
CYCLO® 6000SK Series	-10 ~ 40	(i) Maintenance-Free Type Grease Lubrication		Nihon Koyu	BEN-10 No.2
CYCLO® 6000 Series	-10 ~ 50	(i) Maintenance-Free Type Grease Lubrication		Nihon Koyu	BEN-10 No.2
		(ii) Models other than (i)		Cosmo Oil	COSMO GREASE DYNAMAX SH No.2
Sumitomo Motor	-10 ~ 50	Sealed Bearings		Kyodo Yushi	MULTEMP SRL
		Open Bearings	Thermal Class: E, B	Exxon Mobil	UNIREX N2
			Thermal Class: F	Shell Oil	DARINA GREASE 2

(iii) Consult us when the unit is stored for more than three years. Grease replacement may be necessary.

Note:
1. Do not use grease other than the ones indicated above.
2. Models (ii) in the Table F-4 are packed with COSMO GREASE DYNAMAX SH No.2 prior to shipment.
3. Grease for models (ii) in Table F-4 may be combined with no problem.
4. Consult us when the unit will be operated in temperatures exceeding 0~40°C.

(2) Oil Lubrication Models

Oil lubrication models are shipped without oil. Always fill with lubrication oil to the top red line on the oil gauge before operation.

Table F-5 Recommended Lubrication Oil (SP Type Industrial Extreme-Pressure Gear Oil) Equivalent to Type 2 Industrial Oil in JIS K2219.

Ambient temperature °C	Gulf Oil	Esso Oil	Mobil Oil	Shell Oil	Caltex Oil	BP Oil
-10~5	EP Lubricant HD 68	Spartan EP 68	Mobil gear 626 (ISO VG 68)	Omala Oil 68		Energol GR-XP 68
0 ~ 35	EP Lubricant HD 100 HD 150	Spartan EP 100 EP 150	Mobil gear 627, 629 (ISO VG 100, 150)	Omala Oil 100, 150	Meropa 100, 150	Energol GR-XP 100 GR-XP 150
30 ~ 50	EP Lubricant HD 220 HD 320 HD 460	Spartan EP 220 EP 320 EP 460	Mobil gear 630, 632 633, 634 (ISO VG 220~460)	Omala Oil 220, 320 460	Meropa 220, 320 460	Energol GR-XP 220 GR-XP 320 GR-XP 460

Note: 1. Use oil with lower viscosity for operation in winter or relatively low ambient temperature, specified in the parenthesis.
2. Consult us for operation in ambient temperatures exceeding 0~40°C.

2. Volume of Oil

Table F-6 Volume of Lubrication Oil, Litres [ℓ] (Approximate)

Single Reduction

Frame Size	613□	614□	616□	617□	618□	619□	6205	6215	6225	6235	6245	6255	6265	6275
Horizontal	0.7	0.7	1.4	1.9	2.5	4.0	5.5	8.5	10	15	16	21	29	56
Vertical	1.1	1.1	1	1.9	2	2.7	5.7	7.5	10	12	15	42	51	(60)

Double Reduction

Frame Size	616□ DC	617□ DC	618□ DB	619□ DA	619□ DB	6205 DA	6205 DB	6215 DA	6215 DB	6225 DA	6225 DB	6235 DA	6235 DB	6245 DA	6245 DB	6255 DA	6255 DB	6265 DA	6275 DA
Horizontal	1.5	2.4	3.5	5.8	6.0	6.0	6	10	10	11	11	17	17	18	18	23	23	32	60
Vertical	1.0	1.9	2.0	2.7	2.7	11	11	14	14	18	18	23	23	29	29	42	42	51	(60)

Note: 1. □ indicates 0, 5, or H (for certain frame size).
2. ( ) with trochoid pump.

3. Cautions on Oil Seals

Oil seal has limited lifetime. Sealing effect may lower by natural degradation or abrasion by prolonged use. Seal life may vary depending on operation condition and ambient condition of the reducer. Oil seal change every 1~3 years is recommended for normal operation (uniform load, 10 hours/day, at normal temperature).

Nameplate

There are two types of nameplates, Type I and Type II. Refer to the relevant example of the typical plates shown below.

1. For Gearmotor

(1) Nameplate Type I: Gearmotor

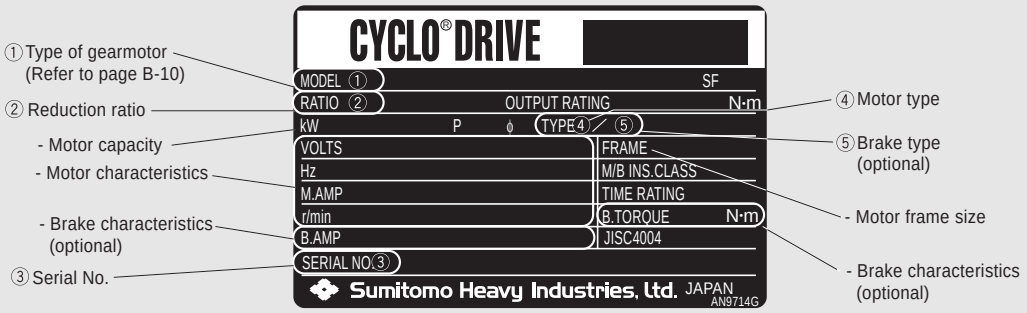

Fig. F-5 Nameplate of Gearmotor (Type I)

(2) Nameplate Type II: Reducer with Motor

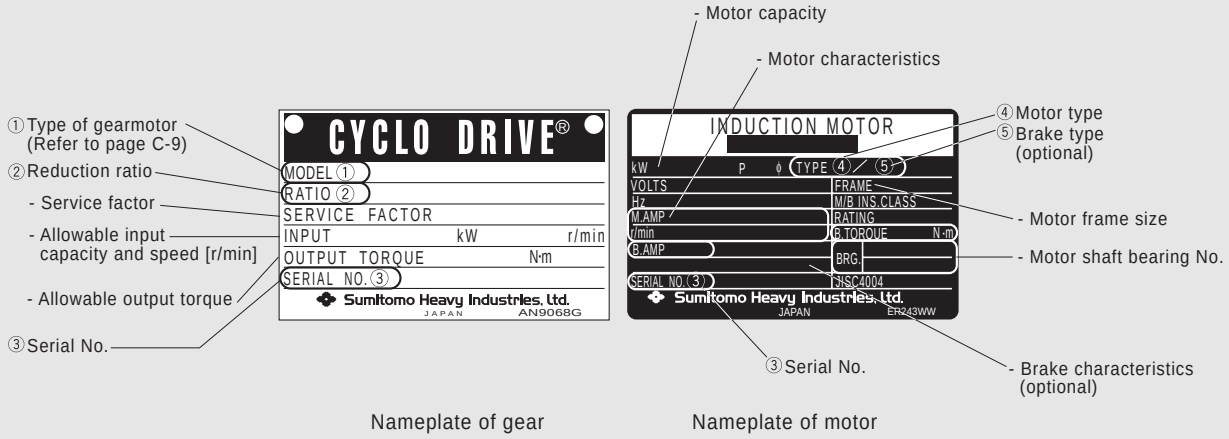

Fig. F-6 Nameplates of Reducer with Motor (Type II)

2. For Reducer

(1) Nameplate Type I

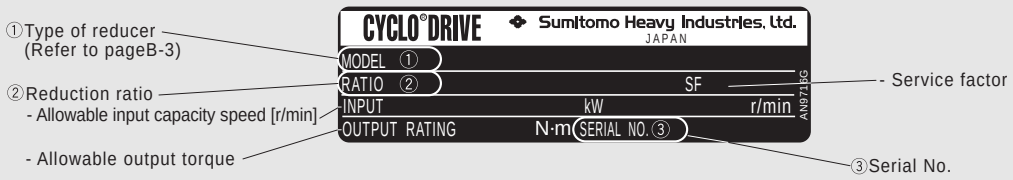

Fig. F-7 Nameplate of Reducer (Type I)

(2) Nameplate Type II

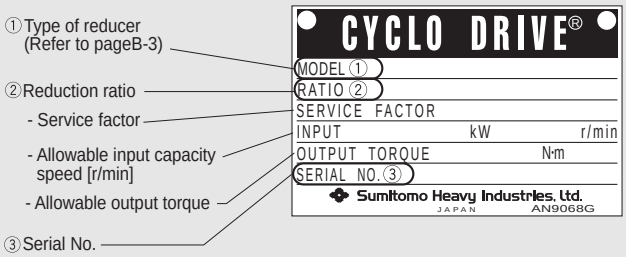

Fig. F-8 Nameplate of Reducer (Type II)

Allowable Radial and Axial Load

Use within the allowable range for the radial and axial load when a gear or a pulley is coupled with CYCLO® reducer.

1. Radial and Axial Load on the Slow Speed Shaft

Confirm the radial axial load on the slow speed shaft using the following formula:

1) Radial load Pr

$$Pr = \frac{T\ell}{R} \leq \frac{Pro}{Lf \cdot Cf \cdot Fs} \quad [N, kgf]$$

2) Axial load Pa

$$Pa \leq \frac{Pao}{Cf \cdot Fs} \quad [N, kgf]$$

3) When radial and axial load co-exist.

$$\left(\frac{Pr \cdot Lf}{Pro} + \frac{Pa}{Pao}\right) \cdot Cf \cdot Fs \leq 1$$

Pr: Actual radial load [N, kgf]
Tℓ: Actual transmitted torque [N·m, kgf·m] on slow speed shaft of the reducer.
R: Pitch circle radius [m] of sprocket, gear, pulley, etc.
Pro: Allowable radial load [N, kgf] (Refer to Selection Table)
Pa: Actual axial load [N, kgf]
Pao: Allowable axial load [N, kgf] (Table E-10, 11)
Lf: Load location factor (Table E-9)
Cf: Coupling factor (Table E-7)
Fs: Shock factor (Table E-8)

- When the radial load exceeds the allowable values, a larger frame size may be selected, but depending upon the extent of the load, this may be avoided by using the heavy radial load type; please refer to Page E-12.
- Consult us when using for application with extremely high startup frequency.

Table E-7 Coupling Factor Cf

Coupling Method	Cf
Chain	1
Gears	1.25
V-Belt	1.5

Table E-8 Shock Factor Fs

Degree of Shock	Fs
Practically no shock	1
Light shock	1~1.2
Severe shock	1.4~1.6

Calculate detailed intermediate values in Tables E-9~E-11 according to the interpolation method.

Calculation Example by Interpolation Method

Load Location Factor

Frame size 6075 Load Location Factor for L=18mm is calculated below.

$$1.00 + \frac{1.29-1.00}{20-15} \times (18-15) = 1.17$$

Thrust Load Capacity

Frame size 6180 Thrust Load Capacity for output speed 130r/min is calculated bellow.

$$12500 + \frac{13100-12500}{150-125} \times (150-130) = 12980 \text{ [N]}$$

Allowable Radial and Axial Load

Table F-9 Load Location Factor (Slow Speed Shaft) Lf

Frame Size		Load Location L [mm]																							
Single Reduction	Double Reduction	~5	10	15	20	25	30	35	40	45	50	60	70	80	90	100	120	140	160	180	200	225	250	275	300
607□SK	-	0.83	0.92	1.00	1.08	1.17	1.25	-	-	-	-	-	-	-	-	-	-	-	-	-					-
608□SK	-	0.83	0.90	0.97	1.03	1.10	1.17	1.24	-	-	-	-	-	-	-	-	-	-	-	-					-
609□SK	-	0.87	0.92	0.97	1.03	1.08	1.13	1.19	-	-	-	-	-	-	-	-	-	-	-	-					-
610□SK	-	0.87	0.92	0.97	1.03	1.08	1.13	1.19	-	-	-	-	-	-	-	-	-	-	-	-					-
611□SK	-	0.83	0.88	0.93	0.98	1.02	1.07	1.12	1.17	1.22	-	-	-	-	-	-	-	-	-	-					-
606□	606□DA	0.83	0.94	1.19	1.56	-	-	-	-	-	-	-	-	-	-	-	-	-	-	-					-
607□	607□DA	0.82	0.91	1.00	1.29	1.59	1.88	-	-	-	-	-	-	-	-	-	-	-	-	-					-
608□	-	0.81	0.87	0.94	1.03	1.28	1.54	1.80	-	-	-	-	-	-	-	-	-	-	-	-					-
609□	609□DA	0.86	0.92	0.97	1.13	1.38	1.64	1.90	-	-	-	-	-	-	-	-	-	-	-	-					-
610□	610□DA	0.86	0.92	0.97	1.13	1.38	1.64	1.90	-	-	-	-	-	-	-	-	-	-	-	-					-
611□	-	0.78	0.84	0.90	0.96	1.02	1.08	1.19	1.36	1.53	-	-	-	-	-	-	-	-	-	-					-
612□	612□DA 612□DB	-	0.82	0.87	0.92	0.97	1.08	1.25	1.42	1.59	1.76	-	-	-	-	-	-	-	-	-					-
613□	613□DA 613□DB 613□DC	-	-	0.83	0.87	0.92	0.96	1.00	1.13	1.25	1.38	1.63	1.88	-	-	-	-	-	-	-	-	-	-	-	-
614□	614□DA 614□DB 614□DC	-	-	-	0.66	0.73	0.80	0.87	0.93	1.00	1.10	1.30	1.50	1.70	1.90	-	-	-	-	-	-	-	-	-	-
616□	616□DA 616□DB 616□DC	-	-	-	0.83	0.87	0.90	0.93	0.97	1.00	1.11	1.32	1.53	1.75	1.96	-	-	-	-	-	-	-	-	-	-
617□	617□DA 617□DB 617□DC	-	-	-	0.86	0.89	0.92	0.94	0.97	1.00	1.11	1.32	1.53	1.75	1.96	-	-	-	-	-	-	-	-	-	-
618□	618□DA 618□DB	-	-	-	-	0.85	0.87	0.90	0.93	0.95	0.98	1.09	1.26	1.43	1.60	1.78	-	-	-	-	-	-	-	-	-
619□	619□DA 619□DB	-	-	-	-	-	0.85	0.87	0.89	0.91	0.93	0.97	1.04	1.18	1.32	1.46	1.75	-	-	-	-	-	-	-	-
6205	6205DA 6205DB	-	-	-	-	-	-	-	0.70	0.74	0.77	0.84	0.91	0.98	1.05	1.12	1.26	1.40	1.54	-	-	-	-	-	-
6215	6215DA 6215DB	-	-	-	-	-	-	-	0.70	0.73	0.77	0.84	0.91	0.98	1.05	1.13	1.27	1.41	1.56	-	-	-	-	-	-
6225	6225DA 6225DB	-	-	-	-	-	-	-	0.86	0.88	0.90	0.93	0.96	0.99	1.02	1.06	1.12	1.19	1.25	-	-	-	-	-	-
6235	6235DA 6235DB	-	-	-	-	-	-	-	0.82	0.84	0.85	0.88	0.91	0.94	0.97	1.00	1.06	1.12	1.18	1.24	1.30	-	-	-	- -
6245	6245DA 6245DB	-	-	-	-	-	-	-	0.83	0.84	0.86	0.89	0.92	0.94	0.97	1.00	1.06	1.11	1.17	1.23	1.29	-	-	-	-
6255	6255DA 6255DB	-	-	-	-	-	-	-	-	-	0.83	0.85	0.88	0.90	0.93	0.95	1.00	1.05	1.10	1.22	1.36	1.52	1.69	-	-
6265	6265DA	-	-	-	-	-	-	-	-	-	-	-	0.83	0.85	0.88	0.90	0.94	0.98	1.04	1.17	1.29	1.45	1.61	1.77	1.93
6275	6275DA	-	-	-	-	-	-	-	-	-	-	-	-	0.67	0.71	0.75	0.82	0.90	0.98	1.09	1.21	1.35	1.50	1.65	1.79
Single Reduction	Double Reduction	~5	10	15	20	25	30	35	40	45	50	60	70	80	90	100	120	140	160	180	200	225	250	275	300
Frame Size		Load Location L [mm]																							

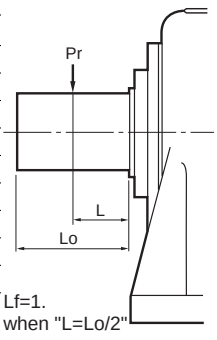

Note: □ indicates 0 or 5, expressing combination with reduction ratio.

Allowable Radial and Axial Load

Table F-10 Axial Load Capacity (Slow Speed Shaft) Pao (Upper Row: N, Lower Row: kgf)

(When Cf, Lf, Fs=1)

Frame Size		Output Speed [r/min]																
Single Reduction	Double Reduction	~10	15	20	25	30	35	40	50	60	80	100	125	150	200	250	300	~700
607□SK	-	785	785	785	785	785	785	785	785	785	785	785	785	785	785	785	785	785
		80	80	80	80	80	80	80	80	80	80	80	80	80	80	80	80	80
608□SK	-	981	981	981	981	981	981	981	981	981	981	981	981	981	981	981	981	981
		100	100	100	100	100	100	100	100	100	100	100	100	100	100	100	100	100
609□SK	-	981	981	981	981	981	981	981	981	981	981	981	981	981	981	981	981	981
		100	100	100	100	100	100	100	100	100	100	100	100	100	100	100	100	100
610□SK	-	1470	1470	1470	1470	1470	1470	1470	1470	1470	1470	1470	1470	1470	1470	1470	1470	1470
		150	150	150	150	150	150	150	150	150	150	150	150	150	150	150	150	150
611□SK	-	1470	1470	1470	1470	1470	1470	1470	1470	1470	1470	1470	1470	1470	1470	1470	1470	1470
		150	150	150	150	150	150	150	150	150	150	150	150	150	150	150	150	150
606□	606□DA	294	294	294	294	294	294	294	294	294	294	294	294	294	294	-	-	
		30	30	30	30	30	30	30	30	30	30	30	30	30	30	-	-	
607□	607□DA	785	785	785	785	785	785	785	785	785	785	785	785	785	785	785	785	
		80	80	80	80	80	80	80	80	80	80	80	80	80	80	80	80	
608□	-	981	981	981	981	981	981	981	981	981	981	981	981	981	981	981	981	
		100	100	100	100	100	100	100	100	100	100	100	100	100	100	100	100	
609□	609□DA	981	981	981	981	981	981	981	981	981	981	981	981	981	981	981	981	
		100	100	100	100	100	100	100	100	100	100	100	100	100	100	100	100	
610□	610□DA	1470	1470	1470	1470	1470	1470	1470	1470	1470	1470	1470	1470	1470	1470	1470	1470	
		150	150	150	150	150	150	150	150	150	150	150	150	150	150	150	150	
611□	-	1470	1470	1470	1470	1470	1470	1470	1470	1470	1470	1470	1470	1470	1470	1470	1470	
		150	150	150	150	150	150	150	150	150	150	150	150	150	150	150	150	
612□	612□DA	2940	2940	2940	2940	2940	2940	2940	2940	2940	2940	2940	2940	2940	2770	2500	2390	
	612□DB	300	300	300	300	300	300	300	300	300	300	300	300	300	282	255	244	
613□	613□DA 613□DB 613□DC	3920	3920	3920	3920	3920	3920	3920	3920	3920	3920	3920	3920	3920	3920	3920	3920	
		400	400	400	400	400	400	400	400	400	400	400	400	400	400	400	400	
614□	614□DA 614□DB 614□DC	5400	5400	5400	5400	5400	5400	5400	5400	5400	5230	4860	4560	4370	3850	3670	3450	
		550	550	550	550	550	550	550	550	550	533	495	465	445	392	374	352	
616□	616□DA 616□DB 616□DC	6870	6870	6870	6870	6870	6870	6870	6870	6870	6870	6870	6870	6870	6300	5700	-	
		700	700	700	700	700	700	700	700	700	700	700	700	700	642	581	-	
617□	617□DA 617□DB 617□DC	9810	9810	9810	9810	9810	9810	9810	9810	9810	9810	9810	9680	9020	8090	7330	6880	
		1000	1000	1000	1000	1000	1000	1000	1000	1000	1000	1000	987	919	825	747	701	
618□	618□DA	13700	13700	13700	13700	13700	13700	13700	13700	13700	13700	13700	13100	12500	11000	-	-	
	618□DB	1400	1400	1400	1400	1400	1400	1400	1400	1400	1400	1400	1340	1270	1120	-	-	
619□	619□DA	19600	19600	19600	19600	19600	19600	19600	19600	19600	19600	19600	18500	17500	15400	-	-	
	619□DB	2000	2000	2000	2000	2000	2000	2000	2000	2000	2000	2000	1890	1780	1570	-	-	
6205	6205DA	26500	23500	21100	19600	18600	18100	17700	16700	15700	14200	13200	12800	12300	11300	-	-	
	6205DB	2700	2400	2150	2000	1900	1850	1800	1700	1600	1450	1350	1300	1250	1150	-	-	
6215	6215DA	27500	24500	22100	20600	19600	18600	18100	17200	16200	14700	13700	13200	12800	11800	-	-	
	6215DB	2800	2500	2250	2100	2000	1900	1850	1750	1650	1500	1400	1350	1300	1200	-	-	
6225	6225DA	29400	25600	23200	21700	20600	19600	18700	17600	16700	15300	14400	13600	13100	12100	-	-	
	6225DB	3000	2610	2360	2210	2100	2000	1910	1790	1700	1560	1470	1390	1340	1230	-	-	
6235	6235DA	35300	31400	28400	26500	25000	23500	22600	21100	20100	18600	17700	16700	-	-	-	-	
	6235DB	3600	3200	2900	2700	2550	2400	2300	2150	2050	1900	1800	1700	-	-	-	-	
6245	6245DA	37300	33800	30900	28800	27300	26100	25100	23500	22300	21000	19900	19100	-	-	-	-	
	6245DB	3800	3450	3150	2940	2780	2660	2560	2400	2270	2140	2030	1950	-	-	-	-	
6255	6255DA	48100	43100	39400	36900	35100	33600	32300	30400	28500	26800	25500	24200	-	-	-	-	
	6255DB	4900	4390	4020	3760	3580	3430	3290	3100	2910	2730	2600	2470	-	-	-	-	
6265	6265DA	52000	52000	51000	47500	44800	42800	41600	38900	37300	34800	33000	31100	-	-	-	-	
		5300	5300	5200	4840	4570	4360	4240	3970	3800	3550	3360	3170	-	-	-	-	
6275	6275DA	58900	58900	58900	58900	58900	58900	58900	58900	-	-	-	-	-	-	-	-	
		6000	6000	6000	6000	6000	6000	6000	6000	-	-	-	-	-	-	-	-	
Single Reduction	Double Reduction	~10	15	20	25	30	35	40	50	60	80	100	125	150	200	250	300	
Frame Size		Output Speed [r/min]																

Note: □ indicates 0 or 5, expressing combination with reduction ratio.

Allowable Radial and Axial Load

2. High Capacity Bearing Type (Iron/Ductile Iron) (Optional Items)

When the radial load of the slow speed shaft exceeds the allowable value of the standard CYCLO® reducer, a larger frame size may be selected, but depending upon the degree of the load, this may be avoided by using the heavy radial load type. Refer to Table F-9~10 for allowable radial load on the slow speed shaft of the heavy radial load type.

Precautions for Selection and Use

1. High capacity bearing is indicated with the suffix "R1" or "R2" after the frame size.
   Example: CHHM5-6135-R2-B-29
2. □ indicates 0, 5, or H.
3. Consult us for the following conditions, which require special considerations:
   - When the shaft direction is vertical (Vertical type).
   - When thrust load is simultaneously exerted on the slow speed shaft.
4. Use JIS B1051 erection bolts, with strength in exceeding 8.8.

Table F-11 Allowable Radial Load Pro (Upper: N, Lower: kgf, Max) on the Slow Speed Shaft of the High Capacity Bearing (R1)

(When Cf, Lf, Fs=1)

Frame Size		Output Speed [r/min]											
Single Reduction	Double Reduction	~1	2	3	4	5	6	8	10	15	20	25	30
613□	613□DA	14700	14700	14700	14700	14700	14700	14700	14700	14700	14700	14700	14700
	613□DB	1500	1500	1500	1500	1500	1500	1500	1500	1500	1500	1500	1500
	613□DC												
616□	616□DA	22100	22100	22100	22100	22100	22100	22100	22100	22100	22100	22100	22100
	616□DB	2250	2250	2250	2250	2250	2250	2250	2250	2250	2250	2250	2250
	616□DC												
617□	617□DA	29500	29500	29500	29500	29500	29500	29500	29500	29500	29500	29500	29500
	617□DB	3010	3010	3010	3010	3010	3010	3010	3010	3010	3010	3010	3010
	617□DC												
618□	618□DA	41700	41700	41700	41700	41700	41700	41700	41700	41700	41700	41700	41700
	618□DB	4250	4250	4250	4250	4250	4250	4250	4250	4250	4250	4250	4250
619□	619□DA	59000	59000	59000	59000	59000	59000	59000	59000	59000	59000	59000	59000
	619□DB	6010	6010	6010	6010	6010	6010	6010	6010	6010	6010	6010	6010

Frame Size		Output Speed [r/min]										
Single Reduction	Double Reduction	35	40	50	60	80	100	125	150	200	250	300
613□	613□DA	14700	14700	14700	14700	14100	13500	12600	11900	10900	10200	9660
	613□DB	1500	1500	1500	1500	1440	1380	1280	1210	1110	1040	985
	613□DC											
616□	616□DA	22100	22100	22100	22100	22100	21600	20100	19000	17500	16300	15400
	616□DB	2250	2250	2250	2250	2250	2200	2050	1940	1780	1660	1570
	616□DC											
617□	617□DA	29500	29500	29500	29500	29500	29300	27400	25900	23800	22200	21100
	617□DB	3010	3010	3010	3010	3010	2990	2790	2640	2430	2260	2150
	617□DC											
618□	618□DA	41700	41700	41700	41700	41300	38600	36200	34200	31400	-	-
	618□DB	4250	4250	4250	4250	4210	3930	3690	3490	3200	-	-
619□	619□DA	59000	59000	55200	53000	47200	44000	41000	38300	34700	-	-
	619□DB	6010	6010	5630	5400	4810	4490	4180	3900	3540	-	-

Note: □ indicates 0 or 5, expressing combination with reduction ratio.

Allowable Radial and Axial Load

Table F-12 Allowable Radial Load Pro (Upper: N, Lower: kgf, Max) on the Slow Speed Shaft of High Capacity Bearing with Ductile Iron (R2)

(Cf, Lf, Fs=1)

Frame Size		Output Speed [r/min]											
Single Reduction	Double Reduction	~1	2	3	4	5	6	8	10	15	20	25	30
613□	613□DA	24000	24000	24000	24000	24000	24000	24000	24000	23800	21800	20400	19300
	613□DB	2450	2450	2450	2450	2450	2450	2450	2450	2430	2220	2080	1970
	613□DC												
616□	616□DA	33600	33600	33600	33600	33600	33600	33600	33600	33600	33600	33300	31500
	616□DB	3430	3430	3430	3430	3430	3430	3430	3430	3430	3430	3390	3210
	616□DC												
617□	617□DA	45900	45900	45900	45900	45900	45900	45900	45900	45900	45900	45300	42900
	617□DB	4680	4680	4680	4680	4680	4680	4680	4680	4680	4680	4620	4370
	617□DC												
618□	618□DA	55700	55700	55700	55700	55700	55700	55700	55700	55700	55700	55700	55700
	618□DB	5680	5680	5680	5680	5680	5680	5680	5680	5680	5680	5680	5680
619□	619□DA	71800	71800	71800	71800	71800	71800	71800	71800	71800	71800	71800	69300
	619□DB	7320	7320	7320	7320	7320	7320	7320	7320	7320	7320	7320	7060
6205	6205DA	97800	97800	97800	97800	97800	97800	97800	97800	89100	81800	76500	72400
	6205DB	9970	9970	9970	9970	9970	9970	9970	9970	9080	8340	7800	7380
6215	6215DA	132000	132000	132000	132000	126000	119000	109000	102000	90500	83000	77600	73500
	6215DB	13500	13500	13500	13500	12800	12100	11100	10400	9230	8460	7910	7490
6225	6225DA	161000	161000	161000	161000	156000	148000	135000	126000	112000	103000	96300	91100
	6225DB	16400	16400	16400	16400	15900	15100	13800	12800	11400	10500	9820	9290
6235	6235DA	183000	183000	183000	183000	183000	183000	170000	159000	141000	129000	121000	114000
	6235DB	18700	18700	18700	18700	18700	18700	17300	16200	14400	13100	12300	11600
6245	6245DA	223000	223000	223000	223000	209000	198000	181000	169000	150000	138000	129000	122000
	6245DB	22700	22700	22700	22700	21300	20200	18500	17200	15300	14100	13100	12400
6255	6255DA	274000	274000	274000	274000	258000	244000	224000	210000	185000	170000	159000	151000
	6255DB	27900	27900	27900	27900	26300	24900	22800	21400	18900	17300	16200	15400
6265	6265DA	283000	283000	283000	283000	283000	283000	270000	253000	224000	205000	191000	181000
		28800	28800	28800	28800	28800	28800	27500	25800	22800	20900	19500	18500
6275	6275DA	272000	272000	272000	272000	272000	272000	272000	272000	272000	272000	272000	272000
		27700	27700	27700	27700	27700	27700	27700	27700	27700	27700	27700	27700

Frame Size		Output Speed [r/min]										
Single Reduction	Double Reduction	35	40	50	60	80	100	125	150	200	250	300
613□	613□DA	18400	17800	16500	15600	14400	13500	12600	11900	10900	10200	9660
	613□DB	1880	1810	1680	1590	1470	1380	1280	1210	1110	1040	985
	613□DC											
616□	616□DA	30100	28900	27000	25600	23500	22000	20500	19400	17900	16600	15400
	616□DB	3070	2950	2750	2610	2400	2240	2090	1980	1820	1690	1570
	616□DC											
617□	617□DA	40900	39300	36800	34800	31900	29900	27900	26400	24300	22200	21100
	617□DB	4170	4010	3750	3550	3250	3050	2840	2690	2480	2260	2150
	617□DC											
618□	618□DA	54000	51900	48500	45900	42100	39400	36900	34900	32000	-	-
	618□DB	5500	5290	4940	4680	4290	4020	3760	3560	3260	-	-
619□	619□DA	66100	63500	59400	56300	51600	48300	45100	42800	39300	-	-
	619□DB	6740	6470	6060	5740	5260	4920	4600	4360	4010	-	-
6205	6205DA	69100	66400	62100	58800	54000	50500	47100	44600	41000	-	-
	6205DB	7040	6770	6330	5990	5500	5150	4800	4550	4180	-	-
6215	6215DA	70100	67400	63000	59600	54800	51300	47900	45400	41600	-	-
	6215DB	7150	6870	6420	6080	5590	5230	4880	4630	4240	-	-
6225	6225DA	87000	83500	78100	74000	67900	63500	59400	56300	51500	-	-
	6225DB	8870	8510	7960	7540	6920	6470	6060	5740	5250	-	-
6235	6235DA	109000	105000	98100	92900	85300	79800	74500	-	-	-	-
	6235DB	11100	10700	10000	9470	8700	8130	7590	-	-	-	-
6245	6245DA	116000	112000	105000	98900	90800	84900	79400	-	-	-	-
	6245DB	11800	11400	10700	10100	9260	8650	8090	-	-	-	-
6255	6255DA	144000	139000	129000	123000	112000	105000	98300	-	-	-	-
	6255DB	14700	14200	13100	12500	11400	10700	10000	-	-	-	-
6265	6265DA	174000	166000	156000	148000	135000	126000	118000	-	-	-	-
		17700	16900	15900	15100	13800	12800	12000	-	-	-	-
6275	6275DA	-	-	-	-	-	-	-	-	-	-	-
		-	-	-	-	-	-	-	-	-	-	-

Note: □ indicates 0 or 5, expressing combination with reduction ratio.

Allowable Radial and Axial Load

Confirm the radial load on the high speed shaft, following the formula below:

$$Pr \leq \frac{Pro}{Lf \cdot Cf \cdot Fs} \text{ [N, kgf]}$$

Pr: Actual radial load [N, kgf]
Pro: Allowable radial load [N, kgf]
Lf: Load location factor (Table F-11)
Cf: Coupling factor (Table F-5)
Fs: Shock factor (Table F-6)

Table F-13 Radial Load Location Factor (High Speed Shaft) Lf

Frame Size		Load Location L [mm]																			
Single Reduction	Double Reduction	5	10	15	20	25	30	35	40	45	50	60	70	80	90	100	120	140	160	180	200
607□SK	-	0.72	0.91	1.09	1.28	1.46	-	-	-	-	-	-	-	-	-	-	-	-	-	-	-
608□SK	-	0.90	0.97	1.03	1.10	1.16	-	-	-	-	-	-	-	-	-	-					-
609□SK	-	0.90	0.97	1.03	1.10	1.16	-	-	-	-	-	-	-	-	-	-					-
610□SK	-	0.75	0.92	1.08	1.25	1.42	-	-	-	-	-	-	-	-	-	-					-
611□SK	-	0.87	0.92	0.97	1.03	1.08	1.13	1.18	-	-	-	-	-	-	-	-					-
606□	606□DA, 607□DA	0.73	0.91	1.20	1.60	2.00	-	-	-	-	-	-	-	-	-	-					-
607□	609□DA, 610□DA, 612□DA 613□DA, 614□DA	0.73	0.91	1.20	1.60	2.00	-	-	-	-	-	-	-	-	-	-					-
608□	-	0.73	0.91	1.20	1.60	2.00	-	-	-	-	-	-	-	-	-	-					-
609□	612□DB, 613□DB, 614□DB 616□DA, 617□DA	0.88	0.96	1.20	1.59	2.00	2.38	-	-	-	-	-	-	-	-	-					-
610□	613□DC, 614□DC, 616□DB 617□DB, 618□DA	0.91	0.97	1.20	1.59	2.00	2.38	-	-	-	-	-	-	-	-	-					-
611□	-	0.91	0.97	1.20	1.59	2.00	2.38	-	-	-	-	-	-	-	-	-					-
612□	616□DC, 617□DC 619□DA, 6205DA	-	0.81	0.93	1.14	1.41	1.67	1.96	2.22	-	-	-	-	-	-	-	-	-	-	-	-
613□	618□DB, 619□DB, 6205DB 6215DA, 6225DA	-	0.78	0.89	1.00	1.23	1.45	1.69	1.92	2.13	-	-	-	-	-	-	-	-	-	-	-
614□	-	-	0.78	0.89	1.00	1.23	1.45	1.69	1.92	2.13	-	-	-	-	-	-	-	-	-	-	-
616□	6215DB, 6235DA, 6245DA	-	0.92	0.95	0.98	1.05	1.18	1.28	1.41	1.52	1.64	1.85	-	-	-	-	-	-	-	-	-
617□	6225DA, 6255DB	-	-	0.93	0.96	0.99	1.05	1.16	1.28	1.39	1.49	1.72	1.92	2.17	-	-	-	-	-	-	-
618□	6235DB, 6245DB	-	-	-	0.93	0.96	0.99	1.05	1.15	1.25	1.35	1.56	1.75	1.96	2.17	-	-	-	-	-	-
619□	6255DB, 6265DA, 6275DA	-	-	-	0.93	0.95	0.98	1.00	1.09	1.16	1.25	1.41	1.59	1.75	1.92	2.08	-	-	-	-	-
6205	-	-	-	-	-	0.93	0.95	0.97	1.00	1.04	1.10	1.22	1.33	1.45	1.56	1.68	1.91	-	-	-	-
6215	-	-	-	-	-	0.93	0.95	0.98	1.00	1.03	1.08	1.19	1.29	1.40	1.51	1.61	1.82	-	-	-	-
6225	-	-	-	-	-	0.94	0.96	0.98	1.00	1.02	1.04	1.08	1.14	1.24	1.33	1.42	1.60	-	-	-	-
6235	-	-	-	-	-	0.84	0.86	0.87	0.89	0.93	0.98	1.07	1.16	1.25	1.34	1.44	1.62	-	-	-	-
6245	-	-	-	-	-	0.91	0.92	0.94	0.96	0.98	0.99	1.07	1.15	1.24	1.33	1.42	1.59	-	-	-	-
6255	-	-	-	-	-	-	-	0.92	0.93	0.94	0.96	0.99	1.03	1.09	1.16	1.22	1.34	1.47	1.60	1.72	-
6265	-	-	-	-	-	-	-	0.92	0.93	0.94	0.96	0.99	1.03	1.09	1.16	1.22	1.34	1.47	1.60	1.72	-
6275	-	-	-	-	-	-	-	-	-	0.93	0.94	0.97	0.99	1.04	1.14	1.22	1.39	1.56	1.72	1.92	2.08
Single Reduction	Double Reduction	5	10	15	20	25	30	35	40	45	50	60	70	80	90	100	120	140	160	180	200
Frame Size		Load Location L [mm]																			

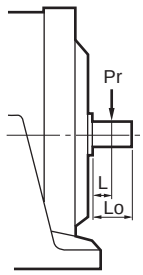

Lf=1
when "L=Lo/2"

Note: □ indicates 0 or 5, expressing combination with reduction ratio.

Allowable Radial and Axial Load

Table F-14 Radial Load Capacity (High Speed Shaft) Pro (Upper row: N, Lower row: kgf)

(When Cf, Lf, Fs=1)

Frame Size		Reduction Ratio (Double Reduction: Input side)	Input Speed [r/min]						
Single Reduction	Double Reduction		1750	1450	1165	980	870	720	580
607□SK	-	2.5 - 10	196 20	147 15	147 15	196 20	196 20	196 20	196 20
608□SK	-	2.5 - 10	196 20	147 15	147 15	196 20	196 20	196 20	196 20
609□SK	-	2.5 - 10	294 30	294 30	294 30	294 30	294 30	294 30	294 30
610□SK	-	2.5 - 10	441 45	441 45	491 50	540 55	589 60	589 60	589 60
611□SK	-	2.5 - 10	441 45	343 35	441 45	491 50	491 50	540 55	589 60
606□	606□DA, 607□DA	6 - 17, 25 - 35	196 20	147 15	147 15	196 20	196 20	196 20	196 20
		21, 43	196 8	147 3	147 5	196 5	196 5	196 5	196 5
607□	609□DA, 610□DA, 612□DA 613□DA, 614□DA	6 - 17, 25 - 35, 51, 59	196 20	147 15	147 15	196 20	196 20	196 20	196 20
		21, 43	49.1 5	49.1 5	49.1 5	49.1 5	49.1 5	147 15	196 20
608□	-	6 - 15, 21 - 29, 43 - 59, 87	196 20	147 15	147 15	196 20	196 20	196 20	196 20
		17, 35, 71	49.1 5	49.1 5	49.1 5	49.1 5	49.1 5	147 15	196 20
609□	612□DB, 613□DB, 614□DB 616□DA, 617□DA	6 - 17, 25 - 71, 119	294 30	294 30	294 30	294 30	294 30	294 30	294 30
		21, 87	196 20	196 20	196 20	196 20	245 25	245 25	294 30
610□	613□DC, 614□DC, 616□DB 617□DB, 618VDA	6 - 11, 17 - 119	441 45	441 45	491 50	540 55	589 60	589 60	589 60
		13, 15	441 45	343 35	441 45	491 50	491 50	540 55	589 60
611□	-	6, 8, 21 - 87	441 45	343 35	441 45	491 50	491 50	540 55	589 60
		11 - 17	196 20	196 20	196 20	196 20	245 25	245 25	294 30
612□	616□DC, 617□DC 619□DA, 6205DA	6 - 17	590 60	690 70	740 75	780 80	880 90	880 90	880 90
		21 - 87	540 55	440 45	490 50	540 55	590 60	880 90	880 90
613□	618□DB, 619□DB, 6205DB 6215DA, 6225DA	6 - 17, 21	1370 140	1370 140	1370 140	1520 155	1620 165	1720 175	1860 190
		25 - 87	1280 130	1280 130	1280 130	1370 140	1470 150	1570 160	1770 180
614□	-	6, 8	1370 140	1370 140	1370 140	1520 155	1620 165	1720 175	1860 190
		11 - 21	1230 125	980 100	1080 110	1180 120	1230 125	1320 135	1470 150
		25	1080 110	1130 115	1180 120	1280 130	1320 135	1370 140	1470 150
		29 - 87	540 55	590 60	590 60	690 70	690 70	690 70	1080 110
616□	6215DB, 6235DA, 6245DA	8 - 25, 51, 59	1770 180	1770 180	1960 200	2060 210	2160 220	2160 220	2160 220
		29 - 43, 71, 87	1080 110	1180 120	1280 130	1370 140	1370 140	1570 160	1770 180
617□	6225DA, 6255DB	11 - 87	2060 210	2060 210	2260 230	2260 230	2350 240	2450 250	2650 270
618□	6235DB, 6245DB	11 - 87	2750 280	2550 260	2750 280	2940 300	3040 310	3340 340	3430 350
619□	6255DB, 6265DA, 6275DA	11 - 25	3040 310	3040 310	3240 330	3530 360	3630 370	3920 400	3920 400
		29 - 87	2650 270	2550 260	2840 290	2940 300	3140 320	3340 340	3630 370
6205	-	11 - 87	5400 550	4910 501	5400 550	5890 600	6080 620	6230 635	6180 630
6215	-	11 - 87	5740 585	5100 520	5440 555	6130 625	6330 645	6820 695	7260 740
6225	-	11 - 87	6620 675	5790 590	5980 610	6130 625	6620 675	6970 710	7500 765
6235	-	11 - 87	- -	- -	10000 1020	9520 970	9170 935	8980 915	8730 890
6245	-	11 - 87	- -	- -	11100 1130	10100 1030	10100 1030	10600 1080	11200 1140
6255	-	11 - 87	- -	- -	11800 1200	10800 1100	11300 1150	12300 1250	13100 1340
6265	-	11 - 87	- -	- -	11800 1200	10800 1100	11300 1150	12300 1250	13100 1340
6275	-	29 - 87	- -	- -	14700 1500	14700 1500	14700 1500	14700 1500	14700 1500
Single Reduction	Double Reduction	Reduction Ratio (Double Reduction: Input side)	1750	1450	1165	980	870	720	580
Frame Size			Input Speed [r/min]						

Note: □ indicates 0 or 5, expressing combination with reduction ratio.

Introduction to Moment of Inertia · GD^2

1. Starting Time Moment of Inertia

For successful starting of a driven machine, the starting torque must be adequately larger than the load torque and even after start operation, the motor torque must consistently be greater than the load torque, until reaching full load speed.
The difference between the motor torque and the load torque-during the starting period is referred to as the accelerating torque. If the average accelerating torque is taken as $\overline{T}a$ [N·m, kgf·m], the starting time ts [s] up to the rotating speed n [r/min], is calculated according to the following formula:

$$ts = \frac{(J_M+J_C+J_L)\cdot n}{9.55\cdot \overline{T}a} \quad [S]$$

$$ts = \frac{(GD_M^2+GD_C^2+GD_L^2)\cdot n}{375\cdot \overline{T}a} \quad [S]$$

J_M: Motor moment of inertia (Including brake drum)
J_C: CYCLO® reducer moment of Inertia
J_L: Driven machine moment of Inertia (Including coupling and pulley) when converted to the motor shaft.
GD_M^2: GD^2 of motor (Including brake drum)
GD_C^2: GD^2 of CYCLO® reducer
GD_L^2: GD^2 of driven machine (Including coupling and pulley) when converted to the motor shaft.

Average Accelerating Torque $\overline{T}a$

Average accelerating torque refers to the average value of the difference between the motor torque and the load torque or the actual torque for accelerating the load, as shown in the right graph. For determining the starting time, the motor torque curve and load torque curve are necessary. However, since it is extremely difficult to determine the average accelerating torque by this method, the average accelerating torque at the actual load time is calculated according to the following formula:
When starting at full voltage, the rough average accelerating torque Ta [N·m kgf·m] may be calculated by the following formula:

$$\overline{T}a \div 0.8 \left(\frac{Ts+Tm}{2}\right) - \overline{T}_L \text{ [N·m, kgf·m]}$$

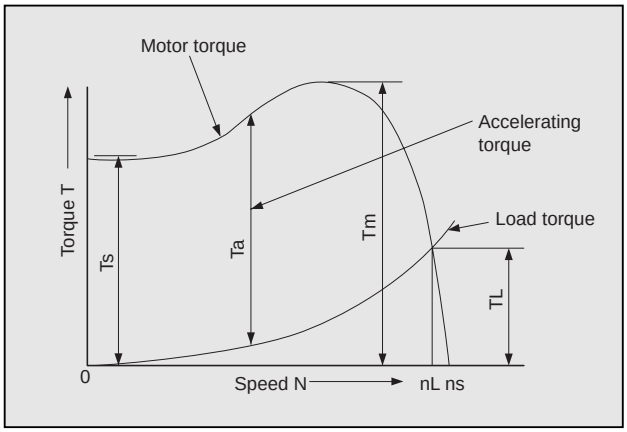

Fig F-9 Torque Curve

Ts: Starting torque
Tm: Maximum torque (Stalling torque)
Ta: Accelerating torque
TL: Full load torque
ns: Synchronous rotating speed
nL: Full load rotating speed

Furthermore, if the average load torque $\overline{T}_L$ [N·m, kgf·m] during the starting period is equivalent to the full load torque, rough $\overline{T}_L$ [N·m, kgf·m] of the motor may be close to the following:

In case of constant torque load $\overline{T}_L \div T_L$ [N·m, kgf·m]
In case of square of reduced torque load $\overline{T}_L \div 0.34T_L$[N·m, kgf·m]

Introduction to Moment of Inertia · GD²

2. Calculation of Moment of Inertia

(1) Moment of Inertia of Rotating Motion

Rotating motion on the center of gravity		Rotating motion off the center of gravity	
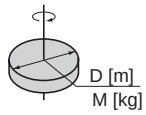	$J=\frac{1}{8}MD^2$ [kg·m²]	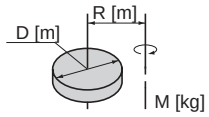	$J=\frac{M}{4}\left(\frac{1}{2}D^2+4R^2\right)$ [kg·m²]
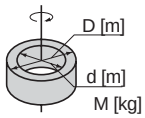	$J=\frac{1}{8}M(D^2+d^2)$ [kg·m²]	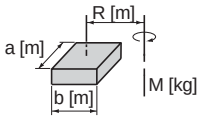	$J=\frac{M}{4}\left(\frac{a^2+b^2}{3}+4R^2\right)$ [kg·m²]
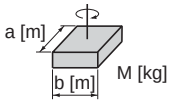	$J=\frac{1}{12}M(a^2+b^2)$ [kg·m²]	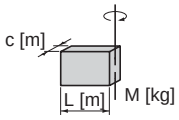	$J=\frac{1}{12}M(4L^2+C^2)$ [kg·m²]

(2) Moment of Inertia of Rectilinear Motion (Loaded Shaft Side)

General application	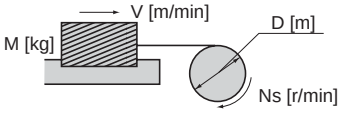	$J=\frac{M}{4}\left(\frac{V}{\pi Ns}\right)^2=\frac{M}{4}D^2$ [kg·m²]
Horizontal motion by conveyor	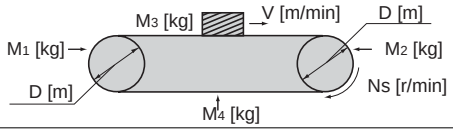	$J=\frac{1}{4}\left(\frac{M_1+M_2}{2}+M_3+M_4\right)\times D^2$ [kg·m²]
Horizontal motion by lead screw	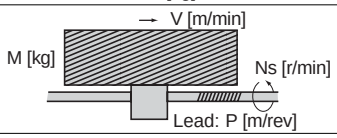	$J=\frac{M}{4}\left(\frac{V}{\pi Ns}\right)^2=\frac{M}{4}\left(\frac{P}{\pi}\right)^2$ [kg·m²]
Vertical motion by hoist	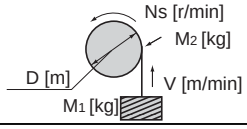	$J=\frac{M_1D^2}{4}+\frac{1}{8}M_2D^2$ [kg·m²]

(3) Calculation of Moment of Inertia at Different Rotating Speeds

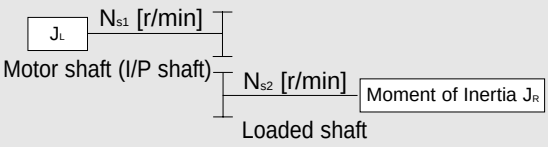

$$J_L=\left(\frac{N_{s2}}{N_{s1}}\right)^2 J_R=\left(\frac{1}{Z}\right)^2 J_R$$

Z: Total ratio

Introduction to Moment of Inertia · GD^2

3. Calculation of GD^2

(1) GD^2 of Rotating Motion

Rotating motion on the center of gravity		Rotating motion off the center of gravity	
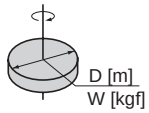	$GD^2=\frac{1}{2}WD^2$ [kgf·m²]	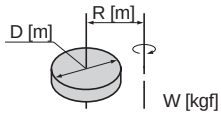	$GD^2=W\left(\frac{1}{2}D^2+4R^2\right)$ [kgf·m²]
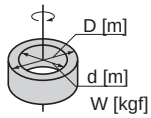	$GD^2=\frac{1}{2}W(D^2+d^2)$ [kgf·m²]	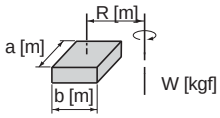	$GD^2=W\left(\frac{a^2+b^2}{3}+4R^2\right)$ [kgf·m²]
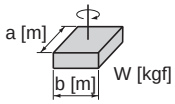	$GD^2=\frac{1}{3}W(a^2+b^2)$ [kgf·m²]	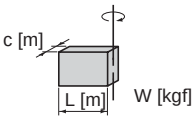	$GD^2=\frac{1}{3}W(4L^2+C^2)$ [kgf·m²]

(2) GD^2 of Rectilinear Motion (Loaded Shaft Side GD^2)

General application	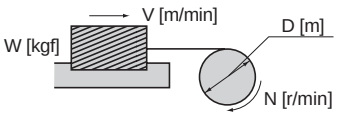	$GD^2=W\left(\frac{V}{\pi\cdot N}\right)^2=WD^2$	[kgf·m²]
Horizontal motion by conveyor	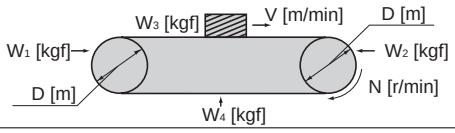	$GD^2=\left(\frac{W_1+W_2}{2}+W_3+W_4\right)\times D^2$	[kgf·m²]
Horizontal motion by lead screw	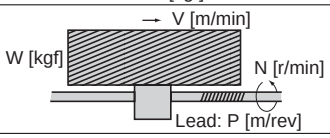	$GD^2=W\left(\frac{V}{\pi\cdot N}\right)^2=W\left(\frac{P}{\pi}\right)^2$	[kgf·m²]
Vertical motion by hoist	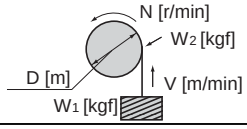	$GD^2=W_1D^2+\frac{1}{2}W_2D^2$	[kgf·m²]

(3) Calculation of Moment of Inertia at Different Rotating Speeds

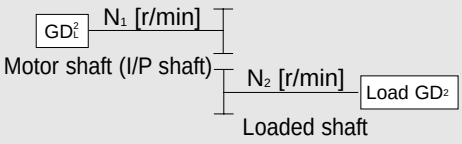

$$GD_L^2=\left(\frac{N_2}{N_1}\right)^2GD^2=\left(\frac{1}{Z}\right)^2GD^2$$

Z: Total ratio

TECHNICAL DATA

Reducer

Introduction to Moment of Inertia · GD²

Moment of Inertia · GD²

Table F-15 Moment of Inertia, GD² on Motor Shaft of CYCLO® Gearmotor (Single Stage Reduction, CYCLO Part Only)

Unit: GD_C^2 ($\times 10^{-4}$kgf·m²) J_C (Moment of inertia) ($\times 10^{-4}$kg·m²)

Frame Size	Reduction Ratio															
	6		8		11		13		15		17		21		25	
	GD_C^2	J_C	GD_C^2	J_C	GD_C^2	J_C	GD_C^2	J_C	GD_C^2	J_C	GD_C^2	J_C	GD_C^2	J_C	GD_C^2	J_C
6060 6065	0.666	0.167	0.532	0.133	0.449	0.112	0.423	0.106	0.407	0.102	0.396	0.099	0.378	0.095	0.366	0.092
6070 6075	0.682	0.171	0.541	0.135	0.454	0.114	0.426	0.107	0.409	0.102	0.398	0.100	0.379	0.095	0.367	0.092
6080 6085	1.61	0.403	1.32	0.330	1.12	0.280	1.07	0.268	1.02	0.255	0.997	0.249	0.688	0.172	0.665	0.166
6090 6095	3.82	0.955	2.96	0.740	2.37	0.593	2.49	0.623	2.42	0.605	2.12	0.530	1.61	0.403	1.56	0.390
6100 6105	3.07	0.768	2.22	0.555	1.36	0.340	1.40	0.350	1.28	0.320	0.897	0.224	1.03	0.258	0.942	0.236
6110 6115	5.99	1.50	4.44	1.11	3.38	0.845	3.07	0.768	2.88	0.720	2.75	0.688	2.44	0.610	2.38	0.595
6120 6125	12.4	3.10	10.1	2.53	6.24	1.56	6.82	1.71	6.46	1.62	4.82	1.21	5.56	1.39	5.17	1.29
6130 6135	34.3	8.58	23.5	5.88	17.3	4.33	14.7	3.68	13.2	3.30	12.1	3.03	10.0	2.51	9.39	2.35
6140 6145	37.7	9.43	25.6	6.40	18.2	4.55	14.7	3.68	13.3	3.33	11.8	2.95	10.1	2.52	9.41	2.35
6160 6165	98.7	24.7	68.9	17.2	45.4	12.4	41.5	11.0	37.7	9.90	32.2	8.35	29.9	7.65	28.2	71.5
6170 6175	264	66.0	197	49.3	153	37.5	140	35.3	124	31.3	119	30.0	111	28.0	107	27.0
6180 6185	-	-	-	-	231	58.5	209	52.8	186	46.8	177	44.5	167	42.3	156	39.3
6190 6195	-	-	-	-	545	136	503	126	478	120	460	115	428	107	415	104
6205	-	-	-	-	646	162	-	-	565	141	-	-	517	129	-	-
6215	-	-	-	-	990	248	-	-	864	216	-	-	789	197	-	-
6225	-	-	-	-	1220	305	-	-	1030	258	-	-	927	232	-	-
6235	-	-	-	-	1990	498	-	-	1710	428	-	-	1530	383	-	-
6245	-	-	-	-	3610	903	-	-	3170	793	-	-	2890	723	-	-
6255	-	-	-	-	5870	1470	-	-	5120	1280	-	-	4630	1160	-	-
6265	-	-	-	-	8590	2150	-	-	7460	1870	-	-	6800	1700	-	-
6275	-	-	-	-	-	-	-	-	-	-	-	-	-	-	-	-

Frame Size	Reduction Ratio															
	29		35		43		51		59		71		87		119	
	GD_C^2	J_C	GD_C^2	J_C	GD_C^2	J_C	GD_C^2	J_C	GD_C^2	J_C	GD_C^2	J_C	GD_C^2	J_C	GD_C^2	J_C
6060 6065	0.361	0.090	0.356	0.089	0.351	0.088	-	-	-	-	-	-	-	-	-	-
6070 6075	0.362	0.091	0.356	0.089	0.351	0.088	0.348	0.087	0.346	0.087	-	-	-	-	-	-
6080 6085	0.650	0.163	0.633	0.158	0.380	0.095	0.373	0.093	0.370	0.093	0.365	0.091	0.363	0.091	-	-
6090 6095	1.30	0.325	1.01	0.253	0.993	0.248	0.968	0.242	0.723	0.181	0.954	0.239	0.712	0.178	0.944	0.236
6100 6105	0.651	0.163	0.607	0.152	0.573	0.143	0.790	0.198	0.528	0.132	0.767	0.192	0.511	0.128	0.750	0.188
6110 6115	2.32	0.580	2.23	0.558	2.19	0.548	2.13	0.533	2.12	0.530	2.10	0.525	2.09	0.523	-	-
6120 6125	3.63	0.908	3.46	0.865	3.30	0.825	4.58	1.15	3.15	0.788	4.48	1.12	3.04	0.760	-	-
6130 6135	8.63	2.16	8.33	2.08	7.84	1.96	7.71	1.93	7.64	1.91	7.45	1.86	7.40	1.85	-	-
6140 6145	8.63	2.16	8.34	2.09	7.84	1.96	7.65	1.91	7.64	1.91	7.45	1.86	7.40	1.85	-	-
6160 6165	25.2	6.35	24.3	6.10	23.3	5.85	23.0	5.75	23.1	5.78	22.1	5.53	21.8	5.45	-	-
6170 6175	102	25.5	100	25.3	97.7	24.5	96.7	24.2	95.6	23.9	95.2	23.8	94.7	23.7	-	-
6180 6185	149	37.5	147	37.0	144	36.0	140	35.0	139	34.8	138	34.5	137	34.3	-	-
6190 6195	402	101	393	98.3	387	96.8	383	95.8	380	95.0	378	94.5	376	94.0	-	-
6205	482	121	-	-	460	115	-	-	451	113	-	-	446	117	-	-
6215	735	184	-	-	700	175	-	-	686	172	-	-	678	170	-	-
6225	840	210	-	-	788	197	-	-	766	192	-	-	753	188	-	-
6235	1410	353	-	-	1340	335	-	-	1300	325	-	-	1290	323	-	-
6245	2720	680	-	-	2600	650	-	-	2550	638	-	-	2530	633	-	-
6255	4320	1080	-	-	4140	1040	-	-	4060	1020	-	-	4010	1000	-	-
6265	6330	1580	-	-	6030	1510	-	-	5900	1480	-	-	5820	1460	-	-
6275	19600	4900	-	-	18900	4730	-	-	18600	4650	-	-	18400	4600	-	-

Note: 1. Table F-15 does not include GD² of motor.
Obtain the GD² of the single stage reduction gearmotor by adding the GD² of the motor Tables F-19, 20.
2. Calculate the GD² of the 2-Stage reduction model from the following formula:

$$GD^2 \text{ of the 2-stage reduction model} = GD^2 \text{ of 1st stage} + \frac{GD^2 \text{ (2nd stage)}}{(\text{Reduction ratio of 1st stage})^2}$$

Calculate the GD² of the 1st stage (input side)in the same manner as calculating the GD² of single stage reduction model.
For the GD² of the 2nd stage (output side), the values shown in Table F-15 may be used.

*The values in Table F-15 are subject to change without notice.

Introduction to Moment of Inertia · GD²

Table F-16 Moment of Inertia · GD² on High Speed Shaft of CYCLO® Reducer (Single Stage Reducer)

Unit: GD_C^2 ($\times 10^{-4}$kgf·m²) J_C (Moment of inertia) ($\times 10^{-4}$kg·m²)

Frame Size	Reduction Ratio															
	6		8		11		13		15		17		21		25	
	GD_C^2	J_C	GD_C^2	J_C	GD_C^2	J_C	GD_C^2	J_C	GD_C^2	J_C	GD_C^2	J_C	GD_C^2	J_C	GD_C^2	J_C
6060 6065	0.764	0.191	0.630	0.158	0.547	0.137	0.521	0.130	0.505	0.126	0.494	0.124	0.476	0.119	0.464	0.116
6070 6075	0.780	0.195	0.639	0.160	0.552	0.138	0.524	0.131	0.507	0.127	0.496	0.124	0.477	0.119	0.465	0.116
6080 6085	1.70	0.425	1.41	0.353	1.22	0.305	1.16	0.290	1.11	0.278	1.09	0.273	0.782	0.196	0.759	0.190
6090 6095	4.06	1.015	2.73	0.683	2.60	0.650	2.25	0.563	2.18	0.545	2.36	0.590	1.380	0.345	1.330	0.333
6100 6105	3.32	0.830	1.98	0.495	1.60	0.400	1.15	0.288	1.03	0.259	1.18	0.295	0.783	0.196	0.695	0.174
6110 6115	6.23	1.56	4.68	1.17	3.62	0.905	3.31	0.828	3.12	0.780	2.99	0.748	2.68	0.670	2.62	0.655
6120 6125	13.8	3.45	8.68	2.17	7.64	1.91	5.42	1.36	5.06	1.27	6.22	1.56	4.17	1.04	3.77	0.943
6130 6135	36.8	9.20	26.0	6.50	19.8	4.95	17.2	4.30	15.8	3.95	14.6	3.65	12.6	3.15	18.9	4.73
6140 6145	41.7	10.4	28.9	7.23	21.2	5.30	17.3	4.33	15.8	3.95	14.5	3.63	12.6	3.15	12.0	3.00
6160 6165	146	36.5	116	29.0	92.6	23.2	88.7	22.2	84.9	21.2	79.4	19.9	77.1	19.3	75.4	18.9
6170 6175	315	78.8	248	62.0	204	51.0	191	47.8	175	43.8	170	42.5	161	40.3	158	39.5
6180 6185	-	-	-	-	292	73.0	271	67.8	247	61.8	239	59.8	228	57.0	217	54.3
6190 6195	-	-	-	-	678	169	636	159	611	152	594	148	561	140	548	137
6205	-	-	-	-	946	237	-	-	864	216	-	-	817	204	-	-
6215	-	-	-	-	1490	373	-	-	1360	340	-	-	1290	323	-	-
6225	-	-	-	-	1930	483	-	-	1750	438	-	-	1640	410	-	-
6235	-	-	-	-	3240	810	-	-	2960	740	-	-	2780	695	-	-
6245	-	-	-	-	4940	1240	-	-	4500	1130	-	-	4220	1060	-	-
6255	-	-	-	-	8910	2230	-	-	8160	2040	-	-	7670	1920	-	-
6265	-	-	-	-	11700	2930	-	-	10600	2650	-	-	9960	2490	-	-
6275	-	-	-	-	-	-	-	-	-	-	-	-	-	-	-	-

Frame Size	Reduction Ratio																GD² of fan Moment of Inertia	
	29		35		43		51		59		71		87		119			
	GD_C^2	J_C	GD_C^2	J_C	GD_C^2	J_C	GD_C^2	J_C	GD_C^2	J_C	GD_C^2	J_C	GD_C^2	J_C	GD_C^2	J_C	GD_C^2	J_C
6060 6065	0.460	0.115	0.454	0.114	0.449	0.112	-	-	-	-	-	-	-	-	-	-	-	-
6070 6075	0.460	0.115	0.454	0.114	0.450	0.113	0.446	0.112	0.445	0.111	-	-	-	-	-	-	-	-
6080 6085	0.744	0.186	0.727	0.182	0.474	0.119	0.467	0.117	0.463	0.116	0.459	0.115	0.456	0.114	-	-		
6090 6095	1.54	0.385	1.25	0.313	1.23	0.308	0.731	0.183	0.960	0.240	0.717	0.179	0.949	0.237	0.707	0.177	-	-
6100 6105	0.899	0.225	0.854	0.214	0.820	0.205	0.543	0.136	0.776	0.194	0.520	0.130	0.758	0.190	0.503	0.126	-	-
6110 6115	2.56	0.64	2.47	0.618	2.43	0.608	2.37	0.593	2.36	0.590	2.34	0.585	2.33	0.583	-	-	-	-
6120 6125	5.03	1.26	4.86	1.22	4.70	1.18	3.19	0.798	4.55	1.14	3.08	0.770	4.44	1.11	-	-	-	-
6130 6135	11.2	2.80	10.9	2.73	10.3	2.58	10.2	2.55	10.2	2.55	9.97	2.49	9.93	2.48	-	-	-	-
6140 6145	11.2	2.80	10.9	2.73	10.3	2.58	10.2	2.55	10.2	2.55	9.99	2.50	9.93	2.48	-	-	-	-
6160 6165	72.4	18.1	71.5	17.9	70.5	17.6	70.2	17.6	70.3	17.6	69.3	17.3	69.0	17.3	-	-	35.4	8.85
6170 6175	153	38.3	151	37.8	148	37.0	147	36.8	146	36.5	146	36.5	145	36.3	-	-	33.3	8.33
6180 6185	211	52.8	209	52.3	206	51.5	202	50.5	200	50.0	199	49.8	198	49.5	-	-	32.7	8.18
6190 6195	535	133	527	131	520	130	516	129	513	128	511	127	509	127	-	-	83.6	20.9
6205	782	196	-	-	760	190	-	-	750	188	-	-	745	186	-	-	248	62.0
6215	1240	310	-	-	1200	300	-	-	1190	298	-	-	1180	295	-	-	419	105
6225	1550	388	-	-	1500	375	-	-	1480	370	-	-	1470	368	-	-	599	150
6235	2660	665	-	-	2580	645	-	-	2550	638	-	-	2530	633	-	-	1040	260
6245	4040	1010	-	-	3930	983	-	-	3880	970	-	-	3850	963	-	-	1040	260
6255	7360	1840	-	-	7180	1800	-	-	7100	1780	-	-	7060	1770	-	-	2370	593
6265	9480	2370	-	-	9180	2300	-	-	9050	2260	-	-	8980	2250	-	-	2370	593
6275	-	-	-	-	29900	7480	-	-	29600	7400	-	-	29400	7350	-	-	9540	2390

Note: 1. The value of the fan has been to the GD² of the Frame sizes of 6160~6275.
2. The GD² of the 2-stage reduction model is calculated by the following formula:

$$GD^2 \text{ of the 2-stage reduction model} = GD^2 \text{ of 1st stage} + \frac{GD^2 \text{ (2nd stage)}}{(\text{Reduction ratio of 1st stage})^2}$$

Use value in Table F-16 for GD² of 1st stage.
For the GD² of the 2nd stage, deduct the GD² of the fan from the value in Table F-16.

*The values in Table F-16 are subject to change without notice.

Moment of Inertia · GD²

Table F-17 (6000SK Series, Gearmotor)

Unit: GD_C^2 (× 10^{-4}kgf·m²) J_C (Moment of inertia) (× 10^{-4}kgf·m²)

Frame Size	Nominal Reduction Ratio													
	2.5		3		4		5		6		8		10	
	GD_C^2	J_C	GD_C^2	J_C	GD_C^2	J_C	GD_C^2	J_C	GD_C^2	J_C	GD_C^2	J_C	GD_C^2	J_C
6070SK 6075SK	1.62	0.406	1.27	0.317	0.775	0.194	1.38	0.346	1.09	0.272	0.679	0.170	0.660	0.165
6080SK 6085SK	4.23	1.06	3.91	0.977	0.802	0.201	0.527	0.132	1.81	0.452	1.43	0.359	1.38	0.346
6090SK 6095SK	10.0	2.51	7.81	1.95	6.80	1.70	6.36	1.59	4.44	1.11	2.51	0.628	2.40	0.601
6100SK 6105SK	10.0	2.51	7.81	1.95	6.80	1.70	6.36	1.59	4.44	1.11	2.51	0.628	2.40	0.601
6110SK 6115SK	22.5	5.63	20.5	5.13	18.6	4.64	14.3	3.58	9.97	2.49	6.84	1.71	6.42	1.61

Note: 1. Table F-17 does not include GD² of motor.
Obtain the GD² of the single stage reduction gearmotor by adding the GD² of the motor Tables F-19, 20.

*Values in the table are subject to change without notice.

Table F-18 (6000SK Series, Reducer)

Unit: GD_C^2 (× 10^{-4}kgf·m²) J_C (Moment of inertia) (× 10^{-4}kgf·m²)

Frame Size	Nominal Reduction Ratio													
	2.5		3		4		5		6		8		10	
	GD_C^2	J_C	GD_C^2	J_C	GD_C^2	J_C	GD_C^2	J_C	GD_C^2	J_C	GD_C^2	J_C	GD_C^2	J_C
6070SK 6075SK	1.71	0.428	1.36	0.340	0.865	0.216	1.47	0.368	1.18	0.295	0.769	0.192	0.750	0.187
6080SK 6085SK	4.47	1.12	4.15	1.04	1.04	0.261	0.767	0.192	2.05	0.512	1.67	0.419	1.62	0.406
6090SK 6095SK	10.3	2.57	8.06	2.01	7.05	1.76	6.61	1.65	4.69	1.17	2.76	0.691	2.65	0.663
6100SK 6105SK	10.3	2.57	8.05	2.01	7.04	1.76	6.60	1.65	4.68	1.17	2.75	0.688	2.64	0.661
6110SK 6115SK	23.9	5.98	21.9	5.48	20.0	4.99	15.7	3.93	11.4	2.84	8.24	2.06	7.82	1.96

*Values in the table are subject to change without notice.

Table F-19 Moment of Inertia · GD² of Three Phase Motor

4P Motor

Unit: GD^2_M [kgf·m²] J_M (Moment of inertia) [kg·m²]

kW × P	0.1kW × 4P		0.2kW × 4P		0.25kW × 4P		0.4kW × 4P		0.55kW × 4P		0.75kW × 4P	
	GD^2_M	J_M	GD^2_M	J_M	GD^2_M	J_M	GD^2_M	J_M	GD^2_M	J_M	GD^2_M	J_M
Standard	0.0013	0.000325	0.0020	0.000500	0.0020	0.000500	0.0026	0.000650	0.0041	0.00101	0.0048	0.00120
With Brake	0.0014	0.000350	0.0022	0.000550	0.0022	0.000550	0.0027	0.000675	0.0045	0.00111	0.0052	0.00130

kW × P	1.1kW × 4P		1.5kW × 4P		2.2kW × 4P		3.0kW × 4P		3.7kW × 4P		5.5kW × 4P	
	GD^2_M	J_M	GD^2_M	J_M	GD^2_M	J_M	GD^2_M	J_M	GD^2_M	J_M	GD^2_M	J_M
Standard	0.0074	0.00185	0.0085	0.00213	0.0133	0.00333	0.0281	0.00700	0.0339	0.00848	0.0457	0.0114
With Brake	0.0083	0.00208	0.0094	0.00235	0.0149	0.00373	0.0325	0.00810	0.0383	0.00958	0.0501	0.0125

kW × P	7.5kW × 4P		11kW × 4P		15kW × 4P		18.5kW × 4P		22kW × 4P		30W × 4P	
	GD^2_M	J_M	GD^2_M	J_M	GD^2_M	J_M	GD^2_M	J_M	GD^2_M	J_M	GD^2_M	J_M
Standard	0.107	0.0268	0.150	0.0375	0.359	0.0898	0.900	0.225	0.900	0.225	1.00	0.250
With Brake	0.121	0.0303	0.164	0.0410	0.428	0.107	0.972	0.243	0.972	0.243	1.05	0.262

kW × P	37kW × 4P		45kW × 4P		55kW × 4P	
	GD^2_M	J_M	GD^2_M	J_M	GD^2_M	J_M
Standard	1.23	0.308	1.37	0.343	2.70	0.675
With Brake	1.28	0.321	-	-	-	-

6P Motor

kW × P	0.1kW × 6P		0.2kW × 6P		0.25kW × 6P		0.4kW × 6P		0.55kW × 6P		0.75kW × 6P	
	GD^2_M	J_M	GD^2_M	J_M	GD^2_M	J_M	GD^2_M	J_M	GD^2_M	J_M	GD^2_M	J_M
Standard	0.0023	0.000575	0.0031	0.000775	0.0031	0.000775	0.0067	0.00168	0.0077	0.00193	0.0120	0.00300
With Brake	0.0025	0.000625	0.0032	0.000800	0.0032	0.000800	0.0071	0.00178	0.0081	0.00203	0.0129	0.00323

kW × P	1.1kW × 6P		1.5kW × 6P		2.2kW × 6P		3.0kW × 6P		3.7kW × 6P		5.5kW × 6P	
	GD^2_M	J_M	GD^2_M	J_M	GD^2_M	J_M	GD^2_M	J_M	GD^2_M	J_M	GD^2_M	J_M
Standard	0.0145	0.00363	0.0212	0.00530	0.0527	0.0132	0.0657	0.0164	0.0740	0.0185	0.140	0.0350
With Brake	0.0154	0.00385	0.0228	0.00570	0.0571	0.0143	0.0701	0.0175	0.0784	0.0196	0.154	0.0385

kW × P	7.5kW × 6P		11kW × 6P		15kW × 6P		18.5kW × 6P		22kW × 6P		30W × 6P	
	GD^2_M	J_M	GD^2_M	J_M	GD^2_M	J_M	GD^2_M	J_M	GD^2_M	J_M	GD^2_M	J_M
Standard	0.286	0.0715	0.359	0.0898	1.27	0.318	1.45	0.363	1.45	0.363	1.90	0.475
With Brake	0.355	0.0888	0.428	0.1070	-	-	-	-	-	-	-	-

kW × P	37kW × 6P		45kW × 6P		55kW × 6P	
	GD^2_M	J_M	GD^2_M	J_M	GD^2_M	J_M
Standard	2.40	0.600	4.00	1.00	4.70	1.18
With Brake	-	-	-	-	-	-

Table F-20 Moment of Inertia · GD² of Motor for Inverter

Unit: GD^2_M [kgf·m²] J_M (Moment of inertia) [kg·m²]

kW × P	0.1kW × 4P		0.2kW × 4P		0.4kW × 4P		0.75kW × 4P		1.5kW × 4P		2.2kW × 4P	
	GD^2_M	J_M	GD^2_M	J_M	GD^2_M	J_M	GD^2_M	J_M	GD^2_M	J_M	GD^2_M	J_M
Standard	0.0020	0.000500	0.0026	0.000650	0.0048	0.00120	0.0085	0.00213	0.0133	0.00333	0.0339	0.00848
With Brake	0.0022	0.000550	0.0027	0.000675	0.0052	0.00130	0.0094	0.00235	0.0149	0.00373	0.0383	0.00958

kW × P	3.7kW × 4P		5.5kW × 4P		7.5kW × 4P		11kW × 4P		15kW × 4P		18.5W × 4P	
	GD^2_M	J_M	GD^2_M	J_M	GD^2_M	J_M	GD^2_M	J_M	GD^2_M	J_M	GD^2_M	J_M
Standard	0.0457	0.0114	0.107	0.0268	0.150	0.0375	0.359	0.0898	0.900	0.225	1.00	0.250
With Brake	0.0501	0.0125	0.121	0.0303	0.164	0.0410	0.428	0.1070	0.972	0.243	1.05	0.262

kW × P	22kW × 4P		30kW × 4P		37kW × 4P	
	GD^2_M	J_M	GD^2_M	J_M	GD^2_M	J_M
Standard	1.00	0.250	1.23	0.308	1.37	0.343
With Brake	1.05	0.262	1.28	0.321	-	-

Moment of Inertia · GD^2

Example 1: CNHM2-6115-29

(1) J_M = 0.00213kg·m²
(Standard 1.5kW × 4-Pole motor in Table F-19)

(2) Frame size 6115 of CYCLO® reducer.
J_C: Reduction ratio of 29 = 0.580 × 10^{-4}kg·m² (From the Table F-15)

(3) ΣJ_C of CNHM2-6115-29

ΣJ = Motor J_M + CYCLO® reducer J_C
= 0.00213 + 0.000058
= 0.002188kg·m²

Example 2: CVVM20-6215DA-165 (15 × 11)

(1) J_M = 0.0898kg·m² (Standard 15kW × 4-Pole motor in Table F-19)

(2) Combination of CYCLO® reducer, Frame size 6215 with ratio 15 + Frame size 6135 with ratio 11 (Refer to Page A-4)

(3) 1st stage of 6135 Ratio 11, J_C = 4.33 × 10^{-4}kg·m²

(4) 2nd stage of 6215 Ratio 15, J_C = 216 × 10^{-4}kg·m²
(Both (3) & (4) from Table F-15)

(5) CYCLO® reducer $J_C = 4.33 \times 10^{-4} + \dfrac{216 \times 10^{-4}}{11^2} = 0.0006$kg·m²

(6) ΣJ of CVVM20-6215DA-165

ΣJ = Motor J_M + CYCLO® reducer J_C
= 0.0898 + 0.0006
= 0.0904kg·m²

1. Construction of 6000 Series

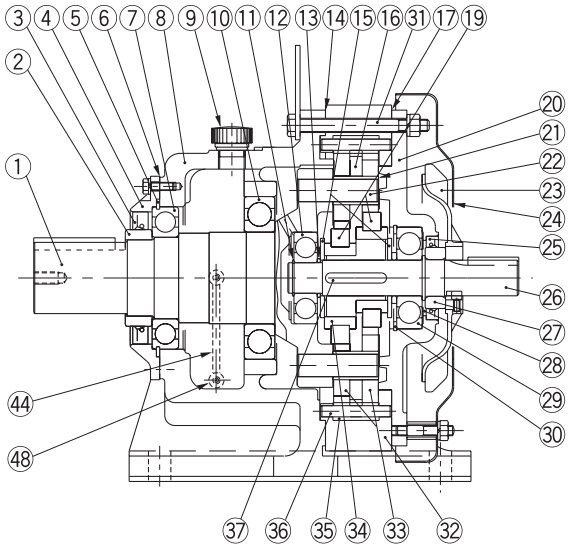

Fig F-10 Type CHH (Horizontal, Reducer) Single reduction
(Example: Frame size 6175)

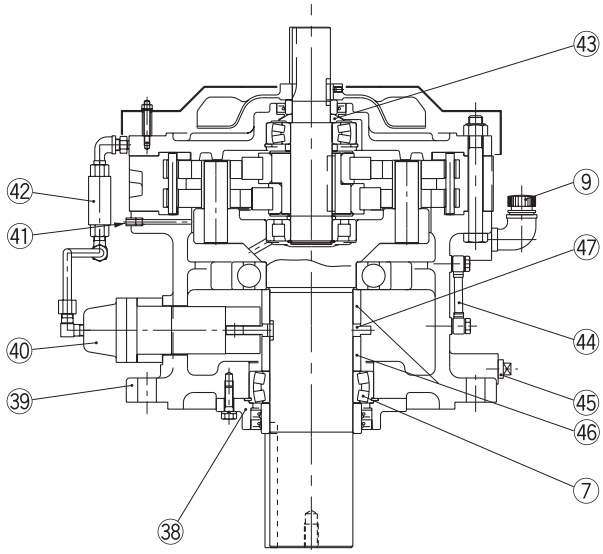

Fig F-11 Type CVV (Vertical, Reducer) Single reduction
(Example: Frame size 6225)

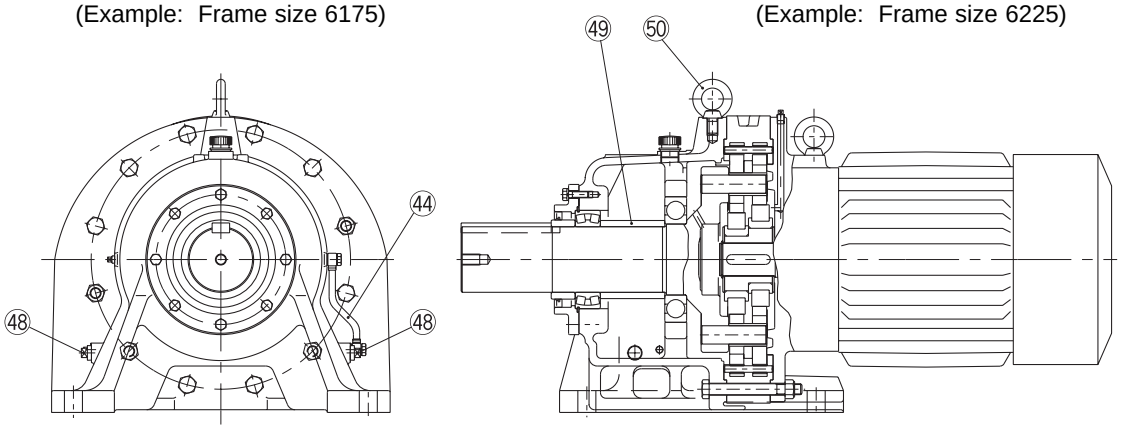

Fig F-12 Type CHHM (Horizontal, Gearmotor) Single reduction
(Example: Frame size 6225)

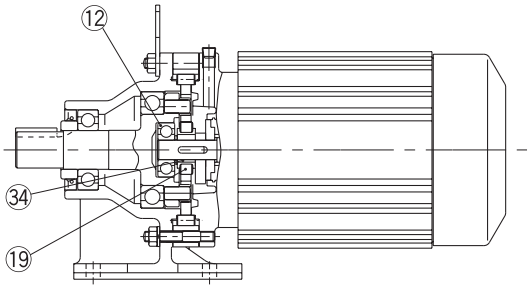

Fig F-13 Type CNHM (Horizontal, Gearmotor) Single reduction
(Example: Frame size 6095)

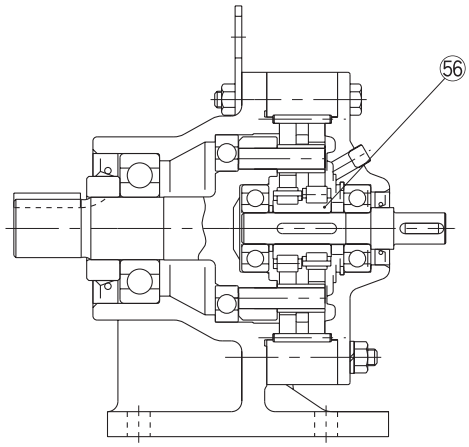

Fig F-14 Type CNH (Horizontal, Reducer) Single reduction
(Example: Frame size 6105)

Construction Drawing

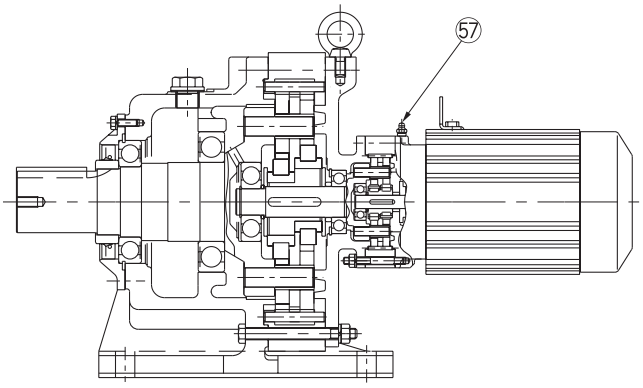

Fig F-15 Type CHHM (Horizontal, Gearmotor)
Double reduction
(Example: Frame size grease lubricated 6185DB)

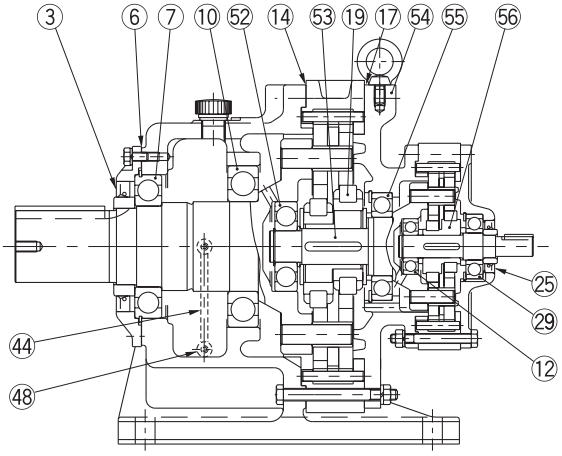

Fig F-16 Type CHH (Horizontal, Reducer)
Double reduction
(Example: Frame size 6185DB)

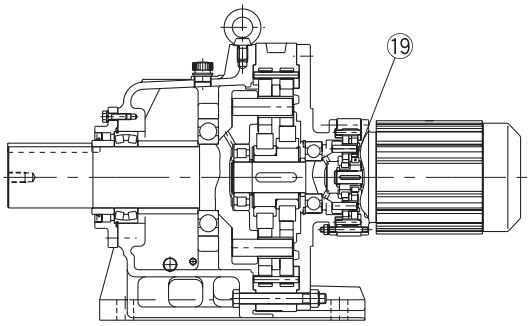

Fig F-17 Type CHHM (Horizontal, Gearmotor)
Double reduction
(Example: Frame size 6225DB)

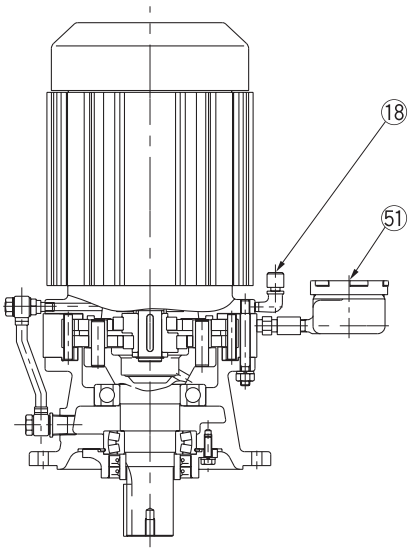

Fig F-18 Type CVVM
(Vertical, Gearmotor)
Single reduction
(Example: Frame size 6145)

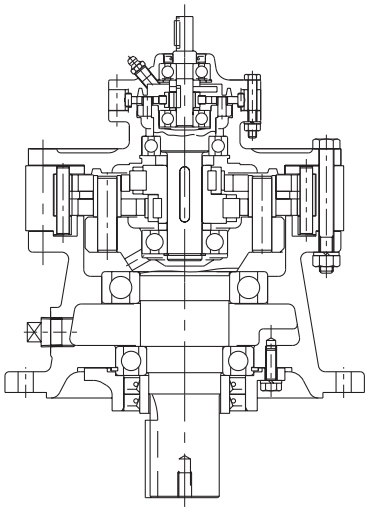

Fig F-19 Type CVV
(Vertica, Reducer)
Double reduction
(Example: Frame size 6135DA)

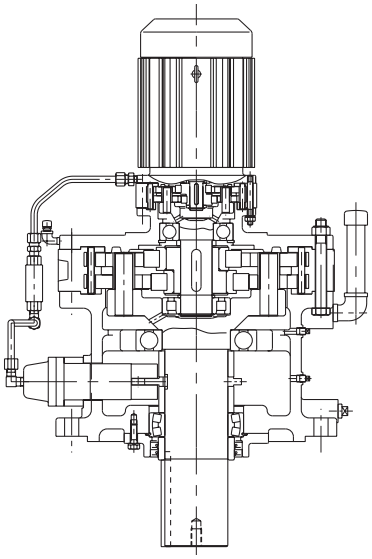

Fig F-20 Type CVVM
(Vertical, Gearmotor)
Double reduction
(Example: Frame size 6225DA)

Principal parts

No.	Part Name	No.	Part Name	No.	Part Name	No.	Part Name	No.	Part Name
1	Slow speed shaft	13	Spacer	25	Oil seal	37	Key	49	Spacer
2	Collar (Slow speed shaft)	14	Gasket B	26	High speed shaft	38	Gland	50	Eye bolt
3	Oil seal	15	End plate	27	Collar (High Speed Shaft)	39	Flanged casing	51	Oil filler
4	Slow speed end cap	16	Spacer ring	28	Spacer	40	Plunger pump	52	Intermediate shaft, bearing A
5	Retaining ring	17	Gasket C	29	High speed shaft, bearing B	41	Air vent plug	53	Intermediate shaft
6	Gasket A	18	Air vent plug	30	Retaining ring	42	Oil signal	54	Intermediate cover
7	Slow speed shaft, bearing A	19	Bearing for eccentric (High speed shaft section)	31	Bolt for ring gear housing	43	Oil slinger	55	Intermediate shaft, bearing B
8	Horizontal casing	20	High speed end shield	32	Ring gear housing	44	Oil level gauge	56	Eccentric bearing (Double)
9	Oil filler plug	21	Slow speed shaft roller	33	Cycloid disc	45	Plug (Oil drain)	57	Grease nipple
10	Slow speed shaft, bearing B	22	Slow speed shaft pin	34	Eccentric	46	Spacer		
11	Retaining ring	23	Cooling fan	35	Ring gear roller	47	Cam		
12	High speed shaft, bearing A	24	Fan cover	36	Ring gear pin	48	Plug (Oil drain)		

2. Construction of 6000SK Series

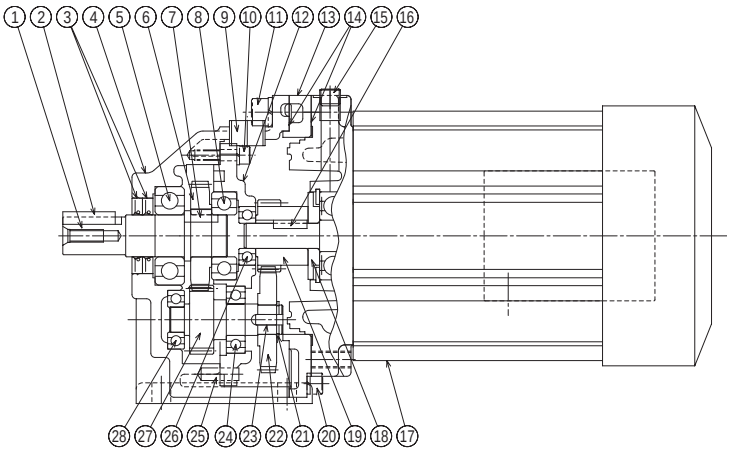

Fig F-21 Type CHHM
(6000SK Series Horizontal, Gearmotor)
(Example: Frame size 6075SK)

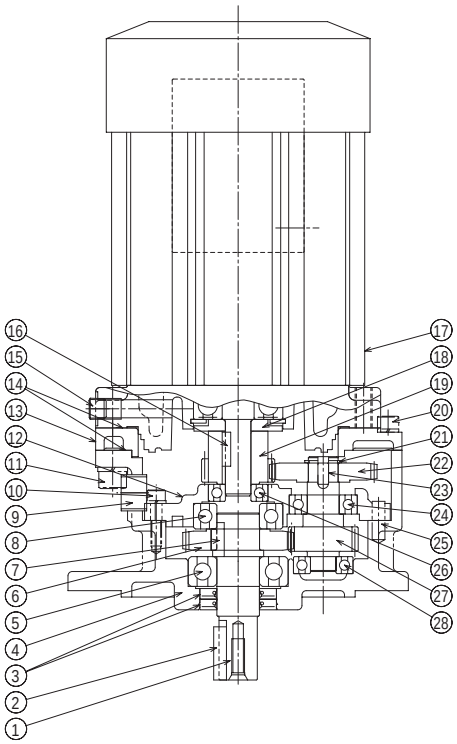

Fig F-22 Type CVVM
(6000SK Series Vertical, Gearmotor)
(Example: Frame size 6075SK)

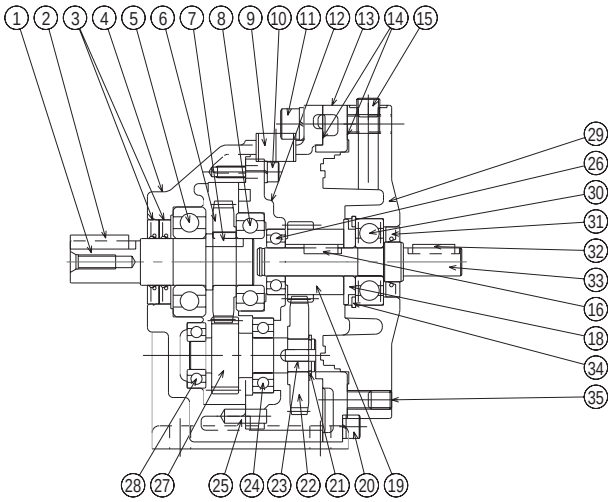

Fig F-23 Type CHH
(6000SK Series Horizontal, Reducer)
(Example: Frame size 6075SK)

Principal parts

No.	Part Name	No.	Part Name	No.	Part Name	No.	Part Name
1	Slow speed shaft (Output shaft)	11	Hexagon socket head cap screw	21	Snap ring	31	Oil seal
2	Key	12	Bearing plate	22	First gear	32	Key
3	Oil seal	13	Adapter plate	23	Key	33	High speed shaft
4	Horizontal casing	14	Liquid gasket	24	Bearing (B) for mid speed shaft	34	Snap ring
5	Bearing (A) for slow speed shaft	15	Plug	25	Pin	35	Hexagon socket head cap screw
6	Second gear	16	Key	26	Bearing (A) for high speed shaft		
7	Key	17	Motor	27	Second pinion (middle speed shaft)		
8	Bearing (B) for slow speed shaft	18	Oil slinger	28	Bearing (A) for middle speed shaft		
9	Plug	19	First pinion	29	High speed end shield		
10	Hexagon socket head cap screw	20	Hexagon socket head cap screw	30	Bearing (B) for high speed shaft		

Detailed Dimension of Slow Speed Shaft

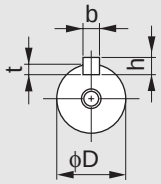

View from A

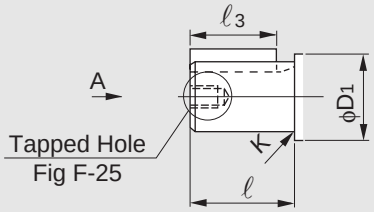

Fig F-24a

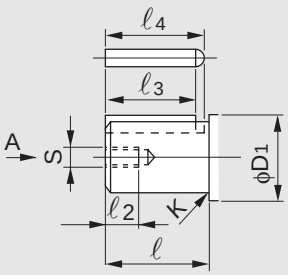

Fig F-24b

- Dimension of slow speed shaft end; Dimension tolerance in accordance with JIS B 0401-1976 "h6."
- Dimension of shaft end key; Parallel key in accordance with JIS B 1301-1996.

Table F-23 Dimension of Slow Speed Shaft

Frame Size			Slow Speed Shaft														
6000SK Series	6000Series Single	6000Series Double	Fig	D (h6)	Tolerance	D1	ℓ	K (Roundness)	t	Tolerance	b(key) (h9)	Tolerance	h(key)	Tolerance	ℓ3 (key)	ℓ4
-	6060	6060DA	F-24b	14	0 -0.011	30	25	-	3	+0.1 0	5	0 -0.030	5	0 -0.030	20	22.5
-	6065	6065DA														
-	6070	6070DA	F-24b	18		30	30	-	3.5		6		6		25	-
-	6075	6075DA														
6070SK	-	-				20		0.6								28
6075SK	-	-														
-	6080	-	F-24b	22	0 -0.013	45	35	-	3.5		6		6		30	33
-	6085	-														
6080SK	-	-				25		0.6								33
6085SK	-	-														
-	6090	6090DA	F-24a	28		45	35	-	4	+0.2 0	8	0 -0.036	7	0 -0.090	32	-
-	6095	6095DA														
6090SK	-	-	F-24b			30		0.5							27	32
6095SK	-	-														
-	6100	6100DA	F-24a	28		50	35	-	4		8		7		32	-
-	6105	6105DA														
-	610H	-														
6100SK	-	-	F-24b			30		0.5							27	32
6105SK	-	-														
-	6110	-	F-24b	32	0 -0.016	55	45	-	5		10		8		37	42
-	6115	-														
6110SK	-	-	F-24b			35		1							37	40
6115SK	-	-														
-	6120	6120DA 6120DB	F-24a	38		65	55	-	5		10		8		50	-
-	6125	6125DA 6125DB														
-	612H	-														

Table F-24 Dimension of Tapped Hole

Frame Size			Tap	Depth	Center hole		
6000SK Series	6000 Series Single	6000 Series Double	M	A	ϕD1	ϕD2	B
-	6060	6060DA	M5	16	7	5.2	2.6
-	6065	6065DA	M5	16	7	5.2	2.6
6070SK	6070	6070DA	M6	16	9	6.2	3.4
6075SK	6075	6075DA	M6	16	9	6.2	3.4
6080SK	6080	-	M6	16	9	6.2	3.4
6085SK	6085	-	M6	16	9	6.2	3.4
6090SK	6090	6090DA	M8	20	11	8.2	3.6
6095SK	6095	6095DA	M8	20	11	8.2	3.6
6100SK	6100	6100DA	M8	20	11	8.2	3.6
6105SK	6105	6105DA	M8	20	11	8.2	3.6
-	610H	-	M8	20	11	8.2	3.6
6110SK	6110	-	M8	20	11	8.2	3.6
6115SK	6115	-	M8	20	11	8.2	3.6
-	6120	6120DA 6120DB	M8	20	11	8.2	3.6
-	6125	6125DA 6125DB	M8	20	11	8.2	3.6
-	612H	-	M8	20	11	8.2	3.6

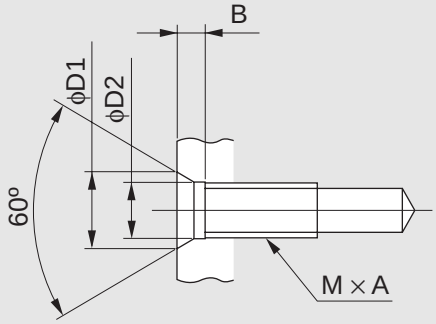

Fig F-25

Detailed Dimension of Slow Speed Shaft

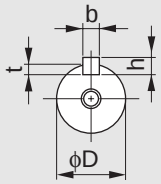

View from A

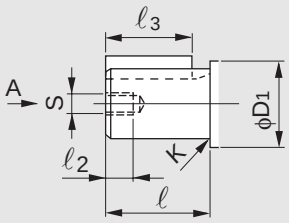

Fig F-26

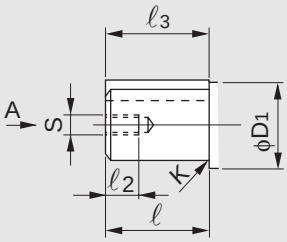

Fig F-27

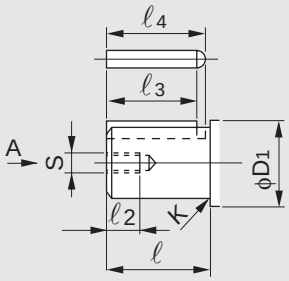

Fig F-28

Table F-25 Dimension of Slow Speed Shaft

Frame Size		Slow Speed Shaft															
Single	Double	Fig	D (h6)	Tolerance	D_1	ℓ	K (Roundness)	s	ℓ_2	t	Tolerance	b (key) (h9)	Tolerance	h (key)	Tolerance	ℓ_3 (key)	ℓ_4
6130	6130DA 6130DB 6130DC	F-26	50	0 -0.016	65	70 (61)	-	M10	18	5.5	+0.2 0	14	0 -0.043	9	0 -0.090	56	-
6135	6135DA 6135DB 6135DC	F-26															
6140	6140DA 6140DB 6140DC	F-26	50		65	90 (81)	-	M10	18	5.5		14		9		80	
6145	6145DA 6145DB 6145DC	F-26															
614H	-	F-26															
6160	6160DA 6160DB 6160DC	F-26	60	0 -0.019	85	90 (80)	-	M10	18	7		18		11	0 -0.110	80	-
6165	6165DA 6165DB 6165DC	F-26															
616H	-	F-26															
6170	6170DA 6170DB 6170DC	F-26	70		95	90 (84)	-	M12	24	7.5		20	0 -0.052	12		80	-
6175	6175DA 6175DB 6175DC	F-26															
6180	6180DA 6180DB	F-26	80		110	110 (100)	-	M12	24	9		22		14		100	-
6185	6185DA 6185DB	F-26															
6190	6190DA 6190DB	F-28	95	0 -0.022	120	135 (125)	-	M20	34	9		25		14		125	137.5
6195	6195DA 6195DB	F-28															
6205	6205DA 6205DB	F-27	100		120	165	-	M20	34	10		28		16		165	-
6215	6215DA 6215DB	F-27	110		130	165	-	M20	34	10		28		16		165	-
6225	6225DA 6225DB	F-27	120		145	165	-	M20	34	11		32	0 -0.063	18		165	-
6235	6235DA 6235DB	F-27	130	0 -0.025	160	200	-	M24	41	11	+0.3 0	32		18		200	-
6245	6245DA 6245DB	F-27	140		170	200	-	M24	41	12		36		20	0 -0.130	200	-
6255	6255DA 6255DB	F-27	160		190	240	-	M30	49	13		40		22		240	-
6265	6265DA	F-27	170		200	300	-	M30	49	13		40		22		300	-
6275	6275DA	F-27	180		230	330 (320)	-	M30	52	15		45		25		330 (320)	-

Note: Dimensions in parentheses for ℓ and ℓ_3 are for models with vertical output shaft.

Detailed Dimension of High Speed Shaft

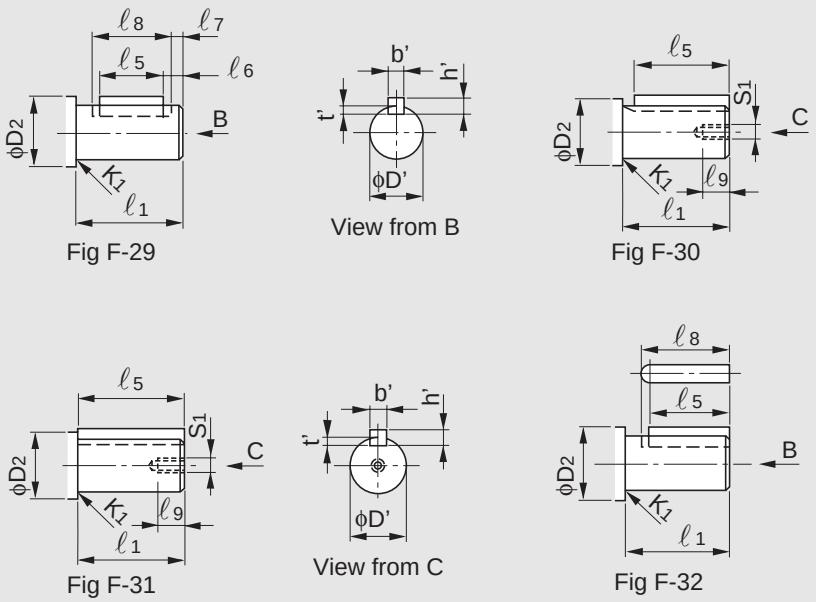

- Dimension of high speed shaft end; Dimension tolerance in accordance with JIS B 0401-1976 "h6".
- Dimension of shaft end key; Parallel key in accordance with JIS B 1301-1996.
- *S1 & 9 Dimension Tap Hole is only for vertical (Type CVV, CVF) Single stage only

Table F-26 Dimension of High Speed Shaft

Frame Size			High Speed Shaft																		
6000SK Series	6000 Series Single	6000 Series Double	Fig	D' (h6)	Tolerance	D_2	ℓ_1	K_1 (Roundness)	t'	Tolerance	b' (key) (h9)	Tolerance	h' (key)	Tolerance	ℓ_5 (key)	ℓ_6	ℓ_7	ℓ_8	*S_1	*ℓ_9
-	6060	6060DA 6070DA	F-29	12	0 -0.011	17	25	0.5	2.5	+0.1 0	4	0 -0.030	4	0 -0.030	18	3	1	22	-	-
-	6065	6065DA 6075DA	F-29																	
-	6070	6090DA 6100DA 6120DA 6130DA 6140DA	F-29	12		17	25	0.5	2.5		4		4		18				-	-
-	6075	6095DA 6105DA 6125DA 6135DA 6145DA	F-29																	
6070SK	6080	-	F-29	12		17	25	0.5	2.5		4		4		18				-	-
6075SK	6085	-	F-29																	
6080SK	6090	6120DB 6130DB 6140DB 6160DA 6170DA	F-29	15		20	25	1	3		5		5		16	3.5		21	-	-
6085SK	6095	6125DB 6135DB 6145DB 6165DA 6175DA	F-29																	
6090SK	6100	6130DC 6140DC 6160DB 6170DB 6180DA	F-29			20	25	1	3		5		5		16				-	-
6095SK	6105	6135DC 6145DC 6165DB 6175DB 6185DA	F-29																	
-	610H	-	F-29																	
6100SK	6110	-	F-29	15		20	25	1	3		5		5		16	3.5	1		-	-
6105SK	6115	-	F-29																	
6110SK	6120	6160DC 6170DC 6190DA	F-32	18		32	35	-	3.5		6		6		25	-	-	28	-	-
6115SK	6125	6165DC 6175DC 6195DA 6205DA	F-32																	
-	612H	-	F-32																	
-	6130	6180DC 6190DB	F-32	22	0 -0.013	38	40	-	3.5		6		6		32	-	-	35	-	-
-	6135	6185DB 6195DB 6205DB 6215DA 6255DA	F-32																	
-	6140	-	F-32	22		38	40	-	3.5		6		6		32				-	-
-	6145	-	F-32																	
-	614H	-	F-32																	
-	6160	6215DB	F-31	30		70	45	-	4	+0.2 0	8	0 -0.036	7	0 -0.090	45	-	-	-	M10	20
-	6165	6215DB 6235DA 6245DA	F-31																	
-	616H	-	F-31																	
-	6170	-	F-32	35	0 -0.016	70	55	-	5		10		8		50	-	-	-	M12	25
-	6175	6255DB 6255DA	F-32																	
-	6180	-	F-32	40		70	65	-	5		12	0 -0.043	8		63	-	-	-	M16	30
-	6185	6235DB 6245DB	F-32																	
-	6190	-	F-31	45		82	70	-	5.5		14		9		70	-	-	-	M16	30
-	6195	6255DB 6265DA 6275DA	F-31																	
-	6205	-	F-31	45		82	82	-	5.5		14		9		82	-	-	-	-	-
-	6215	-	F-31	50		82	82	-	5.5		14		9		82	-	-	-	-	-
-	6225	-	F-31	55	0 -0.019	90	82	-	6		16		10	0 -0.110	82	-	-	-	-	-
-	6235	-	F-31	60		110	105	-	7		18		11		105	-	-	-	-	-
-	6245	-	F-31	65		110	105	-	7		18		11		105	-	-	-	-	-
-	6255	-	F-31	80		130	130	-	9		22	0 -0.052	14		130	-	-	-	-	-
-	6265	-	F-31	80		130	130	-	9		22		14		140	-	-	-	-	-
-	6275	-	F-32	90	0 -0.022	140	150	-	9		25		14		140	-	-	152.5	-	-

F TECHNICAL DATA

2. Motor

Terminal Box Specifications

1. Construction of Terminal Box

Standard Motors

3-Phase Motor AF Motor	0.1 ~ 5.5kW × 4P 0.1 ~ 3.7kW × 4P	3-Phase Motor AF Motor	7.5 ~ 15kW × 4P 5.5 ~ 11kW × 4P
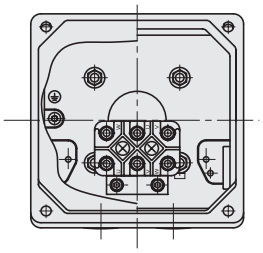	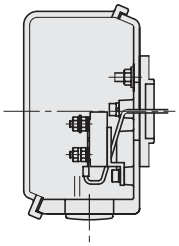	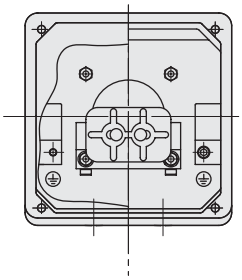	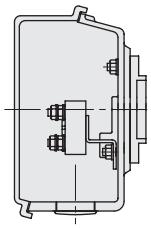

3-Phase Motor AF Motor	18.5 ~ 55kW × 4P 15 ~ 55kW × 4P
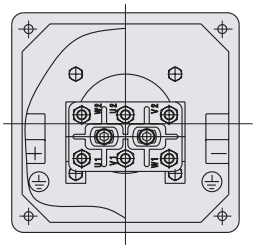	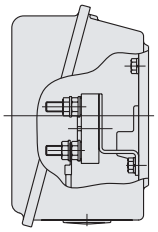

Increased Safety Motors

0.1 ~ 0.4kW × 4P	0.75 ~ 15kW × 4P	18.5 ~ 37kW × 4P 15 ~ 37kW × 6P	45 ~ 55kW × 4P 45 ~ 55kW × 6P
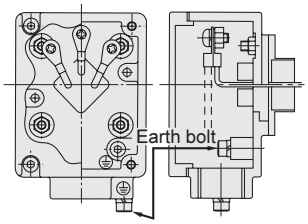	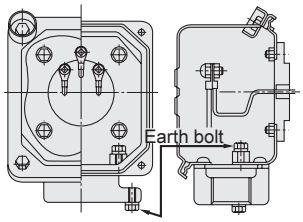	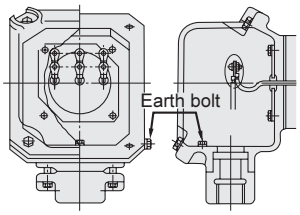	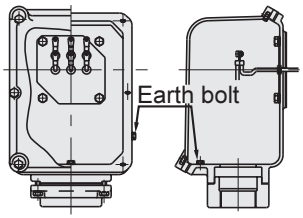

Flame Proof Motors

0.1 ~ 3.7kW × 4P	5.5 ~ 37kW × 4P 15 ~ 37kW × 6P
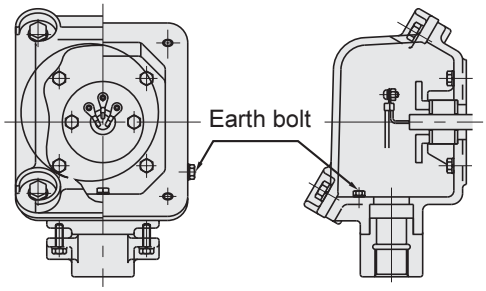	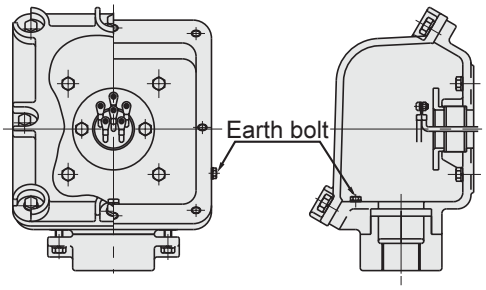

Terminal Box Specifications

2. Methods for Drawing Lead Wire Outside of Terminal Box.

Standard model	Conduit tube type (Option)	Packing type with threaded conduit joint (Option)	Cable gland for marine use (Option)
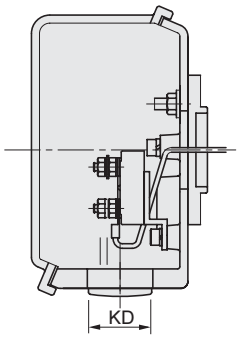	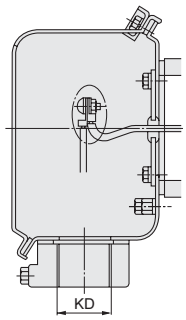	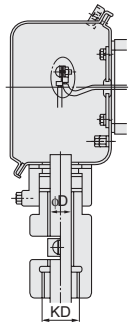	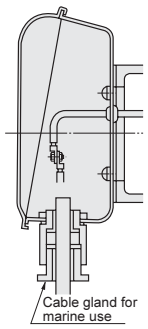

Motor			Standard Model	Option							
				Conduit Tube Type		Packing Type with Thread Conduit Joint				Cable Gland for Marine Use	
Capacity [kW]		P	KD	Standard Size KD	Available Size KD	Standard Size		Available Size		Standard Size	
3-Phase Motor	AF Motor					Thread KD	Cable Dia. φD	Thread KD	Cable Dia. φD	Thread KD	Cable Dia. φD
0.1	-	4	M25	16 (PF1/2)	16 (PF1/2) 22 (PF3/4) 28 (PF1) 36 (PF1 1/4) Note:1)	22 (PF3/4)	12.5	22 (PF3/4) 28 (PF1) 36 (PF1 1/4)	10.0~16.5 12.0~19.5 15.5~23.5	20c	15a~c 20a~c 25a~c
0.2	0.1	4	M25								
0.25	-	4	M25								
0.4	0.2	4	M25								
0.55	-	4	M25	22 (PF3/4)							
0.75	0.4	4	M25								
1.1	-	4	M25								
1.5	0.75	4	M25								
2.2	1.5	4	M25								
3.0	-	4	M25			28 (PF1)	14.5				
3.7	2.2	4	M25								
5.5	3.7	4	M32	28 (PF1)						25c	
7.5	5.5	4	M32		22 (PF3/4) 28 (PF1) 36 (PF1 1/4) 42 (PF1 1/2)		17.5	22 (PF3/4) 28 (PF1) 36 (PF1 1/4) 42 (PF1 1/2)	12.0~16.5 12.0~18.7 15.5~22.7 17.5~27.0		20a~c 25a~c 30a~c
11	7.5	4	M32	36 (PF1 1/4)		36 (PF1 1/4)	19.5			30a	
15	11	4	M32			42 (PF1 1/2)	24				
15	-	6	M40		28 (PF1) 36 (PF1 1/4) 42 (PF1 1/2) 54 (PF2) 70 (PF2 1/2)			28 (PF1) 36 (PF1 1/4) 42 (PF1 1/2) 54 (PF2) 70 (PF2 1/2) Note:2)	13.5~19.0 16.0~23.0 19.5~28.0 23.0~35.7 29.0~45.0	35a	25a~c 30a~c 35a~c
18.5	-	4	M40								
18.5	-	6	M40								
22	15	4	M40								
22	15	6	M40								
30	22	4	M40	54 (PF2)		54 (PF2)	29				
30	22	6	M50								
37	30	4	M50				34				
37	30	6	M50								
45	37	4	M50	70 (PF2 1/2)		70 (PF2 1/2)	44	36 (PF1 1/4) 42 (PF1 1/2) 54 (PF2) 70 (PF2 1/2) 82 (PF3) 92 (PF3 1/2)	20.0~22.7 22.5~29.7 26.8~38.0 38.1~47.0 47.1~53.7 52.5~57.0	55a	35a~c 45a~c 55a~c
45	37	6	M50		36 (PF1 1/4) 42 (PF1 1/2) 54 (PF2) 70 (PF2 1/2) 82 (PF3) 92 (PF3 1/2)						
55	45	4	M50								
55	-	6	M63								

The size of the external lead wire opening of the standard Sumitomo motor has been listed.

Note: 1. In case of 0.4kW × 4Pole below(0.2kW × 4Pole below when AF motor for Inverter), Except for STD KD(PF1/2), dimensions of a terminal box become special.
2. For the increased safety explosion-proof 45kwx4pole motor, the KD dimensions become PF11/4 (36) - PF31/2(92).
3. Unless otherwise specifically requested, the outdoor type, increased safety explosion-proof motor and for maritime use will be manufactured to the standard dimensions specified above.
4. Terminal Box below 0.4kW × 4P is plastic. Steel is also available. Please consult us.

Terminal Box Specifications

3. Mounting Direction of Terminal Box

● The terminal box mounting direction can be changed in units of 90°, but specify the direction according to the following table when placing an order.

Cable port direction	Terminal box mounting position (As viewed from output shaft with motor being horizontal)	
	Left side (N33)	Right side (N34)
Type A (N3A)	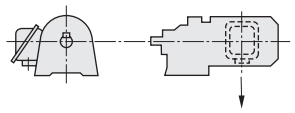	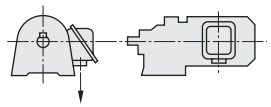
Type B (N3B)	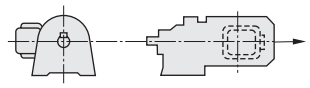	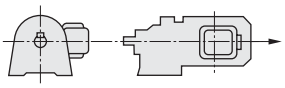
Type C (N3C)	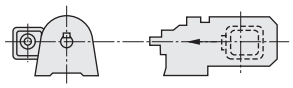	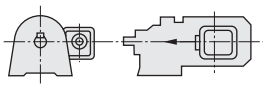
Type D (N3D)	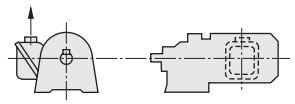	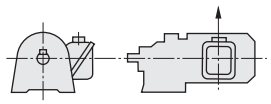

Cable port direction	Terminal box mounting position (As viewed from output shaft with motor being horizontal)	
	Top (N35)	Down (N36)
Type A (N3A)	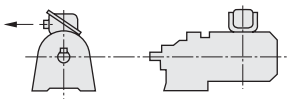	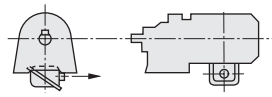
Type B (N3B)	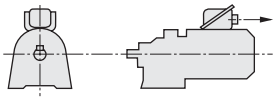	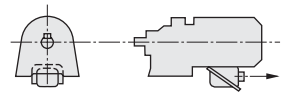
Type C (N3C)	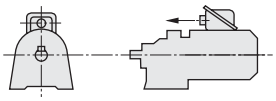	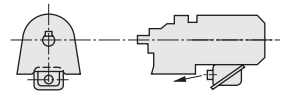
Type D (N3D)	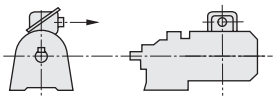	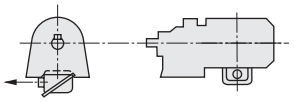

Note: Arrow indicates direction of lead wires out of terminal box.

4. Standard Position of Terminal Box and Direction of Lead Wires.

	Horizontal type (Horizontal Slow Speed Shaft)				Vertical type (Vertical Slow Speed Shaft Down)	
	Standard Motor		Brake Motor		Standard Motor	Brake Motor
	3-Phase	AF Motor	3-Phase	AF Motor	3-Phase	AF Motor
Terminal Box Mounting Position	Left side	Left side	Left side	Left side	Left side	Left side
Cable port direction	A	A	A	A	A	A

5. Details of Motor Fan Cover Mounting

Refer to the dimensions FA or FB shown below when designing a gearmotor mounting space.
(1) Dimensions FA:……Dimensions necessary to remove the fan cover or brake cover without removing the motor from the equipment.
(2) Dimensions FB:……Minimum space required for adequate ventilation

Note: 1. It is necessary to remove the gearmotor from the equipment when removing the fan or brake cover.
2. The minimum space when the wall at the back of the motor fan is closed tightly.
3. AF(Inverter) of 30kw or above are a differently ventilated type.

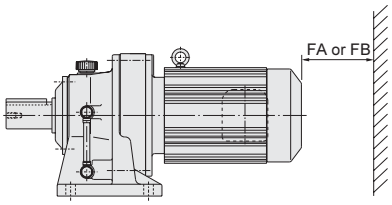

Dimension of FA and FB

[mm]

Specification / Capacity	Without Brake				With Brake			
	3-Phase Motor		AF Motor		3-Phase Motor		AF Motor	
	FA	FB	FA	FB	FA	FB	FA	FB
0.1kW × 4P	-	-	48	20	49	-	61	20
0.2kW × 4P	48	20	48	20	61	20	61	20
0.25kW × 4P	48	20	-	-	61	20	-	-
0.4kW × 4P	48	20	49	20	61	20	93	20
0.55kW × 4P	49	20	-	-	93	20	-	-
0.75kW × 4P	49	20	52	20	93	20	115	20
1.1kW × 4P	52	20	-	-	115	20	-	-
1.5kW × 4P	52	20	56	20	115	20	121	20
2.2kW × 4P	56	20	60	20	121	20	132	20
3.0kW × 4P	60	20	-	-	132	20	-	-
3.7kW × 4P	60	20	60	20	132	20	132	20
5.5kW × 4P	60	20	75	25	132	20	170	25
7.5kW × 4P	75	25	75	25	170	25	170	25
11kW × 4P	75	25	130	30	170	25	220	30
15kW × 4P	130	30	155	30	220	30	367	30
18.5kW × 4P	155	30	170	30	367	30	370	30
22kW × 4P	155	30	170	30	367	30	370	30
30kW × 4P	170	30	140	30	370	30	295	30
37kW × 4P	230	30	140	30	445	30	295	30

6. Dimensions of Terminal Box Mounting Centers

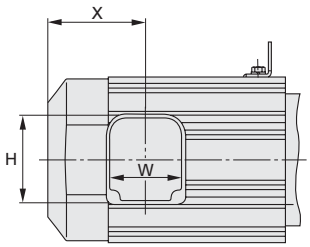

[mm]

Specification / Capacity	Without Brake						With Brake					
	3-Phase Motor			AF Motor			3-Phase Motor			AF Motor		
	X	W	H	X	W	H	X	W	H	X	W	H
0.1kW × 4P	35	125	126	59	125	126	70	125	126	91	125	126
0.2kW × 4P	59	125	126	59	125	126	91	125	126	91	125	126
0.25kW × 4P	59	125	126	-	-	-	91	125	126	-	-	-
0.4kW × 4P	59	125	126	97	125	126	91	125	126	140	125	126
0.55kW × 4P	97	125	126	-	-	-	140	125	126	-	-	-
0.75kW × 4P	97	125	126	100	125	126	140	125	126	162	125	126
1.1kW × 4P	100	125	126	-	-	-	162	125	126	-	-	-
1.5kW × 4P	100	125	126	105	125	126	162	125	126	168	125	126
2.2kW × 4P	105	125	126	127	125	126	168	125	126	199	125	126
3.0kW × 4P	127	125	126	-	-	-	199	125	126	-	-	-
3.7kW × 4P	127	125	126	127	125	126	199	125	126	199	125	126
5.5kW × 4P	127	125	126	143	170	175	199	125	126	238	170	175
7.5kW × 4P	143	170	175	143	170	175	238	170	175	238	170	175
11kW × 4P	143	170	175	295	170	175	238	170	175	385	170	175
15kW × 4P	295	170	175	340	229	223	385	170	175	550	229	223
18.5kW × 4P	340	229	223	340	229	223	550	229	223	550	229	223
22kW × 4P	340	229	223	340	229	223	550	229	223	550	229	223
30kW × 4P	340	229	223	460	229	223	550	229	223	712	229	223
37kW × 4P	430	229	223	460	229	223	645	229	223	712	229	223
45kW × 4P	430	229	223	-	-	-	-	-	-	-	-	-
55kW × 4P	465	229	223	-	-	-	-	-	-	-	-	-

Characteristics for Global Motor

Table F-27 Characteristics of Non-Explosion Proof Motors

(1) 200V Class

Motor Frame Size	Pole	4P														
	Power	220V-50Hz					230V-50Hz					220V-60Hz				
	Output power [kW]	Rated Current	Torque max.[%]	Starting Torque [%]	Starting Current [A]	Speed [r/min]	Rated Current	Torque max.[%]	Starting Torque [%]	Starting Current [A]	Speed [r/min]	Rated Current	Torque max.[%]	Starting Torque [%]	Starting Current [A]	Speed [r/min]
F-63S	0.10	0.60	235	230	2.3	1420	0.62	261	261	2.3	1430	0.53	220	202	2.1	1700
F-63M	0.20	1.0	210	206	3.8	1410	1.0	231	236	4.0	1420	0.95	186	191	3.5	1690
F-63M	0.25	1.2	182	195	4.2	1380	1.2	202	222	4.4	1400	1.2	153	161	3.7	1640
F-71M	0.40	2.0	200	201	7.3	1410	2.1	221	229	7.8	1400	1.8	188	185	6.6	1680
F-80S	0.55	2.4	182	206	9.2	1410	2.4	200	225	9.6	1420	2.3	164	166	8.6	1680
F-80M	0.75	3.3	211	193	13.1	1420	3.3	217	212	13.8	1430	3.1	189	180	12.3	1720
F-90S	1.1	4.7	215	200	21.7	1420	4.6	236	223	22.8	1420	4.4	189	170	19.9	1690
F-90L	1.5	6.1	204	192	27.9	1420	6.0	226	212	28.9	1430	5.7	196	175	25.5	1700
F-100L	2.2	8.7	203	213	42.1	1420	8.3	231	255	45.0	1430	8.1	207	185	38.0	1690
F-112S	3.0	11.2	205	213	61	1420	11.1	224	237	64	1420	10.8	175	155	54	1720
F-112M	3.7	13.4	219	218	80	1410	17.8	308	340	114	1440	12.9	207	178	70	1700

(2) 400V Class

Motor Frame Size	Pole	4P														
	Power	380V-50Hz					400V-50Hz					415V-50Hz				
	Output [kW]	Rated Current	Torque max.[%]	Starting Torque [%]	Starting Current [A]	Speed [r/min]	Rated Current	Torque max.[%]	Starting Torque [%]	Starting Current [A]	Speed [r/min]	Rated Current	Torque max.[%]	Starting Torque [%]	Starting Current [A]	Speed [r/min]
F-63S	0.10	0.34	235	230	1.3	1420	0.36	261	261	1.3	1430	0.37	281	286	1.4	1430
F-63M	0.20	0.61	210	206	2.2	1410	0.62	233	236	2.3	1420	0.63	251	260	2.4	1420
F-63M	0.25	0.70	182	195	2.4	1380	0.70	202	222	2.5	1380	0.70	220	242	2.3	1400
F-71M	0.40	1.2	200	201	4.2	1410	1.2	221	229	4.5	1420	1.3	236	250	4.7	1420
F-80S	0.55	1.4	182	206	5.3	1410	1.4	200	225	5.5	1420	1.4	218	248	5.8	1420
F-80M	0.75	1.9	211	193	7.6	1420	1.9	219	215	8.0	1430	2.0	237	232	8.4	1440
F-90S	1.1	2.7	215	200	12.5	1420	2.7	236	223	13.2	1420	2.7	256	243	14.3	1430
F-90L	1.5	3.5	204	192	16.1	1420	3.5	228	224	17.1	1430	3.6	242	236	17.8	1430
F-100L	2.2	5.0	203	213	24.3	1420	4.8	231	255	26.0	1430	5.0	240	263	26.8	1430
F-112S	3.0	6.5	205	213	35.1	1420	6.4	224	237	37.0	1420	6.2	241	255	35.7	1420
F-112M	3.7	7.8	219	218	45.9	1410	7.5	231	236	46.9	1420	7.7	259	269	51	1430
F-132S	5.5	11.3	215	227	69	1410	11.1	237	256	73	1420	11.0	256	281	76	1430
F-132M	7.5	15.0	228	232	93	1450	14.8	252	261	99	1450	14.8	270	284	103	1450
F-160M	11.0	21.5	231	250	139	1450	21.0	256	282	147	1450	20.8	274	308	154	1450
G-160L	15.0	27.7	241	235	170	1460	26.6	271	265	180	1470	26.0	294	289	188	1470
F-180MG	18.5	34.5	262	277	245	1450	33.1	293	312	261	1450	32.3	319	340	272	1460
F-180MG	22.0	40.8	252	269	280	1450	39.3	281	302	297	1450	38.9	304	328	310	1450
F-180L	30.0	56	218	236	325	1450	54	244	265	345	1450	54	264	286	361	1450
F-200L	37.0	70	256	285	479	1450	66	256	287	446	1460	65	277	311	467	1460
F-200L	45.0	84	251	286	564	1440	81	252	288	538	1450	80	271	310	559	1450

Motor Frame Size	Pole	4P				
	Power	440V-60Hz				
	Output [kW]	Rated Current	Torque max.[%]	Starting Torque [%]	Starting Current [A]	Speed [r/min]
F-63S	0.10	0.32	300	289	1.4	1730
F-63M	0.20	0.54	268	266	2.4	1720
F-63M	0.25	0.60	232	251	2.6	1700
F-71M	0.40	1.0	256	262	4.6	1730
F-80S	0.55	1.2	224	240	5.9	1720
F-80M	0.75	1.7	247	242	8.4	1740
F-90S	1.1	2.3	257	260	13.6	1720
F-90L	1.5	3.0	250	243	17.5	1740
F-100L	2.2	4.2	248	260	26.2	1720
F-112S	3.0	5.5	238	225	37.0	1720
F-112M	3.7	6.6	246	238	46.4	1720
F-132S	5.5	9.6	254	263	73	1720
F-132M	7.5	12.8	267	271	98	1750
F-160M	11.0	18.4	270	296	145	1750
G-160L	15.0	23.8	275	280	175	1770
F-180MG	18.5	29.6	295	324	252	1750
F-180MG	22.0	38.8	199	216	225	1720
F-180L	30.0	47.8	249	280	334	1740
F-200L	37.0	59	259	306	429	1730
F-200L	45.0	72	255	311	516	1730

Note: 1. The characteristics of the 4-pole motor with built-in brake is the same as shown in Table F-27 (1) and (2).
2. For the electrical current of the brakes, refer to Table F-31 on Page F-40.
3. Consult us for confirmed values. Values in the above table are subject to change without notice.

Table F-28 Characteristics of AF Motor for Inverters

Motor Frame Size	Pole	4P							
	Power	220V-60Hz				380V-60Hz			
	Output [kW]	Frequency [Hz]	Voltage [V]	Rated Current	Speed [r/min]	Frequency [Hz]	Voltage [V]	Rated Current	Speed [r/min]
FA-63S	0.10	60	220	0.85	1765	60	380	0.38	1755
		6.0	34.0	0.75	120	6.0	68	0.37	125
FA-63M	0.20	60	220	1.6	1760	60	380	0.69	1750
		6.0	34.0	1.5	130	6.0	68	0.75	130
FA-71M	0.40	60	220	2.4	1745	60	380	1.1	1725
		6.0	35.0	2.2	115	6.0	70	1.1	115
FA-80M	0.75	60	220	4.0	1755	60	380	1.9	1735
		6.0	31.0	3.9	120	6.0	62	1.9	120
FA-90L	1.5	60	220	6.4	1735	60	380	3.3	1705
		6.0	33.0	6.5	105	6.0	66	3.2	110
FA-100L	2.2	60	220	9.1	1755	60	380	4.7	1740
		6.0	31.0	9.3	140	6.0	62	4.6	135
FA-112M	3.7	60	220	14.0	1750	60	380	7.7	1730
		6.0	30.0	14.8	125	6.0	60	7.4	120
FA-132S	5.5	60	220	20.2	1760	60	380	11.2	1745
		6.0	30.0	21.3	135	6.0	60	10.7	130
FA-132M	7.5	60	220	27.4	1765	60	380	15.2	1750
		6.0	30.0	28.2	145	6.0	60	14.1	145
G-160L	11.0	60	220	38.5	1770	60	380	21.7	1755
		6.0	32.0	39.6	155	6.0	64	19.7	155
F-180MG	15.0	60	220	53	1780	60	380	30.3	1770
		6.0	32.0	53	165	6.0	64	26.3	165
F-180L	22.0	60	220	77	1775	60	380	44.5	1765
		6.0	32.0	79	160	6.0	64	39.4	160
BF-200L	30.0	60	220	100	1780	60	380	58	1770
		6.0	32.0	101	165	6.0	64	51	165
BF-200L	37.0	60	220	123	1775	60	380	72	1765
		6.0	30.0	123	165	6.0	64	62	165

Motor Frame Size	Pole	4P			
	Power	415V-60Hz			
	Output [kW]	Frequency [Hz]	Voltage [V]	Rated Current	Speed [r/min]
FA-63S	0.10	60	415	0.40	1760
		6.0	68	0.37	125
FA-63M	0.20	60	415	0.75	1760
		6.0	68	0.75	130
FA-71M	0.40	60	415	1.1	1740
		6.0	70	1.1	115
FA-80M	0.75	60	415	1.9	1745
		6.0	62	1.9	120
FA-90L	1.5	60	415	3.1	1725
		6.0	66	3.2	110
FA-100L	2.2	60	415	4.4	1750
		6.0	62	4.6	135
FA-112M	3.7	60	415	7.2	1745
		6.0	60	7.4	120
FA-132S	5.5	60	415	10.5	1755
		6.0	60	10.7	130
FA-132M	7.5	60	415	14.2	1760
		6.0	60	14.1	145
G-160L	11.0	60	415	20.1	1765
		6.0	64	19.7	155
F-180MG	15.0	60	415	27.8	1775
		6.0	64	26.3	165
F-180L	22.0	60	415	40.7	1770
		6.0	64	39.4	160
BF-200L	30.0	60	415	53	1775
		6.0	64	51	165
BF-200L	37.0	60	415	65	1775
		6.0	64	62	165

Note: Consult us for confirmed values. Values in the above table are subject to change without notice.

Characteristics for Japan Standard Motor

Table F-29 Characteristics of 6P Motors

(1) 200V Class

Motor Frame Size	Pole	6P														
	Power	200V-50Hz					200V-60Hz					220V-60Hz				
	Output power [kW]	Rated Current	Torque max.[%]	Starting Torque [%]	Starting Current [A]	Speed [r/min]	Rated Current	Torque max.[%]	Starting Torque [%]	Starting Current [A]	Speed [r/min]	Rated Current	Torque max.[%]	Starting Torque [%]	Starting Current [A]	Speed [r/min]
F-63M	0.1	0.72	213	200	2.4	940	0.64	194	172	2.2	1120	0.65	240	221	2.4	1140
F-71M	0.2	1.6	296	289	5.8	940	1.3	260	243	5.3	1140	1.4	325	312	6.0	1150
F-71M	0.25	1.7	232	226	5.8	920	1.4	205	190	5.3	1120	1.5	257	247	6.0	1130
F-80M	0.40	2.6	240	235	9.3	930	2.3	215	199	8.7	1100	2.3	265	256	9.7	1130
F-80ML	0.55	3.4	245	257	12.0	920	3.0	220	218	11.1	1100	3.0	274	282	12.4	1120
F-90L	0.75	4.5	240	228	17.8	930	4.0	212	196	16.3	1110	4.0	265	254	18.4	1130
F-90LL	1.1	6.0	260	265	25.3	930	5.3	222	216	23.1	1110	5.2	278	280	26.0	1130
F-100L	1.5	7.7	247	244	36.2	940	7.0	202	191	32.5	1120	6.8	261	247	36.6	1140
F-112M	2.2	(11.1)	(248)	(222)	(62.3)	(950)	(9.9)	(205)	(175)	(54.5)	(1140)	(9.5)	(263)	(226)	(61.5)	(1150)
F-132SS	3.0	(14.9)	(242)	(217)	(82.7)	(950)	(13.4)	(200)	(173)	(72.4)	(1140)	(12.8)	(257)	(223)	(81.7)	(1150)
F-132S	3.7	(17.7)	(235)	(220)	(98.1)	(950)	(16.3)	(190)	(170)	(85.1)	(1140)	(15.3)	(239)	(221)	(96.2)	(1150)
F-132M	5.5	(25.8)	(239)	(232)	(149)	(960)	(23.7)	(190)	(175)	(126)	(1150)	(22.2)	(246)	(228)	(143)	(1160)
F-160M	7.5	30.3	246	254	174	980	28.7	197	213	150	1180	26.8	251	272	165	1180
F-160L	11.0	43.4	245	263	250	970	41.3	194	219	216	1170	38.4	247	280	244	1170
F-180MG	15.0	55	271	232	358	980	55	222	195	308	1180	49.9	276	246	344	1180
F-180L	18.5	71	311	274	500	990	66	258	234	430	1180	62	321	293	480	1190
F-180L	22.0	83	261	230	500	990	79	216	196	430	1180	73	269	246	480	1180
F-200L	30.0	111	269	267	694	960	106	221	228	598	1180	98	275	287	668	1180
F-200L	37.0	137	289	293	912	980	130	237	251	784	1170	120	296	314	878	1170
F-225S	45.0	163	238	244	962	980	158	195	209	818	1170	144	242	262	914	1180
F-250S	55	198	231	242	1146	980	194	188	208	970	1170	176	234	260	1084	1180
F-250M	75	269	271	296	1830	980	261	221	255	1536	1170	239	274	320	1718	1180

(2) 400V Class

Motor Frame Size	Pole	6P														
	Power	400V-50Hz					400V-60Hz					440V-60Hz				
	Output [kW]	Rated Current	Torque max.[%]	Starting Torque [%]	Starting Current [A]	Speed [r/min]	Rated Current	Torque max.[%]	Starting Torque [%]	Starting Current [A]	Speed [r/min]	Rated Current	Torque max.[%]	Starting Torque [%]	Starting Current [A]	Speed [r/min]
F-63M	0.10	0.36	213	200	1.2	940	0.32	194	172	1.1	1120	0.33	240	221	1.2	1140
F-71M	0.20	0.81	296	289	2.9	940	0.64	260	243	2.7	1140	0.69	325	312	3.0	1150
F-71M	0.25	0.87	232	226	2.9	920	0.72	205	190	2.7	1120	0.75	257	247	3.0	1130
F-80M	0.40	1.3	240	235	4.7	930	1.2	215	199	4.4	1100	1.2	265	256	4.9	1130
F-80ML	0.55	1.7	245	257	6.0	920	1.5	220	218	5.6	1100	1.5	274	282	6.2	1120
F-90L	0.75	2.3	240	228	8.9	930	2.0	212	196	8.2	1110	2.0	265	254	9.2	1130
F-90LL	1.10	3.0	260	265	12.7	930	2.7	222	216	11.6	1110	2.6	278	280	13.0	1130
F-100L	1.5	3.9	247	244	18.1	940	3.5	202	191	16.3	1120	3.4	261	247	18.3	1140
F-112M	2.2	(5.6)	(248)	(222)	(31.2)	(950)	(5.0)	(205)	(175)	(27.3)	(1140)	(4.8)	(263)	(226)	(30.75)	(1150)
F-132SS	3.0	(7.5)	(242)	(217)	(41.4)	(950)	(6.7)	(200)	(173)	(36.2)	(1140)	(6.4)	(257)	(223)	(40.85)	(1150)
F-132S	3.7	(8.9)	(235)	(220)	(49.1)	(950)	(8.2)	(190)	(170)	(42.6)	(1140)	(7.7)	(239)	(221)	(48.1)	(1150)
F-132M	5.5	(12.9)	(239)	(232)	(74)	(960)	(11.9)	(190)	(175)	(63.3)	(1150)	(11.1)	(246)	(228)	(71.7)	(1160)
F-160M	7.5	15.2	246	254	87	980	14.4	197	213	75	1180	13.4	251	272	83	1180
F-160L	11.0	21.7	245	263	125	970	20.6	194	219	108	1170	19.2	247	280	122	1170
F-180MG	15.0	27.7	271	232	179	980	27.3	222	195	154	1180	25.0	276	246	172	1180
F-180L	18.5	35.6	311	274	250	990	33.2	258	234	215	1180	31.1	321	293	240	1190
F-180L	22.0	41.4	261	230	250	990	39.5	216	196	215	1180	36.3	269	246	240	1180
F-200L	30.0	56	269	267	347	960	53	221	228	299	1180	48.8	275	287	334	1180
F-200L	37.0	68	289	293	456	980	65	237	251	392	1170	60	296	314	439	1170
F-225S	45.0	82	238	244	481	980	79	195	209	409	1170	72	242	262	457	1180
F-250S	55	99	231	242	573	980	97	188	208	485	1170	88	234	260	542	1180
F-250M	75	135	271	296	915	980	131	221	255	768	1170	119	274	266	859	1180

Note: 1. Values in parenthesis in the above table is designed value. Consult us for detailed values.
2. Consult us for confirmed values. Values in the above table are subject to change without notice.

Characteristics for Japan Standard Motor

Table F-30 Characteristics of Increased Safety Motors

(1) 200V Class

Motor Frame Size	Pole	4P														
	Power	200V-50Hz					200V-60Hz					220V-60Hz				
	Output [kW]	Rated Current	Torque max.[%]	Starting Torque [%]	Starting Current [A]	Speed [r/min]	Rated Current	Torque max.[%]	Starting Torque [%]	Starting Current [A]	Speed [r/min]	Rated Current	Torque max.[%]	Starting Torque [%]	Starting Current [A]	Speed [r/min]
F-63S	0.10	0.69	265	281	2.7	1420	0.60	236	245	2.5	1690	0.62	285	297	2.8	1720
F-63M	0.20	1.2	232	233	4.6	1410	1.1	210	207	4.2	1690	1.1	254	250	4.8	1710
F-71M	0.40	2.3	237	237	9.1	1380	2.0	210	210	8.3	1650	2.0	257	257	9.4	1680
F-80M	0.75	3.9	234	215	16.0	1420	3.4	211	190	15.1	1720	3.3	253	242	16.8	1740
F-90L	1.5	7.0	242	224	34.1	1430	6.3	205	192	31.2	1710	6.0	250	243	34.9	1730
F-100L	2.2	9.6	268	255	52	1430	8.8	229	204	46.9	1700	8.3	282	260	52	1720
F-112M	3.7	15.1	262	236	94	1430	14.2	216	188	83	1710	13.1	264	238	93	1730
F-132S	5.5	22.9	313	286	158	1420	21.1	264	229	139	1700	19.7	325	291	156	1720
F-132M	7.5	29.5	274	261	198	1450	27.4	240	224	175	1750	25.6	292	271	195	1760
F-160M	11.0	41.9	305	297	302	1450	39.5	263	247	265	1740	36.7	322	309	296	1750
G-160L	15.0	53	271	265	360	1460	52	220	222	313	1750	48	275	280	349	1760
F-180LG	18.5	66	293	312	522	1480	65	236	257	450	1780	59	295	324	504	1780
F-180LG	22.0	79	246	262	522	1480	78	199	216	450	1770	70	248	272	504	1780
F-200LG	30.0	105	245	281	706	1470	105	195	231	610	1760	94	245	292	684	1770
F-200L	37.0	128	245	289	857	1470	128	195	241	742	1750	115	245	305	832	1760
F-225S	45.0	154	243	228	985	1470	154	198	193	844	1770	139	246	241	943	1770
F-225S	55	186	267	261	1328	1470	186	217	225	1130	1770	168	269	280	1261	1770

Motor Frame Size	Pole	6P														
	Power	200V-50Hz					200V-60Hz					220V-60Hz				
	Output [kW]	Rated Current	Torque max.[%]	Starting Torque [%]	Starting Current [A]	Speed [r/min]	Rated Current	Torque max.[%]	Starting Torque [%]	Starting Current [A]	Speed [r/min]	Rated Current	Torque max.[%]	Starting Torque [%]	Starting Current [A]	Speed [r/min]
F-180LG	15.0	56	271	232	358	980	55	222	195	308	1180	50	276	246	344	1180
F-180L	18.5	72	311	274	500	990	67	258	234	430	1180	63	321	293	480	1190
F-180L	22.0	84	261	230	500	990	79	216	196	430	1180	73	269	246	480	1180
F-200L	30.0	107	252	253	652	980	107	204	212	558	1170	97	256	287	668	1170
F-225S	37.0	136	239	241	793	980	132	196	206	678	1170	121	243	314	878	1180
F-225S	45.0	163	235	245	946	970	163	190	208	809	1170	146	237	262	914	1170
F-250S	55	199	242	257	1184	970	198	196	219	1011	1170	178	244	260	1084	1180

(2) 400V Class

Motor Frame Size	Pole	4P														
	Power	400V-50Hz					400V-60Hz					440V-60Hz				
	Output [kW]	Rated Current	Torque max.[%]	Starting Torque [%]	Starting Current [A]	Speed [r/min]	Rated Current	Torque max.[%]	Starting Torque [%]	Starting Current [A]	Speed [r/min]	Rated Current	Torque max.[%]	Starting Torque [%]	Starting Current [A]	Speed [r/min]
F-63S	0.10	0.36	255	261	1.3	1420	0.31	233	224	1.2	1700	0.32	277	289	1.4	1720
F-63M	0.20	0.62	233	236	2.3	1410	0.54	212	202	2.1	1690	0.54	257	266	2.4	1710
F-71M	0.40	1.2	229	229	4.5	1390	1.0	205	201	4.1	1650	1.0	249	262	4.6	1680
F-80M	0.75	1.9	234	215	8.0	1420	1.7	211	190	7.6	1720	1.7	253	242	8.4	1740
F-90L	1.5	3.5	242	224	17.1	1430	3.1	205	192	15.6	1710	3.0	250	243	17.5	1730
F-100L	2.2	4.8	268	255	26.0	1430	4.4	229	204	23.5	1700	4.2	282	260	26.2	1720
F-112M	3.7	7.5	262	236	46.9	1430	7.1	216	188	41.4	1710	6.6	264	238	46.4	1730
F-132S	5.5	11.4	313	286	79	1420	10.5	264	229	70	1700	9.9	325	291	78	1720
F-132M	7.5	14.8	274	261	99	1450	13.7	240	224	88	1750	12.8	292	271	98	1760
F-160M	11.0	21.0	305	297	151	1450	19.7	263	247	133	1740	18.3	322	309	148	1750
G-160L	15.0	26.8	271	265	180	1460	26.1	220	222	157	1750	23.8	275	280	175	1760
F-180LG	18.5	33.1	293	312	261	1480	32.3	236	257	225	1780	29.6	295	324	252	1780
F-180LG	22.0	39.3	246	262	261	1480	38.8	199	216	225	1770	35.1	248	272	252	1780
F-200LG	30.0	52	245	281	353	1470	53	195	231	305	1760	47.2	245	292	342	1770
F-200L	37.0	64	245	289	429	1470	64	195	241	371	1750	58	245	305	416	1760
F-225S	45.0	77	243	222	492	1470	77	198	193	422	1770	70	246	241	471	1770
F-225S	55	93	267	261	664	1470	93	217	225	565	1770	84	269	280	630	1770

Motor Frame Size	Pole	6P														
	Power	400V-50Hz					400V-60Hz					440V-60Hz				
	Output [kW]	Rated Current	Torque max.[%]	Starting Torque [%]	Starting Current [A]	Speed [r/min]	Rated Current	Torque max.[%]	Starting Torque [%]	Starting Current [A]	Speed [r/min]	Rated Current	Torque max.[%]	Starting Torque [%]	Starting Current [A]	Speed [r/min]
F-180LG	15.0	27.9	271	232	179	980	27.3	222	195	154	1180	25.0	276	246	172	1180
F-180L	18.5	36.0	311	274	250	990	33.4	258	234	215	1180	31.3	321	293	240	1190
F-180L	22.0	41.9	261	230	250	990	39.7	216	196	215	1180	36.5	269	246	240	1180
F-200L	30.0	54	252	253	326	980	53	204	212	279	1170	48.4	256	269	313	1170
F-225S	37.0	68	239	241	396	980	66	196	206	339	1170	60	243	258	379	1180
F-225S	45.0	81	235	245	473	970	81	190	208	404	1170	73	237	261	453	1170
F-250S	55	99	242	257	592	970	99	196	219	506	1170	89	244	275	566	1180

*Consult us for confirmed values. Values in the above table are subject to change without notice.

Specification and Constructions of Built-in Brake

Table F-31 Standard Brake Motor Specification

Output Power (kW × 4P)		Brake Type	Standard Torque [N · m]	Moment of Inertia (× 10^{-4}kg·m^2)	Total Braking Energy (× 10^7J)	Motion Delay Time [sec]		Brake Current [A]					
General-Purpose Motors	AF Motor					Standard Braking Action	Fast Braking Action	220V	230V	380V	400V	415V	440V
0.10		FB-01A	1.0	3.5	12	0.15~0.20	0.015~0.02	0.08	0.10	-	-	-	-
0.20/0.25	0.10	FB-02A	2.0	5.5	12			0.10	0.10	-	-	-	-
0.40	0.20	FB-05A	4.0	6.75	12	0.10~0.150	0.01~0.015	0.10	0.10	-	-	-	-
0.55/0.75	0.40	FB-1B	7.5	11.1/13	33	0.20~0.30	0.01~0.02	0.10	0.10	-	-	-	-
1.1/1.5	0.75	FB-2B	15	20.8/23.5	38			0.30	0.30	-	-	-	-
2.2	1.5	FB-3B	22	37.3	45	0.30~0.40		0.30	0.30	-	-	-	-
3.0/3.7	2.2	FB-5B	37	81/95.8	235	0.40~0.50	0.01~0.02	0.60	0.60	-	-	-	-
5.5	3.7	FB-8B	55	125	235	0.30~0.40		-	-	0.30	0.30	0.30	0.30
7.5	5.5	FB-10B	75	303	343	0.70~0.80	0.03~0.04	-	-	0.30	0.40	0.40	0.40
11	7.5	FB-15B	110	410	343	0.50~0.60		-	-	0.40	0.40	0.40	0.40
15	11	CMB-20	100	1350	304	0.40~0.50	0.10~0.15	-	-	1.6	1.6	1.7	1.8
22	15	*1 ESB-220	150	2370	201	-	0.08	0.95	*2				
30	22	*1 ESB-220	200	2572	201	-		0.95					
37	30	*1 ESB-250	250	3205	262	-	0.07	1.15					

*1. Continuous rating applies to both motor and brake of the FB, CMB and ESB brakes, but continuous operation is impossible with vertical and inverted 4P input of the ESB type brake.
*2. ESB type brake comes in a 200V class only. When the power supply is 400V, use a transformer. The capacity of the transformer is 250-300 VA and the secondary voltage is 200-220V.

- The rectifier of the ESB type brake is to be placed separately.
  Use a special DC power unit (HD-110M3) for the ESB brake. (See p.F-43 of the rectifier.) The DC power unit is made as an indoor type. Install it in a place where it will not be splashed by water.
- Nonasbestos lining is used for the FB brake.
- When greater stopping accuracy is desired or brake is used for lifter, use the fast braking action.
- Low-noise type brakes are also available as an option.
- FB, CMB, and ESB brakes need DC power supply, and the spring braking system (non-electromagnetic braking system) is adopted.

Output Voltage of Rectifier (FB Brake)

Input Voltage	Output Voltage
AC220V	DC99V
AC230V	DC104V
AC380V	DC171V
AC400V	DC180V
AC415V	DC187V
AC440V	DC198V

* Refer to p.F-43 for the output voltage of ESB brake.

Why fast braking circuit shortens braking time.

See Fig.F-33 and Fig.F-34 for differences between standard braking circuit and fast braking circuit.
See Fig.F-35 and Fig.F-36 for current curves of standard braking and fast braking.

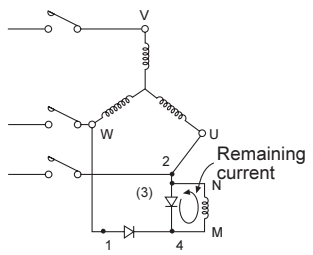

Fig. F-33 Standard Circuit

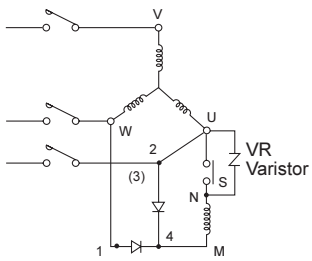

Fig. F-34 Quick Braking Circuit

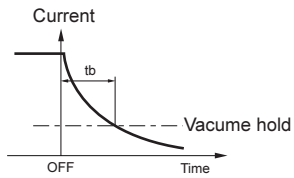

Fig. F-35 Current Curve of Standard Braking

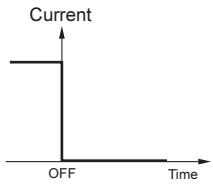

Fig. F-36 Current Curve of Quick Braking

In the standard circuit Shown in Fig.F-33, some current remains after the power is turned off due to the saved energy in the inductance L of brake coil. The current curve is shown in the Fig.F-35.
When it is connected to fast braking circuit as Show in Fig.F-34 and S is released at the same time, no current remains as there is no closed circuit with the brake coil. (See the Fig.F-36)
Therefore, it shortens the braking time by tb in the Fig.F-35. Fast braking circuit is to release all current by ON/OFF of brake coil at the same time with power ON/OFF. (VR varistor must be used to protect the rectifier and connection S.)

Circuit in the rectifier

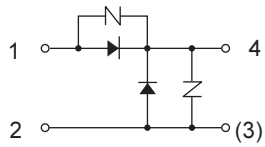

Specification and Constructions of Built-in Brake

Fig. F-37 FB-01A, 02A, 05A
(FB-01A without Fan)

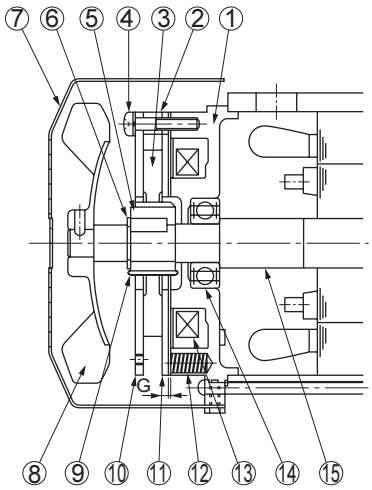

No.	Pats Name
1	Stationary core
2	Spacer
3	Brake lining
4	Assembling bolt
5	Boss
6	Shaft retaining C-ring
7	Cove
8	Fan (except for 0.1kW x 4 Poles)
9	Leaf spring
10	Fixed plate
11	Armature plate
12	Spring
13	Electromagnetic coil
14	Ball bearing
15	Motor shaft

*Brake release unit is available by option.

Fig. F-38 FB-1B, 2B, 3B

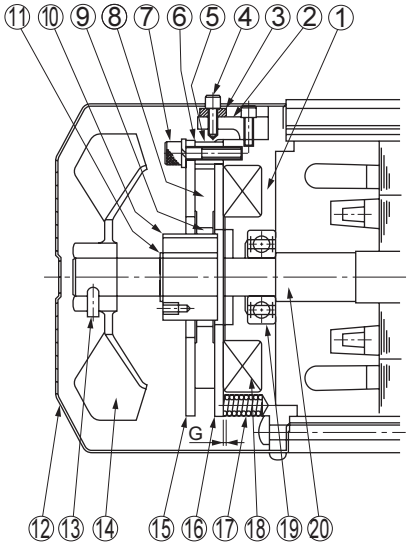

No.	Pats Name
1	Stationary core
2	Release fitting
3	Manual release protection spacer
4	Brake release bolt
5	Spacer
6	Gap adjusting shim
7	Assembling bolt
8	Brake lining
9	Leaf spring
10	Boss
11	Shaft retaining C-ring
12	Cover
13	Fan set bolt
14	Fan
15	Fixed plate
16	Armature plate
17	Spring
18	Electromagnetic coil
19	Ball bearing
20	Motor shaft

Fig. F-39 FB-5B, 8B

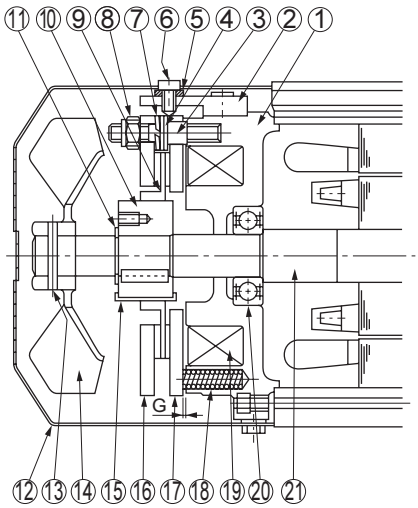

No.	Pats Name
1	Stationary core
2	Release fitting
3	Stud bolt
4	Adjusting washer
5	Manual release protection spacer
6	Brake release bolt
7	Spring washer
8	Gap adjusting nut
9	Brake lining
10	Boss
11	Shaft retaining C-ring
12	Cover
13	Spring pin
14	Fan
15	Leaf spring
16	Fixed plate
17	Armature plate
18	Spring
19	Electromagnetic coil
20	Ball bearing
21	Motor shaft

Specification and Constructions of Built-in Brake

Fig. F-40 FB-10B, 15B

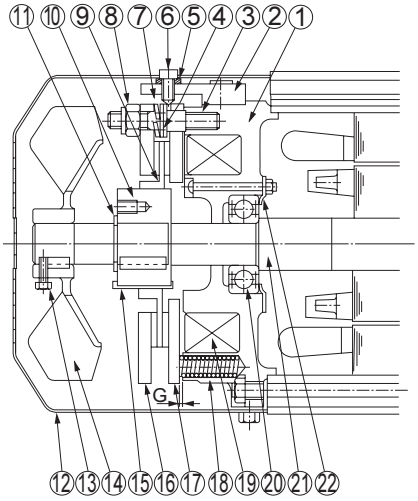

No.	Pats Name
1	Stationary core
2	Release fitting
3	Stud bolt
4	Adjusting washer
5	Manual release protection spacer
6	Brake release bolt
7	Spring washer
8	Gap adjusting nut
9	Brake lining
10	Boss
11	Shaft retaining C-ring
12	Cover
13	Fan set bolt
14	Fan
15	Leaf spring
16	Fixed plate
17	Armature plate
18	Spring
19	Electromagnetic coil
20	Ball bearing
21	Motor shaft
22	Bearing cover

Fig. F-41 CMB-20

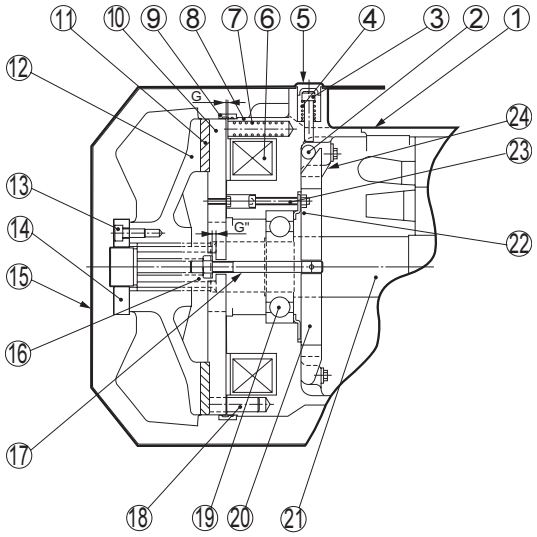

No.	Pats Name
1	Motor
2	Roller
3	Brake release bolt
4	Auxiliary spring
5	Plug
6	Electromagnetic coil
7	Spring
8	Stationary core
9	Dust seal
10	Armature plate
11	Brake lining
12	Brake wheel
13	Bolt
14	Retaining nut
15	Cover
16	U nut
17	Stud bolt
18	Retaining pin
19	Ball bearing
20	Release lever
21	Motor shaft
22	Bearing cover
23	Bearing cover bolt
24	Release lever stopper

Specification and Constructions of Built-in Brake

Fig. F-42. ESB220, 250

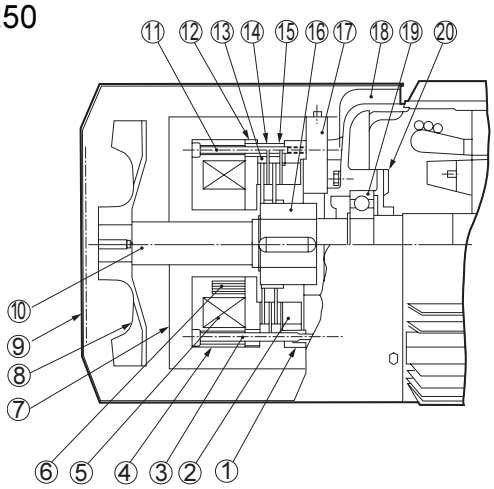

No.	Pats Name
1	Center ring
2	Gap adjusting screw
3	Assembling bolt
4	Field
5	Brake coil
6	Actuating spring
7	Brake cover (not provided for indoor type)
8	Fan
9	Fan cover
10	Shaft
11	Lock bolt
12	Armature
13	Inner disc
14	Outer disc
15	Spacer bushing
16	Hub
17	Brake adapter plate
18	Opposite drive end bracket
19	Opposite drive end bearing
20	Opposite drive end bearing cover

Power Module
Model HD-110M3

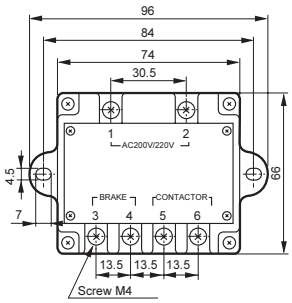

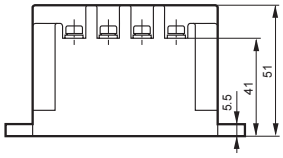

Circuit (Diagram)

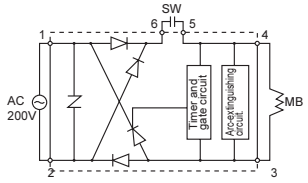

Rated input voltage: AC200/220V 50/60Hz
Maximum input voltage: AC240V 50/60Hz
Minimum input voltage: AC170V 50/60Hz

Standard output voltage
Instantaneous voltage: DC180V with AC200V input
Steady voltage: DC90V

Maximum output current: DC1.8A (Steady output)

Overexcitation time: 0.4 to 1.2 s

Insulation resistance: At 100MΩ or larger
(When measured with 1000V megohmmeter)

Insulation with stand voltage: Application of AC2000V for over 1 time

Maximum frequency
Inching (On-time 1.2 sec or less), 8 cycle/min
Constant (On-time over 1.2sec), 30 cycle/min

Ambient temperature: -20°C ~ +60°C

Note: 1. Take care to avoid dust and water.
2. Transformer is necessary for operation with 400V class power source.
The transformer should have 250 ~ 300VA rating and 200 ~ 220V secondary voltage.

Connection

3-Phase Induction Motor

	Wiring	Connection & Terminal code	Remarks
Direct Start-up	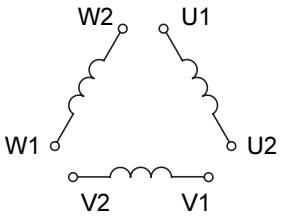	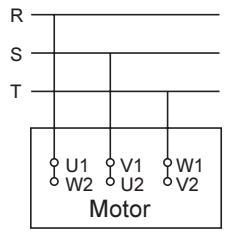	Standard motor under 0.1 - 3.7kW 200V Class 220 - 240V 50Hz 220V 60Hz
	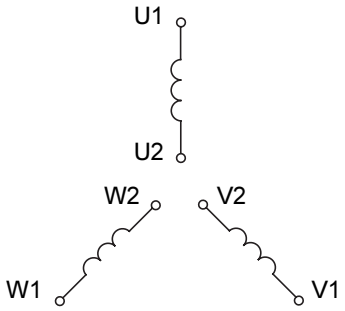	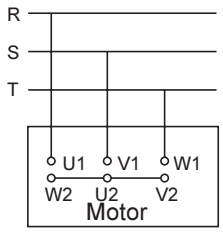	Standard motor 0.1 - 3.7kW 400V Class 380 - 420V 50Hz 440V 60Hz
⅄ - Δ Start-up	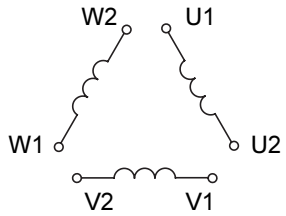	Start-up time ⅄ Connection 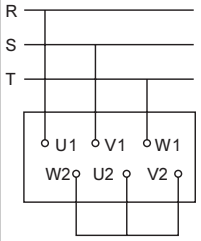 After full acceleration Δ Connection 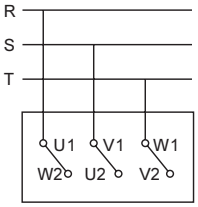	Standard Motor (1) Capacity: 5.5kW and more (2) Power Source 400V Class 380 - 420V 50Hz 400V 60Hz Note: If other than the above-mentioned voltages, please consult us.

Example of Connection

a. 3-Phase Motor

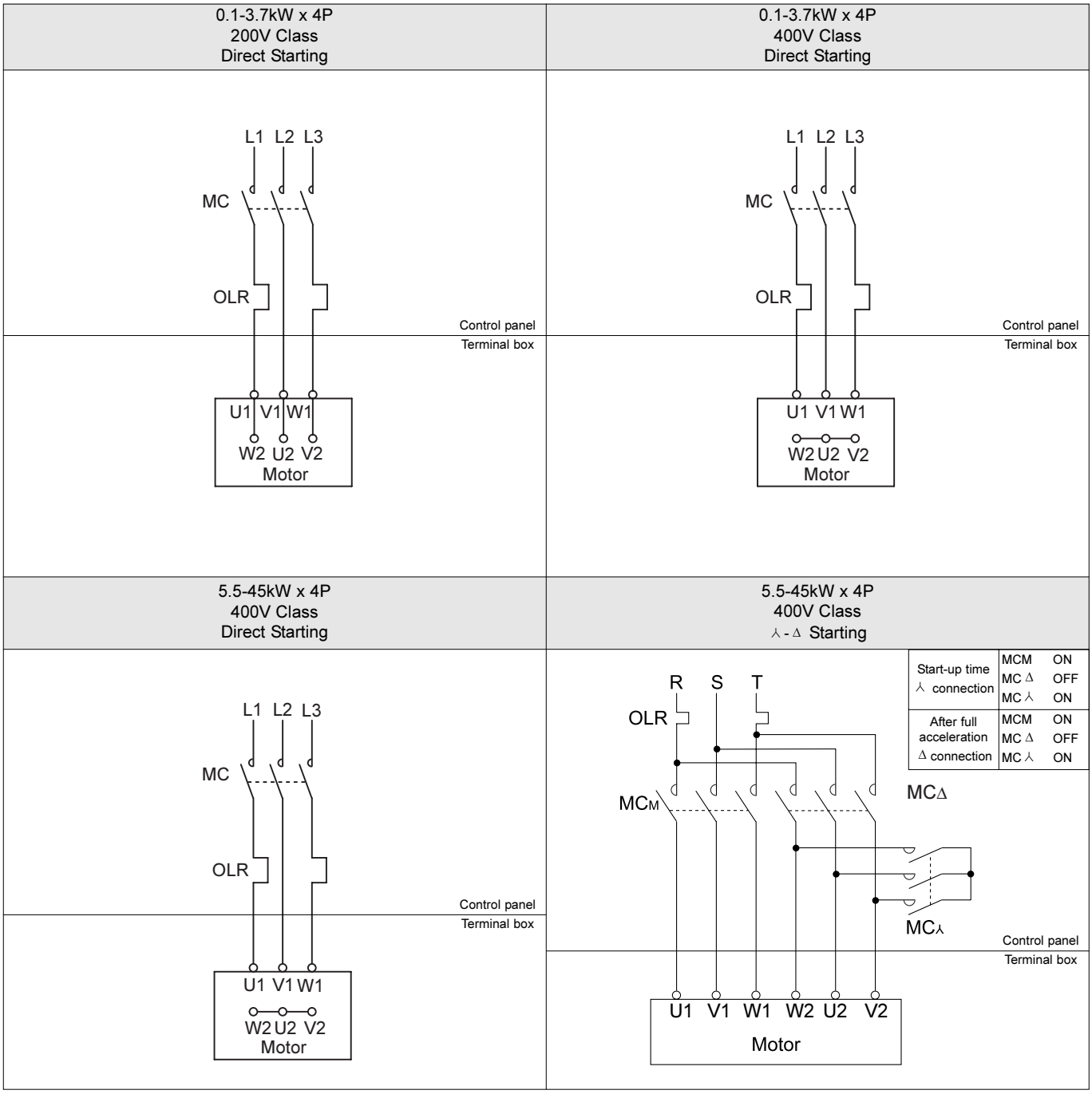

MC: Electromagnetic contactor and
OLR: Overload relay or thermal relay are not supplied by Sumitomo.

Example of Connection

b. 3-Phase Motor

Example of connection for inverter-driving

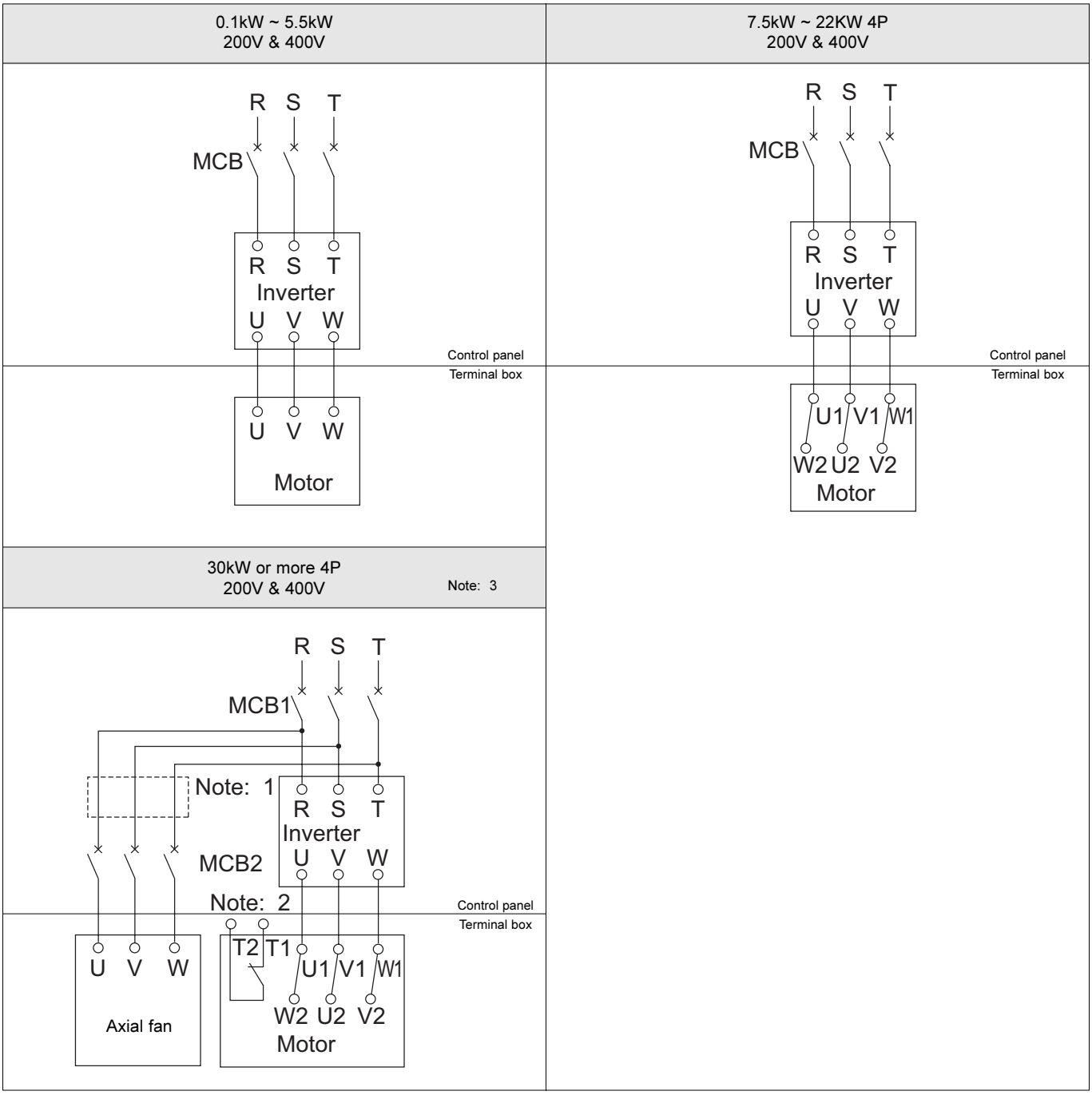

The AF motor is designed for inverter-driving. When the capacity is small, the ⅄ connection is adopted, and when it is intermediate or larger, the Δ connection is adopted.
- ⅄-Δ change-over operation by commercial power will also be possible.

Note:
1. The standard voltage of the axial fan is 3 ,200V. Provide a 400/200V transformer for the 400V power supply. Contact us for inquiries about a 400V fan.
2. Thermostat specifications (For totally enclosed separate ventilation type)
   Terminal code: T1 and T2 or P1 and P2
   Operating temperature: 135°C (Type F insulation)
   Operation: Normally closed (b contact point)
   Max. current: 24VDC; 18A; 230VAC; 13A
3. General motor of standard specification type does not include axial fan or thermostat.

c. 3-Phase Motor with FB Brake for One Way Rotation (0.1-3.7kW)

	0.1-3.7kW x 4P 200V Class Direct Starting	0.1-3.7kW x 4P 400V Class Direct Starting
Normal Braking Action	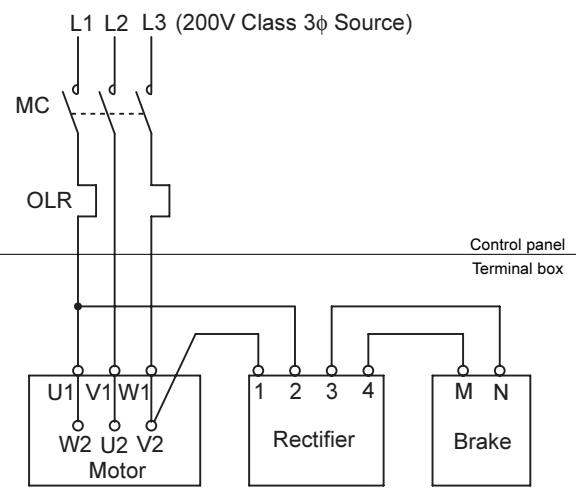	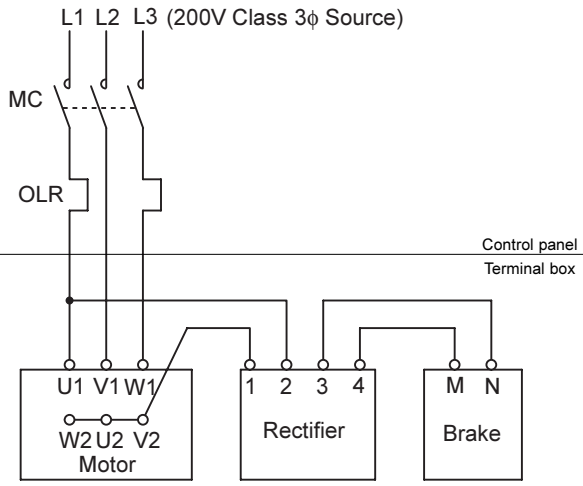
Fast Braking Action	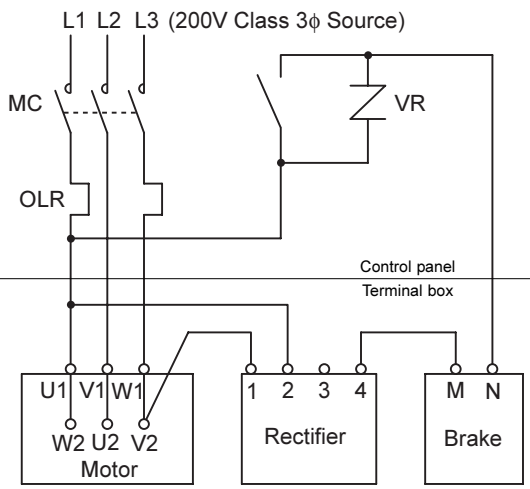	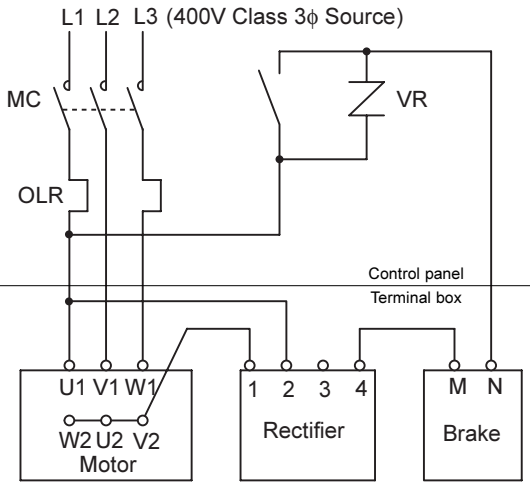

Example of Connection

d. 3-Phase Motor with FB Brake for Operating in Both Directions (0.1-3.7kW)

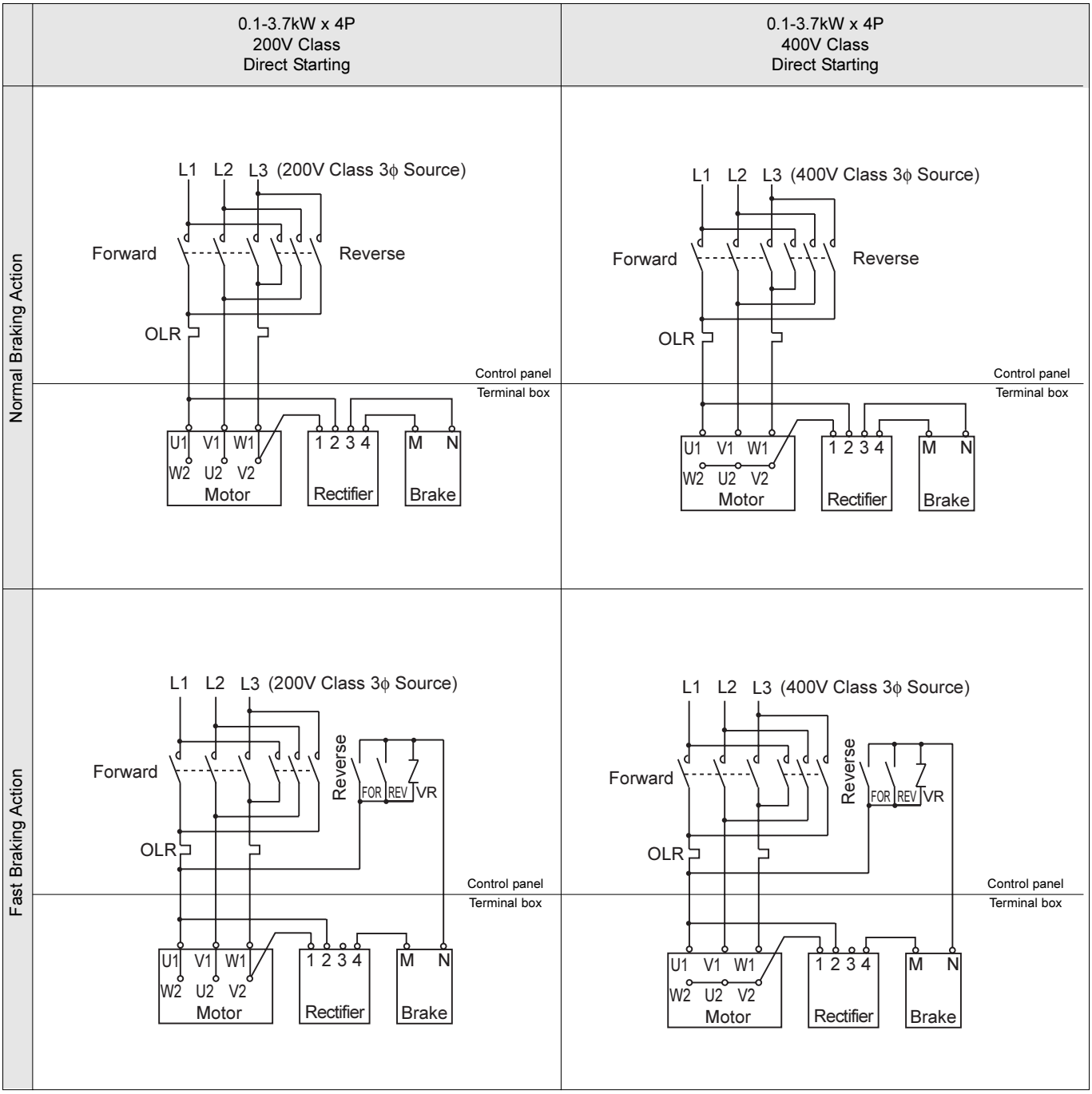

Customer should prepare the following elements on their own
Electromagnetic contactor
OLR: Overload relay
(overload protection)
VR: Varistor
(protection element)

Brake input power		AC200V~AC230V	AC380V~AC460V
Rated voltage of varistor		AC260V~AC300V	AC510V
Voltage of varistor		AC430V~AC470V	AC820V
Rated Voltage of varistor	FB-01A, 02A, 05A	0.2W and larger	0.4W and larger
	FB-1B	0.4W and larger	0.6W and larger
	FB-2B, 3B, 5B	0.6W and larger	1.5W and larger

Interrupting capacity (direct current coil load) should be at least 5 times of the braking current for contact capacity used in quick braking circuit.

Example of Connection

e. 3-Phase Motor with FB Brake for One Way Rotation (5.5-11kW)

	5.5-11kW x 4P 400V Class Direct Starting	5.5-11kW x 4P 400V Class ⅄ - Δ Starting
Normal Braking Action	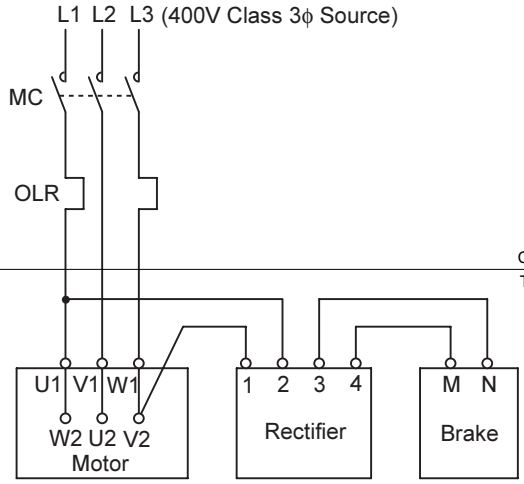	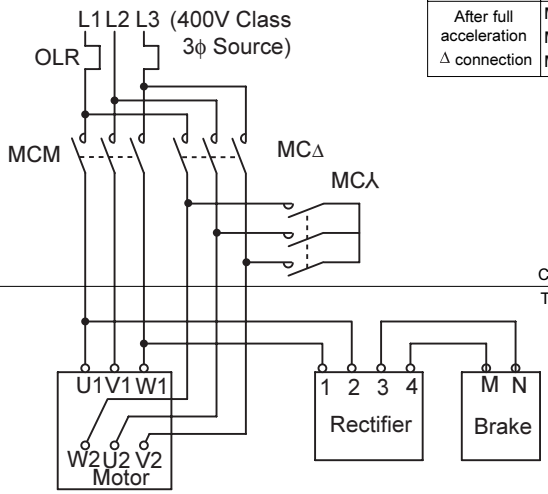 Start-up time ⅄ connection: MCM ON, MC Δ OFF, MC ⅄ ON After full acceleration Δ connection: MCM ON, MC Δ OFF, MC ⅄ ON
Fast Braking Action	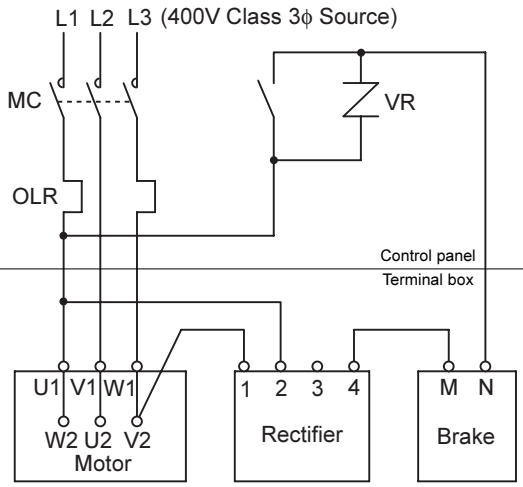	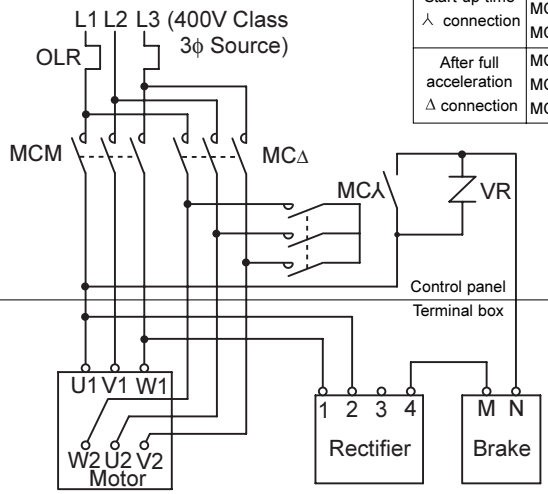 Start-up time ⅄ connection: MCM ON, MC Δ OFF, MC ⅄ ON After full acceleration Δ connection: MCM ON, MC Δ OFF, MC ⅄ ON

Example of Connection

f. 3-Phase Motor with FB Brake for Operating in Both Directions (5.5-11kW)

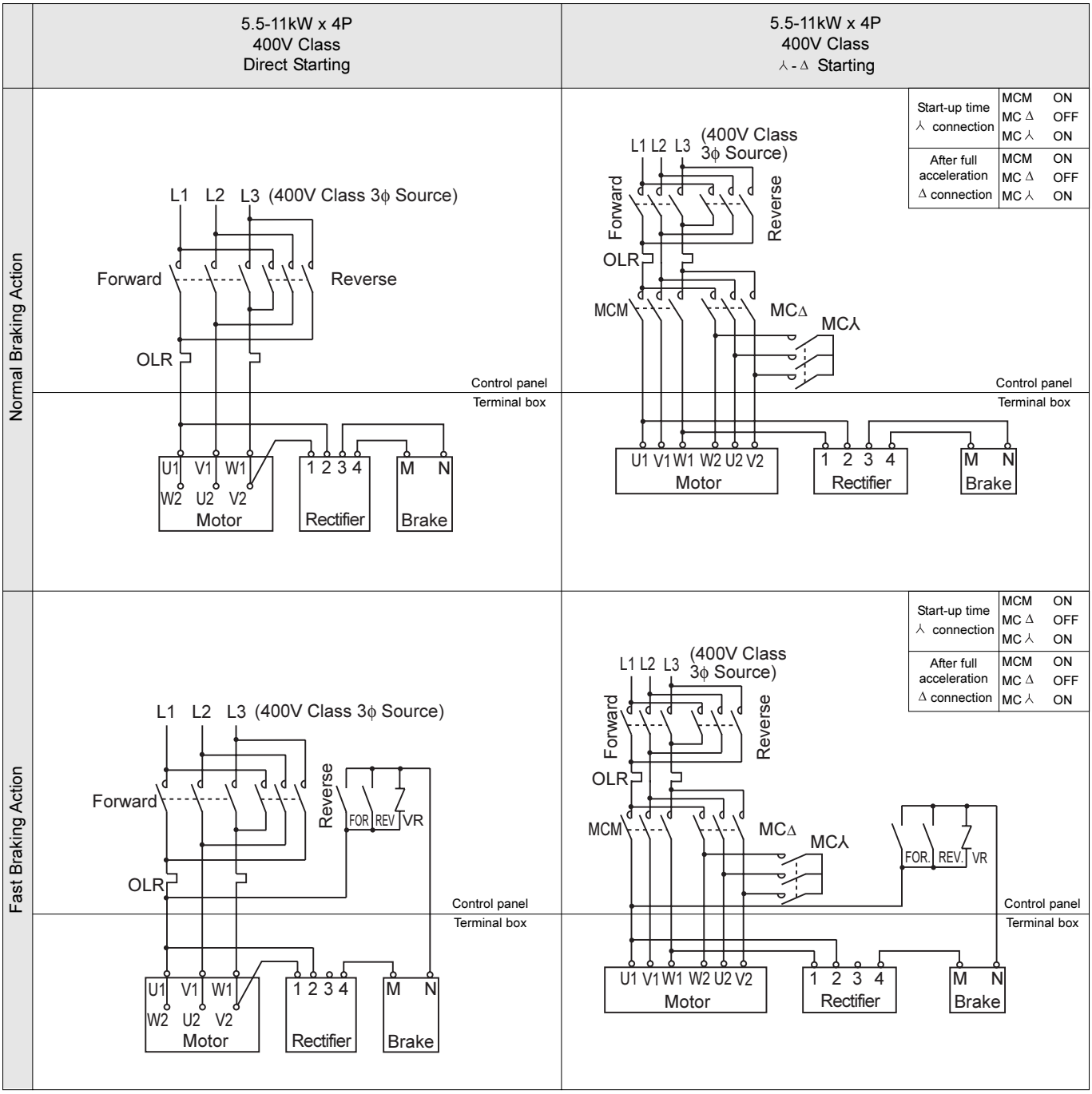

Customer should prepare the following elements on their own
Electromagnetic contactor
OLR: Overload relay (overload protection)
VR: Varistor (protection element)

Brake input power		AC200V~AC230V	AC380V~AC460V
Rated voltage of varistor		AC260V~AC300V	AC510V
Voltage of varistor		AC430V~AC470V	AC820V
Rated Voltage of varistor	FB-8B	0.6W and larger	1.5W and larger
	FB-10B, 15B	1W and larger	1.5W and larger

Interrupting capacity (direct current coil load) should be at least 5 times of the braking current for contact capacity used in quick braking circuit.

g. 3-Phase Motor with CMB Brake for One Way Rotation

	15kW x 4P 400V Class Direct Starting	15kW x 4P 400V Class ⅄ - Δ Starting
Normal Braking Action	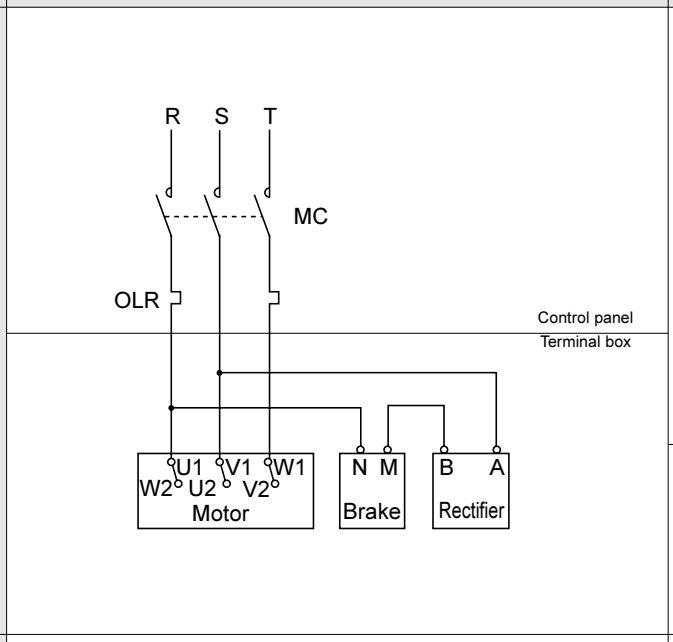	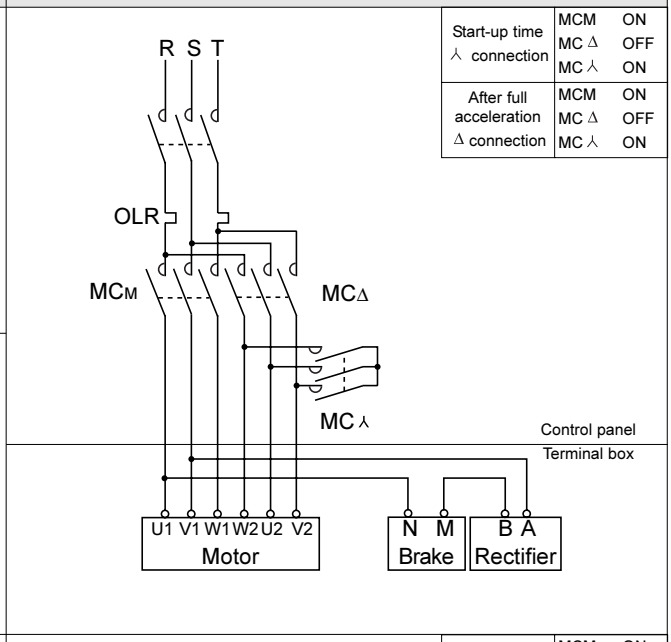
Fast Braking Action	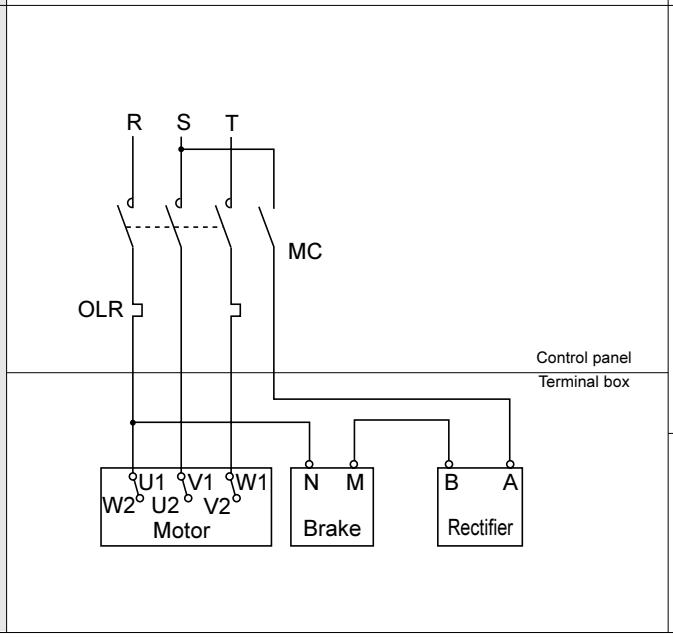	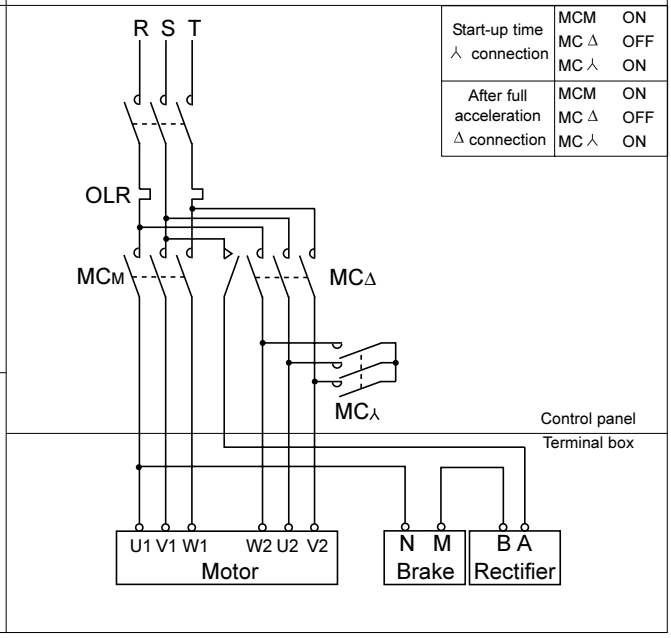

Example of Connection

h. 3-Phase Motor with CMB Brake for Operating in Both Directions

	15kW x 4P 400V Class Direct Starting	15kW x 4P 400V Class ⅄ - Δ Starting
Normal Braking Action	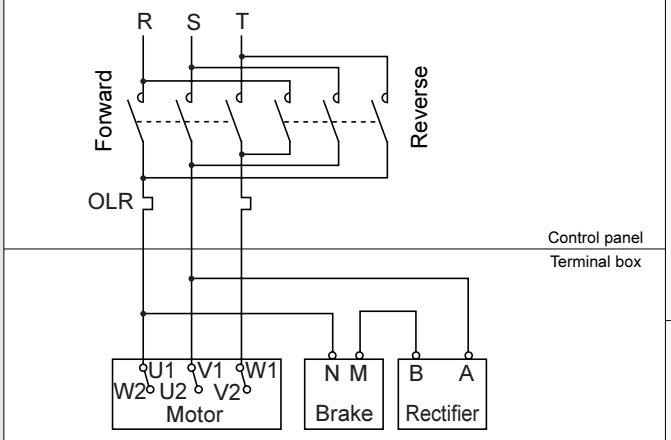	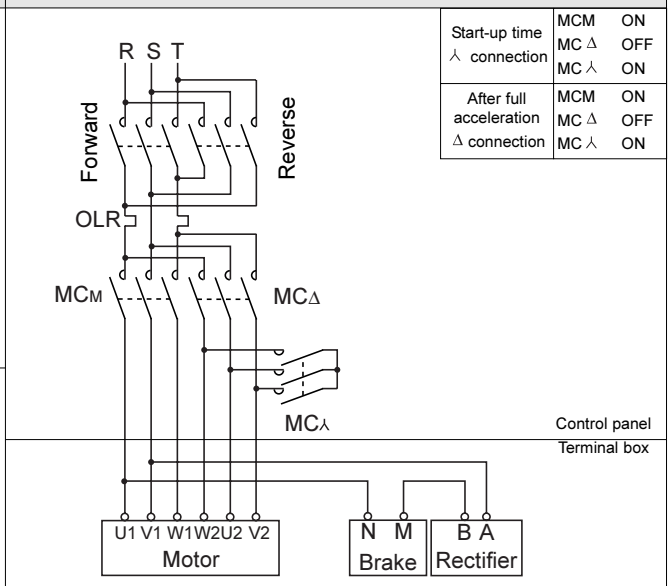
Fast Braking Action	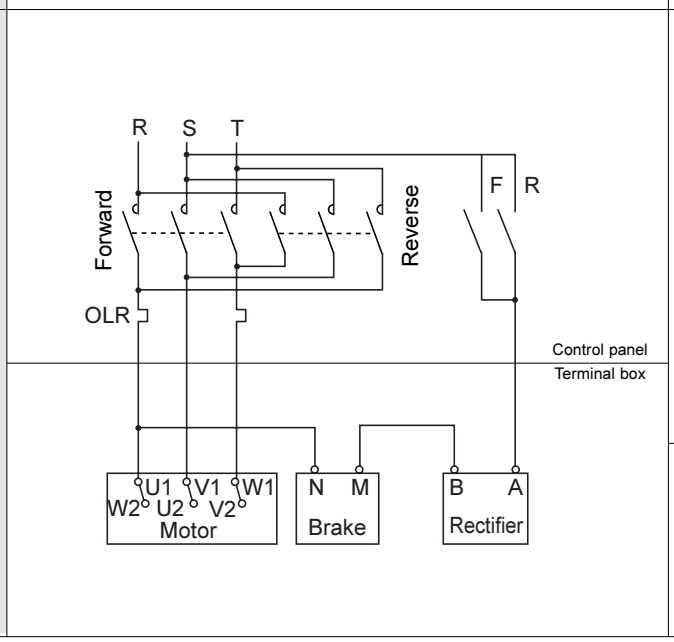	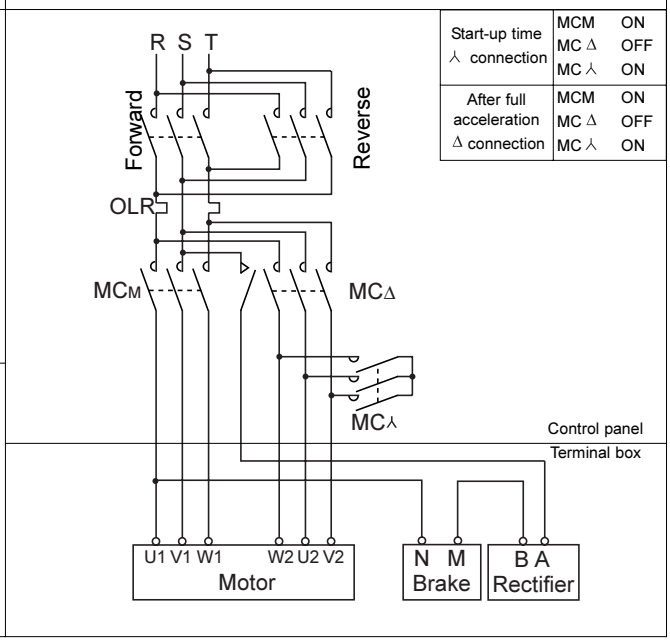

Example of Connection

i. 3-Phase Motor with CMB Brake for One Way Rotation

	15kW x 4P 400V Class Direct Starting	15kW x 4P 400V Class ⅄ - Δ Starting
Normal Braking Action	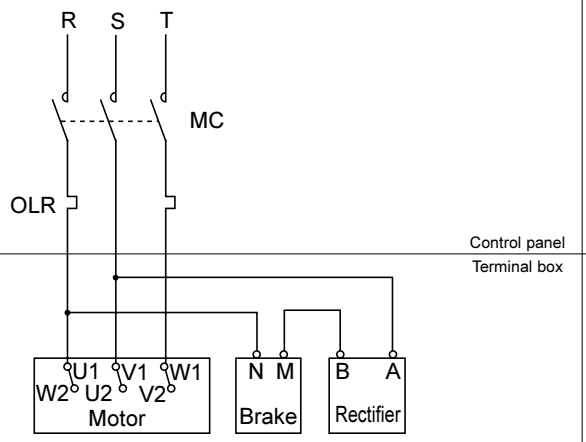	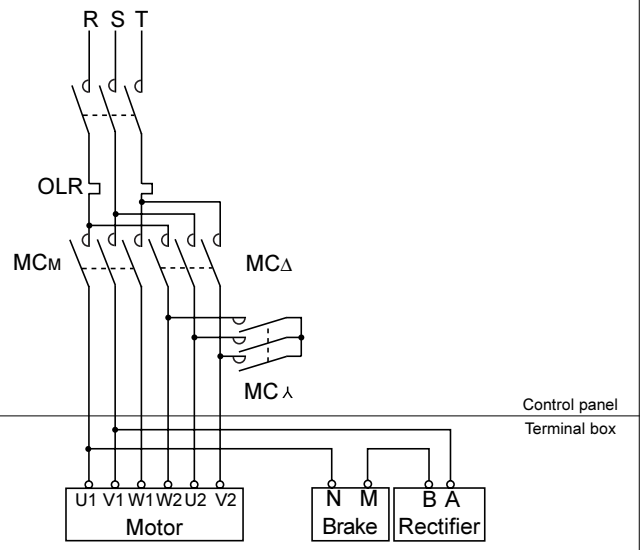
Fast Braking Action	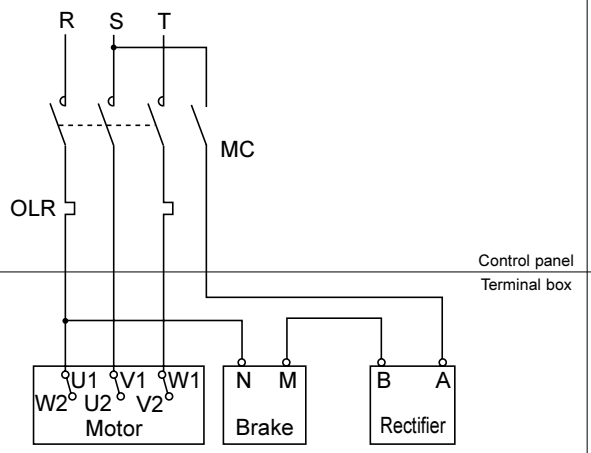	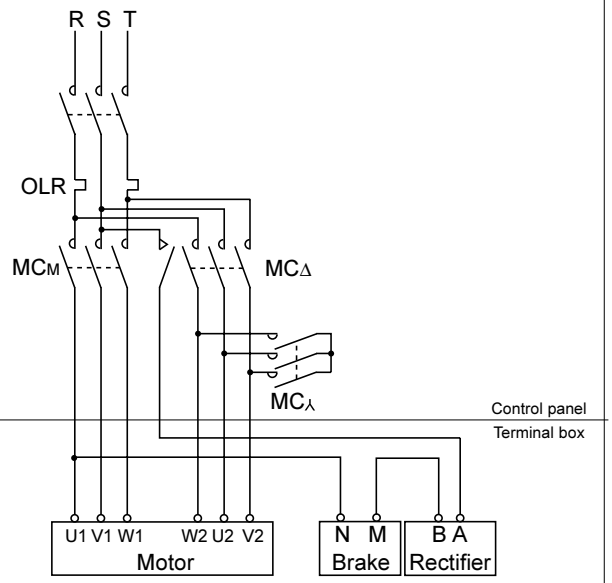

Example of Connection

j. 3-Phase Motor with CMB Brake for Operating in Both Directions

	15kW x 4P 400V Class Direct Starting	15kW x 4P 400V Class ⅄ - Δ Starting
Normal Braking Action	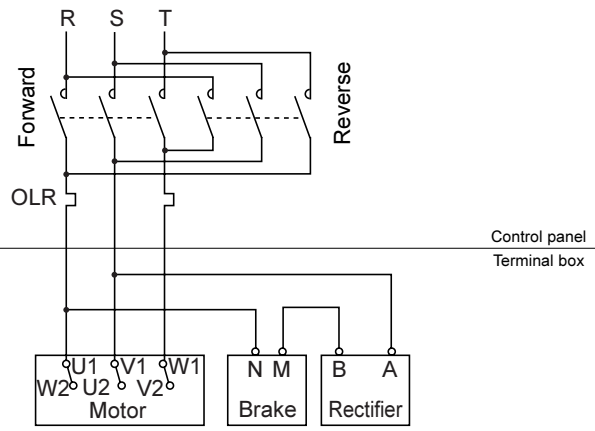	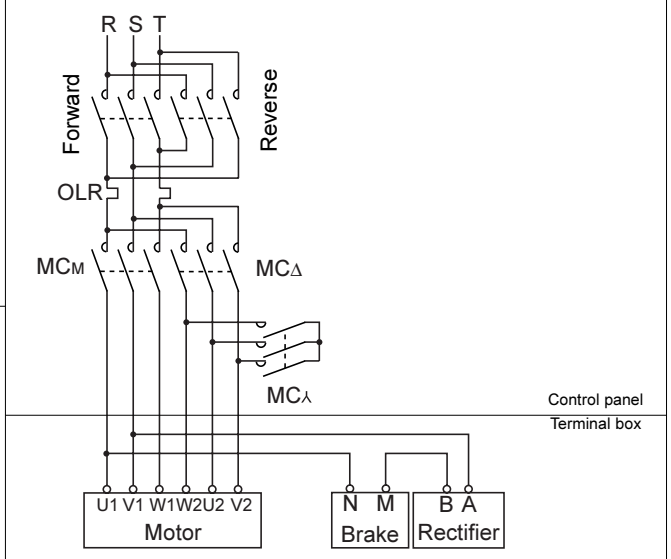
Fast Braking Action	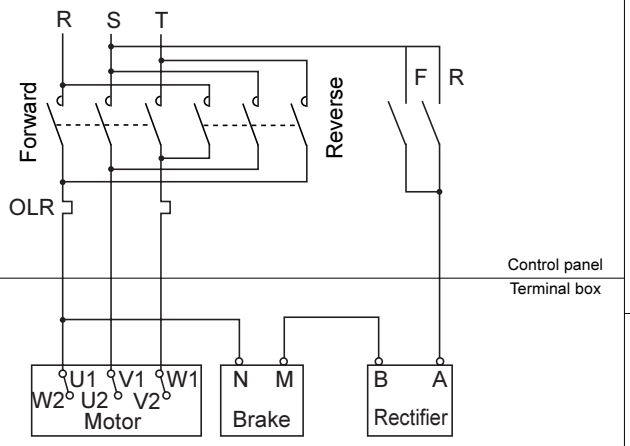	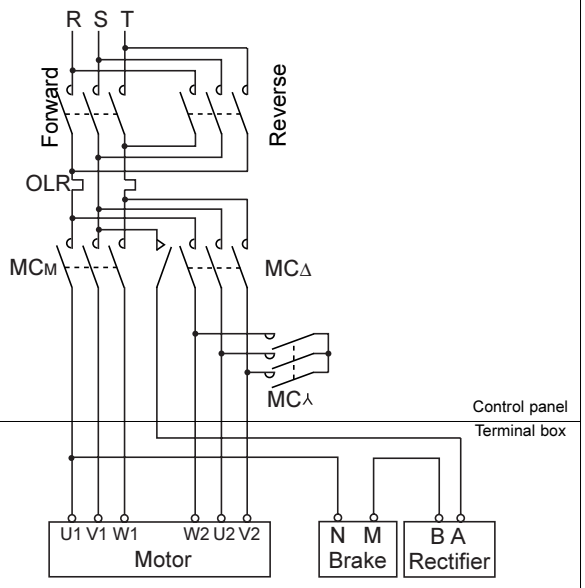

MEMO

Protection and Cooling

No.1 Symbol: Type of protection of humans and solid foreign substances
No.2 Symbol: Type of protection against water permeation
} Classified according to combination (IEC34-1)

Protection Method of Motors

No.1 Symbol / No.1 type \ No.2 Symbol / No.2 type	0 Non-protected type	2 Drip-proof type	3 Spray-proof type	4 Splash-proof type	5 Water-jet-proof type	6 Sea-wave-proof type	7 Immersion-proof type	8 Submersible type
0 (Non-protected type)	IP00			×	×	×	×	
1 (Semi-protected type)	IP10	IP12S			×	×	×	
2 (Protected type)	IP20	IP22S	IP23S	IP24	×	×	×	
4 (Totally enclosed type)	×			IP44	IP45			
5 (Dust-proof type)	×			IP54	IP55	IP56		

Note: 1. × denotes difficulty in forming the combination.
2. Outlined columns ▭ shows the range of standard models.
3. Please consult us if operating conditions include splashed water, or rain.

Class of No.1 Symbol

Type	Symbol	Description
Non-protected	0	Constructed without special protection against human contact and penetration of solid foreign substances.
Semi-protected	1	Constructed to prevent inadvertent contact with rotating and conductive parts inside the machine, by hand or other critical parts of human body. Constructed to prevent penetration of solid foreign substances over 50 mm in diameter.
Protected	2	Constructed to prevent contact with rotating and conductive parts inside the machine, by hand or other critical parts of the human body. Constructed to prevent penetration by solid substances over 12mm in diameter.
Totally enclosed	3	Constructed to prevent contact with the rotating and conductive parts inside the machine, by tools, electric wires, etc., with minimum width and thickness over 1mm. Constructed to prevent penetration of solid foreign substances over 1mm diameter. However, water drainage outlet and exhaust outlet may be of Symbol 2 construction.
Dust-proof type	4	Constructed to prevent contact with rotating and conductive parts inside the machine by any foreign object. Constructed for maximum protection against dust particles penetration, but such penetration will not interfere with normal operation.

Class of No.2 Symbol

Type	Symbol	Description
Non-protected	0	Constructed without special protection against water permeation.
Drip-proof	2	Constructed to prevent harmful effect from dripping water falling from within 15º direction from vertical.
Spray-proof	3	Constructed to prevent harmful effect from dripping water falling from within 60º direction from vertical.
Splash-proof	4	Constructed to prevent harmful effect from dripping water falling from any direction.
Water-jet-proof	5	Constructed to prevent harmful effect from spray from any direction.
Sea-wave-proof	6	Constructed to prevent harmful effect from strong spray from any direction.
Immersion-proof	7	Constructed for submersion into water of prescribed depth and time, without any harm even when water enter the unit.
Submersible	8	Constructed to assure normal operations under water.

Example: IP □ - 54 □

W / E / C

SM

→ Form of protection against water permeation: Splash-proof type

→ Form of protection against bodily injury and solid foreignsubstances penetration: Dust-proof type

→ JEC Standards abbreviation

S: Test of form of protection against water permeation conducted when motor is stopped.
M: Test of form of protection against water permeation, conducted while motor is operating.
When S or M is not indicated:
Conduct test when motor is at stop and during operation.
W: Outdoor type (Only Non-protected)
E: Explosion-proof type
C: Form of protection against other harmful atmosphere.

Cooling

Enclosure Construction	IEC Standards
Totally enclosed, non-ventilated (TENV)	IC410
Totally enclosed, fan-cooled (TEFC)	IC411
Totally enclosed, Air over (TEAO)	IC416

International Standards and Compliance of Sumitomo Products

UL Standards (Underwriters Laboratories)

UL Standards are established by Underwriters Laboratories Inc. (UL), an independent, not-for-profit product-safety testing and certification organization in the USA. It conducts series of scientific study, research, and testing to prevent harmful effect to human life, fire, and disaster. Although there is no regulation by the Federal Government for manufacturers' compliance, some state and cities mandate them. Using Sumitomo product with UL Standard Certification will represent your reliability, which is highly appreciated in the USA.

Motor	Non-explosion proof single-phase induction motor *1	Non-explosion proof 3-phase induction motor	3-phase induction motor with brake
Power	1/8~1HP × 4P	1/8~60HP × P	1/8~8HP × 4P
Voltage	115V, 230V	208V, 230V, 460V, 575V	
Frequency	60Hz	60Hz	
Thermal class	Class A	*3 Class A (Class B, Class F)	Class F
Ambient conditions	Indoor type *2		

*1 Contact us for manufacturing single-phase motor or motor with brake.
*2 Outdoor types are unavailable.
*3 Contact us for manufacturing insulation Type B and F.

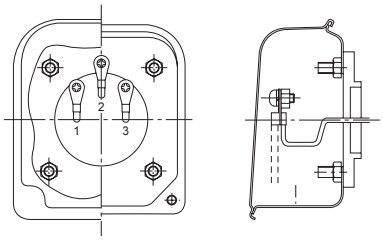

3-Phase indoor terminal box

Differences from Sumitomo standard models
- Terminal symbol: 1, 2, 3
- Name plate with UL mark and measurement expressed by units HP
- Opposite rotating direction from the Japanese domestic products
- Copper terminal box
- UL standard motor coil and brake coil

UL Mark

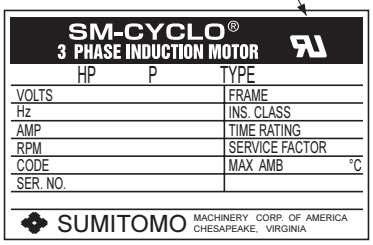

UL Nameplate

Remarks
- Motors must be manufactured, modified, and repaired at certified factories.
- Certified motor for inverter (AF Motor) may be manufactured for range 1/8~11HP.

CSA Standards (Canadian Standards Association)

CSA Standards are established by the semiprivate Canadian Standards Association, a not-for-profit membership-based association. Most of the Canadian states requires this CSA certification for its domestically sold electric related products. Some American states evaluate CSA Standards comparable to UL Standards.

Motor	1-phase induction motor *1	3-phase induction motor	3-phase induction motor with brake	High efficiency 3-phase induction motor *1	High efficiency 3-phase induction motor with brake *1
Power	1/8~1HP × 4P	1/8~60HP × 4P	1/8~30HP × 4P	1.5~50HP × 4P	1.5~30HP × 4P
Voltage	115V, 230V	208V, 230V, 460V, 575V		230V, 460V, 575V	
Frequency	60Hz				
Thermal class	Class B (and Class F)				
Ambient conditions	Indoor type *2				

*1 Contact us for manufacturing of single-phase or high-efficiency motor with brake.
*2 Outdoor types are not available.

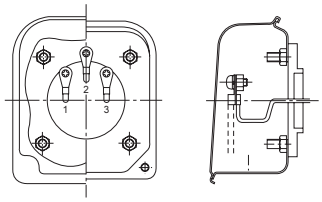

3-Phase indoor terminal box

Differences from Sumitomo standard models
- Terminal symbol: 1, 2, 3 (with Brake type, T1, T2, T3)
- The frame size of a high-efficiency motors are different from standard types.
- Name plate with CSA mark and measurement in HP
- Opposite rotating direction
- Copper terminal box
- CSA standard motor coil

CSA Mark

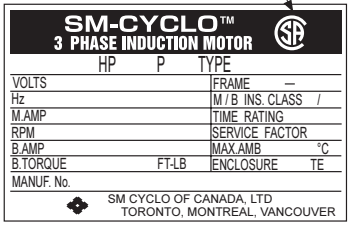

CSA Nameplate

Remarks
- CSA certified motor is necessary for export to Canada. In addition, high-efficiency motor is necessary for 1 HP and above.
- Motors must be manufactured, modified, and repaired at certified factories.
- Because CSA does not certify motors for inverters, our AF Motors is not CSA certified and does not come with the CSA
- Mark although it complies with the CSA standard.
  NRCan established the energy efficiency act (EEACT) in 1992 and the energy efficiency regulations (EER) in 1995. Additional regulations were applied to gearmotors imported on November 27, 1999 and later. Gearmotor import which do not meet the efficiency standards are now banned under this law.(Subject capacity: 1~200HP, Subject frame: IEC frame size 90 and above, Subject voltage: 600V and below, constant speed motor)

International Standards and Compliance of Sumitomo Products

NEMA Standards (National Electrical Manufacturers Association)

NEMA Standards include numerous standards for electric products established by the National Electrical Manufacturers Association (NEMA) to eliminate misunderstandings between manufacturer and purchaser.

Differences from Sumitomo standard models
- · Terminal symbol: 1, 2, 3
- · Name plate marked with NEMA DESIGN and measurement in HP
- · Opposite rotating direction from the Japanese domestic products
- · Copper terminal box

NEMA standard motor coil

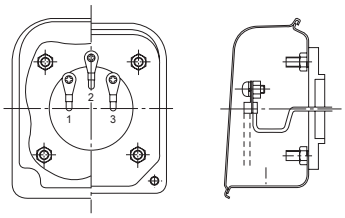

3-Phase indoor terminal box

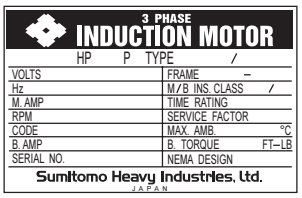

NEMA Nameplate

Remarks
- · No approval is required to state NEMA compliance
- · NEMA is also applicable for inverter motor (AF motor), but limited to terminal symbols, measurement in HP, rotating direction and terminal box.

Other Standards

Application of International Standards (Example)

○: Sumitomo standards
△: Manufactured specially on customer's request

Country/Standards	Japan · JIS JEM JEC	International·IEC	UK · BS
Standard output	○	○	△: 4kW and below ○: 5.5kW and above
Applicable output frame size	○	-	△
Motor mounting dimension of each frame size	○ Note	○ Note	○ Note
Shaft end dimension	○ Note	○ Note	△ Note
Dimension tolerance of shaft end key and keyway	○ Note	○ Note	△ Note
Thermal class	○	○	○
Lead wire code	○	○	○
Standard rotation direction	○	△	△
Description on nameplate	○	△	△
Characteristic testing method	○	○	△
Standard voltage	200V, 220V 400V, 440V	△	415V
Standard frequency	50Hz, 60Hz	50Hz, 60Hz	50Hz

IEC- International Electrotechnical Commission.
BS- British Standards.

Note: CYCLO flange dimension is the standard. Consult us for flange dimension for your required compliance standards.

Major Japanese Standards

(1) General rotating electrical machines
- JIS C 4004 (1992): General rules for rotating electrical machines
- JEC-200 (1993): Rotating machinery in general
- JEM 1188 (1969): Rated output values of electric motors

(2) General 3-phase induction motors
- JIS C 4210 (1983): Low-voltage 3-phase squirrel cage induction motors for general purpose
- JIS C4212 (2000): High efficiency low-voltage 3-phase squirrel cage induction motors.
- JEC-37 (1979): Induction machines

(3) Methods of testing and calculating characteristics
- JEC-37 (1979): Induction machines
- JIS C 4207 (1995): Calculating method of 3-phase induction motors characteristics

(4) Dimensions
- JEM 1400 (1991): Dimension of low-voltage 3-phase squirrel cage induction motors for general purpose
- JEM 1401 (1991): Dimensions of flange-mounted low-voltage 3-phase squirrel cage induction motors for general purposes

(5) Explosion-proof construction
- JIS C 0903 (1983): Electrical apparatus for explosive atmospheres in general industries
- JIS C 0904 (1983): Test methods on electrical apparatus for explosive gas atmospheres in general industries
- JIS C 0905 (1983): Supplementary requirements for construction of electrical apparatus for explosive atmosphere in general industries

Recommended practices for explosion-protected electrical installations in general industries (1979)
Rules for authorization of explosion-proof construction of electrical machine tools (1981)

(6) Others
- JIS C 4003 (1977): Classification of materials for insulation of electrical machinery and apparatus
- JEC-147 (1960): Classification of materials for insulation of electrical machinery and apparatus
- JEM 1313 (1983): Noise levels for low-voltage 3-phase squirrel-cage induction motors for general purpose

Abbreviations:
- JEC Japanese Electrotechnical Committee Standards
- JIS Japanese Industrial Standard
- JEM Japan Electrical Manufacturers' Association

International Standards and Compliance of Sumitomo Products

CCC Standards (China Compulsory Certification)

China had implemented the China Compulsory Certification (CCC) system since May 1, 2002 as becoming the full member of World Trade Organization (WTO). They have moved on to compulsory licensing on August 1, 2003. Motor capacity 1.1kW and below are subject to this certification, and requires CCC Mark for sales in China. Below table is our motor with CCC.

Motor	Single Phase Motor		Three Phase Motor		AF Motor	AF Motor (Foot Mount)
Capacity	15~90W	0.1~0.75kW	40~90W	0.1~1.1kW	0.1~0.75kW	0.4~0.75kW
Voltage	220V		380V			
Frequency	50Hz		50Hz			
Thermal class	Class E	Class B	Class E	Class F		
Usage	Indoor (IP44), Outdoor (IP55)		Indoor (IP44), Outdoor (IP55)			

AF motor: 3 Phase Motor for inverter

Difference with standard items
- CCC Mark as in the right is applied on the nameplate.
- Aluminum terminal box is the standard for three phase motor (except indoor specification for 40~90W).
- Terminal block type (6 terminals, European system) is the standard for three phase motor (for 0.1kW or more).
- Rotational direction is the opposite from Japanese domestic specification (in CCW direction looking from the anti-load side).
- CCC correspondence motor coil is used.

China Compulsory Certificate

Remarks

· CCC Mark is necessary when exporting small size motor (or gearmotor) units of 1.1kW or below to China.

· Subject service products and spare parts without certification may be permitted for import to China by applying for exemption. Consult us for any clarification.

EC Directives and CE Marking

EC Directives are established to for free distribution of products across the borders within the European Union (EU). CE Mark applied on the product indicates their compliance to EC Directives..

Relevant EC Directives and Implementation Timing

The following three directives apply to ordinary machine products.

EC directives \ Details	Subjects	Directive details
Machinery Directive	Aggregates of parts, which are movable (Mainly industrial machines)	Essential matters related to safety of machines are stipulated. Machines that are electrically dangerous shall fulfill the requirements for low voltage.
Low Voltage Directive	Products driven by power of 50-1,000 VAC or 75-15,000 VDC	Products not conforming to standards cannot be sold in the market.
Electromagnetic Compatibility Directive	All types of products that may cause countermeasure (electromagnetic radiation) or have their functions impeded by nearby radio waves	EMI: Not to cause external electromagnetic interference EMS: To withstand external electromagnetic interference

Transition and Time Limits of CE Marking Implementation for Major Directives

EC Directive \ Year	1990	1991	1992	1993	1994	1995	1996	1997	1998	1999	2000	2001	2002	2003
Machinery Directive														
89/392/EEC Original				1/1		1/1								
91/368/EEC Revision I				Transition		Enforcement								
93/44/EEC Revision II														
EMC Directives			1/1				1/1							
89/336/EEC Original			Transition				Enforcement							
92/31/EEC Revision I														
Low Voltage Directive						1/1		1/1						
73/23/EEC Original						Transition		Enforcement						
93/68/EEC Revision I														

Conformity to EC Directive and CE Mark of Our Products

Our induction motor conforms to the Machinery Directive (issued January 1995) and Low Voltage Directive (issued January 1996) of the EC Directives.
EMC Directive (issued January 1996) does not contain statements for induction motors.

CE marking logo shown on nameplates

CE

EC Directives and CE Marking

Standard Specifications of CE Marking Motors

Input power:	0.1kW~4kW: 230/400V 50Hz Dual voltage direct starting 5.5kW or more: 400V 50Hz ⅄-Δ Start
Thermal class:	0.1kW~0.4kW: Class E 0.75kW or more: Class B
Rated time:	Continuous
Characteristics:	IEC34-1
Protection:	IP54 (without brake), IP44 (with brake)
Terminal box:	(Material) 5.5kW or less: Aluminum (M25 bolts (P1.5) × 2pcs) 7.5kW or more: Cast iron (M32 bolts (P1.5) × 2pcs) (Specification) Terminal plate (six terminals European style) With grounding terminal Conduit tube of M thread
Shaft rotating direction:	Rotating direction is reverse when the unit is used outside Japan.
Insulation:	Distances between insulated surfaces and spaces confroms to IEC Standards.
External dimensions:	Same as standard except for the terminal box
TÜV Test Report:	Representative model 0.75kW × 4p, 230V/400V is TÜV certified (Oct 1996) Our CE marking motors are manufactured conforming to TÜV.
Declaration of Conformity:	"Declaration of Conformity" document is necessary for CE marking is available.

Terminal Box Example

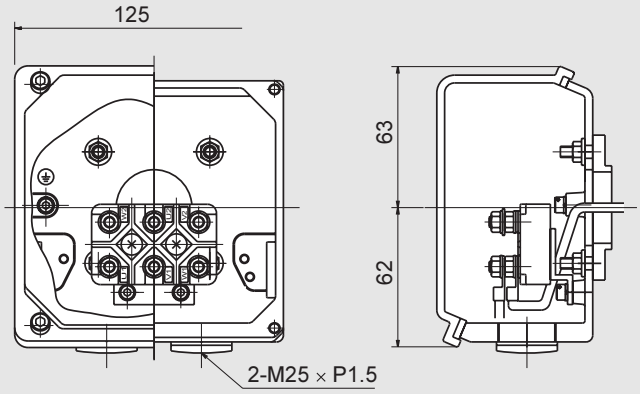

Manufacturing range of CE Marking Motors

3-phase induction motor

	230/400V dual voltage															400V		
Input power symbol	01	012	018	02	03	04	05	08	1	1H	2	3	4	5	6	8	10	15
KW × 4P	(0.1)	0.12	0.18	(0.2)	0.25	0.37	(0.4)	0.55	0.75	1.1	1.5	2.2	3	(3.7)	4	5.5	7.5	11
Frame size	F63S		F63M			F71M		F80S	F80M	F90S	F90L	F100L	F112S	F112M		F132S	F132M	F160M

- kW without brackets in the above table indicate standard capacity for Europe. kW within the brackets shows capacity in Japan and some other countries.
- Standard European kW motors are recommended. Motors of kWs within brackets are also available.
  3-phase 200V/50Hz, 200V/60Hz, 220V/60Hz
  3-phase 400V/50Hz, 400V/60Hz, 440V/60Hz
  3-phase 380V/50Hz, 415V/50Hz
  Contact us for motors with kW and voltage not shown in the above table.
- Consult us for M bolt (Metric bolt) for conduit tube.

International Power Source Voltage and Conditions

Country / Area		Frequency	Voltage
Japan		50Hz / 60Hz	Single phase 100V / 200V, 3-phase 200V / 400V
North America	America	60Hz	Single phase 115V / 230V, 3-phase 230V
	Canada	60Hz	Single phase 120V / 347V, 3-phase 230V, 460V, 575V
Asia	Korea	60Hz	Single phase 110V / 220V, 3-phase 220V / 380V
	Taiwan	60Hz	Single phase 110V / 220V, 3-phase 200V / 220V / 380V
	Hong Kong	50Hz	Single phase 200V / 220V, 3-phase 346V / 380V
	China	50Hz	Single phase 220V, 3-phase 220V / 380V
	Philippines	60Hz	Single phase 220V, 3-phase 380V
	Thailand	50Hz	Single phase 220V, 3-phase 220V / 380V
	Singapore	50Hz	Single phase 230V, 3-phase 415V
	Malaysia	50Hz	Single phase 240V, 3-phase 415V
	Indonesia	50Hz	Single phase 220V, 3-phase 380V
	India	50Hz	Single phase 240V, 3-phase 240V / 415V
	Bangladesh	50Hz	Single phase 230V, 3-phase 400V
Oceania	Australia	50Hz	Single phase 240V, 3-phase 415V
	Guam	60Hz	Single phase 120V, 3-phase 240V / 480V
	New Zealand	50Hz	Single phase 230V, 3-phase 230V / 415V
Europe	Austria	50Hz	Single phase 230V, 3-phase 400V
	Belgium	50Hz	Single phase 230V, 3-phase 400V
	Bulgaria	50Hz	Single phase 220V, 3-phase 380V
	Denmark	50Hz	Single phase 230V, 3-phase 400V
	Finland	50Hz	Single phase 230V, 3-phase 400V
	France	50Hz	Single phase 230V, 3-phase 400V
	Germany	50Hz	Single phase 230V, 3-phase 400V
	Greece	50Hz	Single phase 230V, 3-phase 400V
	Hungary	50Hz	Single phase 220V, 3-phase 380V
	Italy	50Hz	Single phase 220V, 3-phase 380V
	Luxembourg	50Hz	Single phase 230V, 3-phase 400V
	Netherlands	50Hz	Single phase 230V, 3-phase 400V
	Norway	50Hz	Single phase 220V / 230V, 3-phase 380V
	Poland	50Hz	Single phase 220V, 3-phase 380V
	Portugal	50Hz	Single phase 230V, 3-phase 400V / 480V
	Romania	50Hz	Single phase 220V, 3-phase 380V
	Spain	50Hz	Single phase 127V / 220V, 3-phase 220V / 380V
	Sweden	50Hz	Single phase 230V / 400V, 3-phase 400V / 690V
	Switzerland	50Hz	Single phase 230V, 3-phase 400V
	United Kingdom	50Hz	Single phase 230V, 3-phase 400V

*Voltage may differ from above in certain region or city, even in the same country.
*Single phase 120V indication is typical for USA and Canada, although their standard voltage is 115V.

F TECHNICAL DATA

3. Common

Paint and Rustproof Coating

1. Coating Specifications

Treatment	Kind of painting: Classification	Kind of painting: Paint of finish coat	Additional leadtime [days]	Painting specifications: Type	Painting specifications: Layers [μm]	Painting specifications: Quality	Applied paint: Brand	Weather resistance	Submersible	Oil-proof	Acid resistance	Alkal resistance	Heat resistance [°C]	Application
Cast Iron: Near White blast cleaning / Steel plate: Power tool cleaning	Standard	-	0	Under coating	1	Modified alkyd resin	UNIGROUND PTC PRIMER						100	Standard under coat
		Acrylic modified phthalic	0	Finish coating	1 (15~30)	Acrylic modified alkyd resin	NEORON #2000	○	×	△	◎△	◎△	100	Standard under coat
	Standard export painting	Acrylic modified phthalic	2	Under coating	2 (30~60)	Modified alkyd resin	UNIGROUND PTC PRIMER	○	×	△	◎△	×	100	Models for export
				Finish coating	1 (15~30)	Acrylic modified alkyd resin	NEORON #2000							
	Special painting (including rust-proof and heat resisting painting) one layer of Uniground PTC Primer as the first primer	Modified epoxy	3	Under coating	1 (20~40)	Vinyl modified alkyd resin	NEO-GOSE #500 Red lead primer	◎	△	○	◎△	◎△	100	Moderate corrosive atomosphere, sea side, outdoor humid atomosphere, chemical plant area, etc.
				Finish coating	2 (30~60)	Acrylic modified alkyd resin	Acron #300							
		Long oil phthalic (synthetic resin type)	7	Under coating	2 (40~70)	Lead rust preventive paint	SD MARINE PRIMER (rust)	○	×	×	◎△	×	100	Ocean-going vessel & boat, bridge, sea side, outdoor humid atomosphere, etc.
				Finish coating	2 (30~60)	Synthetic resin paint	PENFORTE #600							
		Chloride rubber	10	Under coating	2 (40~70)	Lead rust preventive paint	SD MARINE PRIMER (rust)	◎	△	△	○	○	80	Ocean-going vessel & boat, bridge, sea side, outdoor humid atomosphere, etc.
				Second coating	2 (30~60)	Phenol M.I.O paint	SHINTO MIO							
				Finish coating	2 (40~70)	Chloride rubber paint	RUBBER #100							
		Phenol	7	Under coating	2 (40~70)	Lead rust preventive paint	SD MARINE PRIMER (rust)	○	×	△	○	◎△	100	In-and-out door of acid treating plant or chemical plant, etc.
				Finish coating	2 (30~60)	Phenol resin enamel	NEW AKNON							
		Heat-proof silver	7	Under coating	1 (20~40)	Lead rust preventive paint	SD MARINE PRIMER (rust)	○	×	×	×	×	120	Heating furnace (120°C), etc.
				Finish coating	1 (15~30)	Aluminum paint	SILVER TOP (heat resisting)							
	Extra rust-proof painting	Epoxy	10	Under coating	1 (50~60)	Special permeability epoxy aluminum paint	CARBOMASTIC #15	◎	○	○	○	○	150	Chemical contact area, chemical plant, anticorrosion plant, etc.
				Finish coating	3 (30~90)	Polyamide epoxy	NEO-GOSE #200							
		Epoxy	10	Under coating	1 (50~60)	Special permeability epoxy aluminum paint	CARBOMASTIC #15	◎	○	○	○	○	150	Nuclear power plant, etc.
				Finish coating	3 (30~90)	Polyamide epoxy	NEO-GOSE #2300CW							
		Polyurethane	10	Under coating	1 (50~60)	Special permeability epoxy aluminum paint	CARBOMASTIC #15	◎	○	○	○	○	150	Nuclear power plant, etc.
				Finish coating	3 (45~90)	Polyisocianate urethane resin paint	NY POLIN K finish coat							
	Extra rustpreventive painting (sand blast undercoating)	Thick film epoxy	12		5 (250~350)	Thick film type modified epoxy resin paint	NEO-GOSE #2300 NTHB	◎	◎	○	○	○	100	Submersible equipment, marine structure, etc.

Note:
1. "Additional leadtime" refers to the number of days required for special coating in addition to standard painting.
2. Standard coating is 6.5PB 3.6/8.2. Coating specification may differ for special coating color.
3. Paint specified above is subject to replacement by comparable product.
4. "*" indicates coating which may fade with sunlight.
5. Consult us when ambient temperature exceeds heat resistance temperature indicated above.
   (Heat resistance temperature above is only for the paint, not for the CYCLO® DRIVE.)
6. Consult us when ambient temperature fluctuates between low and room temperature in short time period.
7. Thick film epoxy coating has limited color selections. Consult us for coating other than N1.0 or 10GY6/2.
   (Our standard coating 6.5PB3.6/8.2 may not be applied.)

◎○○△: Appropriate
△: Caution necessary for selection
×: Inappropriate

2. Surface Conditioning

Treatment	Surface condition after treatment	Methods	Standards	
			SSPC	SIS
Class 1 Near white blast cleaning	Surface completely free of mill scales, rust, corrosives, dirt, and other foreign substances. Embedded residues (mill scales, rust, slight smears, or discoloration of oxide substances) are acceptable. However, minimum 95% of the surface area should be visibly clean of any residues. Remaining surface may contain slight discolorations, such as stains.	○Near white ○Blast cleaning ○Shot blast ○Sand blast, etc.	SP-10	Sa-2 1/2
Class 2 Power tool cleaning	Surface free of loose mill scales, rust, corrosives, dirt, and other foreign substances. Embedded residues (mill scales, rust, slight smears or discoloration of oxide substances) are acceptable. However, minimum 2/3 of the surface area should be visibly clean of any residues. Remaining surface may contain slight discolorations, such as stains, and residual rust, and coating peelings in pores, for surface with porous corrosion.	○Commercial Blast cleaning ○Power Tool Cleaning ○Disk sander ○Wire wheel ○Grinder, etc.	SP-6 (SP-3)	Sa-2 (St-3)
Class 3 Hand tool cleaning	Surface free of loose scales, rust, coating, oil & grease, dirt, and other foreign substances, with slight metallic luster. The surface should be cleaned with wire brush, scraper, etc.	○Hard Tool Cleaning ○Wire brush ○Scraper, etc.	SP-2	St-2

(U.S.A. Steel Structual Painting Councils) (SWEEDEN, SVENSK Standard, S.I.S. 055900)

Rustproof Treatment Standards

Our complete products are shipped with following rust proofing treatment.

1. Standard Rustproof Specification

(1) External Rustproof

Our assembled products are shipped with rust proofing oil applied. Check rustproof condition six months after shipment. Reapply rustproof treatment if necessary.

(2) Internal Rustproof

Lubrication	Grease lubricated models	Oil lubrication models
Rustproof period	1 year	6 months
Storage condition	Storage inside general shop or warehouse, with relatively low humidity, dust, extreme temperature fluctuation, corrosive gas, or such.	

2. Rustproof Specification for Export

Consult us when the item is exported or when more treatment is necessary than standard rustproof treatment. Export rustproof treatment is available.

Drive System Formulas Reference Materials

1. Speed N [r/min] and Velocity [m/s]

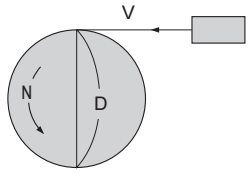

$$V = \pi \cdot D \cdot \frac{N}{60} \text{ [m/s]}$$

π: Circular constant ($\approx$3.14)
D: Wheel diameter

2. Torque T [N·m, kgf·m]

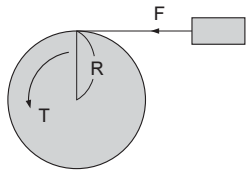

SI Units

$T = F \cdot R$ [N·m]

F: Load [N]
R: Wheel radius [m]

Gravitational Units

$T = F \cdot R$ [kgf·m]

F: Load [kgf]
R: Wheel radius [m]

3. Power P [kW]

SI Units

$$P = \frac{F \cdot V}{1000}$$

F: Load [N]
V: Velocity [m/s]

Gravitational Units

$$T = \frac{F \cdot V}{102}$$

F: Load [kgf]
V: Velocity [m/s]

4. Power P [kW], Torque T [N·m, kgf·m], Speed N [r/min]

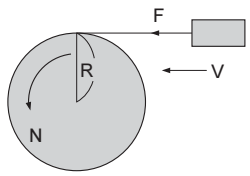

SI Units

$$P = \frac{N \cdot T}{9550} \text{ [kW]} \qquad T = \frac{9550 \cdot P}{N} \text{ [N·m]}$$

$$P = \frac{F \cdot V}{1000} \text{ [kW]} \qquad V = \pi \cdot 2 \cdot R \cdot \frac{N}{60} \text{ [m/s]}$$

F: Load [N]

$$\therefore P = \frac{F \cdot \pi \cdot 2 \cdot R \cdot \frac{N}{60}}{1000} = \frac{2 \cdot \pi}{1000 \times 60} \cdot N \cdot F \cdot R \text{ [kW]}$$

$T = F \cdot R$

$$\therefore P = \frac{2 \cdot \pi}{1000 \times 60} \cdot N \cdot T = \frac{N \cdot T}{9550} \text{ [kW]}$$

Gravitational Units

$$P = \frac{N \cdot T}{975} \text{ [kW]} \qquad T = \frac{975 \cdot P}{N} \text{ [kgf·m]}$$

$$P = \frac{F \cdot V}{102} \text{ [kW]} \qquad V = \pi \cdot 2 \cdot R \cdot \frac{N}{60} \text{ [m/s]}$$

F: Load [kgf]

$$\therefore P = \frac{F \cdot \pi \cdot 2 \cdot R \cdot \frac{N}{60}}{102} = \frac{2 \cdot \pi}{102 \times 60} \cdot N \cdot F \cdot R \text{ [kW]}$$

$T = F \cdot R$

$$\therefore P = \frac{2 \cdot \pi}{102 \times 60} \cdot N \cdot T = \frac{N \cdot T}{975} \text{ [kW]}$$

5. Acceleration Force F_A [N, kgf]

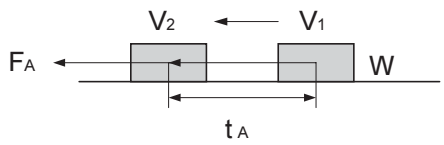

SI Units

$$F_A = m \cdot \alpha = m \cdot \frac{V_2 - V_1}{t_A} \text{ [N]}$$

$$\alpha = \frac{V_2 - V_1}{t_A}$$

m: Mass [kg]
α: Acceleration [m/s²]
t_A: Acceleration Time [s]

Gravitational Units

$$F_A = m \cdot \alpha = \frac{W}{g} \cdot \frac{V_2 - V_1}{t_A} \text{ [N]}$$

$$\alpha = \frac{V_2 - V_1}{t_A}$$

W: Weight [kgf]
g: Acceleration of gravity ≈ 9.8 [m/s²]
m: Mass [kgf·s²/m]
α: Acceleration [m/s²]
t_A: Acceleration Time [s]

6. Acceration Torque T_A [N·m, kgf·m]

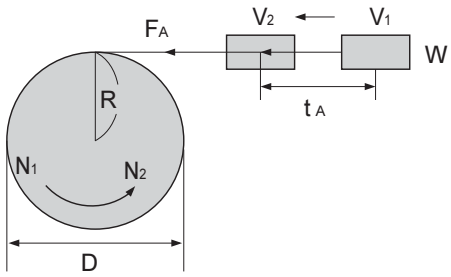

SI Units

$$T_A = F_A \cdot R \qquad F_A = m \cdot \frac{V_2 - V_1}{t_A}$$

$$V_2 = \pi \cdot D \cdot \frac{N_2}{60} \qquad V_1 = \pi \cdot D \cdot \frac{N_1}{60}$$

$$D = 2 \cdot R$$

$$\therefore T_A = m \cdot \frac{\frac{\pi \cdot 2 \cdot R}{60} \cdot (N_2 - N_1)}{t_A} \cdot R$$

$$= \frac{2 \cdot \pi \cdot m \cdot R}{60} \cdot \frac{N_2 - N_1}{t_A} \cdot R$$

$$= \frac{m \cdot R^2}{9.55} \cdot \frac{N_2 - N_1}{t_A} \text{ [N·m]}$$

$m \cdot R^2 = J$ (moment of inertia [kgm²])

$$\therefore T_A = \frac{J}{9.55} \cdot \frac{N_2 - N_1}{t_A} \text{ [N·m]}$$

Gravitational Units

$$T_A = F_A \cdot R \qquad F_A = \frac{W}{g} \cdot \frac{V_2 - V_1}{t_A}$$

$$V_2 = \pi \cdot D \cdot \frac{N_2}{60} \qquad V_1 = \pi \cdot D \cdot \frac{N_1}{60} \qquad R = \frac{D}{2}$$

$$\therefore T_A = \frac{W}{g} \cdot \frac{\frac{\pi \cdot D}{60} \cdot (N_2 - N_1)}{t_A} \cdot \frac{D}{2}$$

$$= \frac{\pi \cdot W \cdot D}{60 \cdot g} \cdot \frac{N_2 - N_1}{t_A} \cdot \frac{D}{2}$$

$$= \frac{W \cdot D^2}{375} \cdot \frac{N_2 - N_1}{t_A} \text{ [kgf·m]}$$

$W \cdot D^2 = GD^2$ (Flywheel effect [kgm²])

$$\therefore T_A = \frac{GD^2}{375} \cdot \frac{N_2 - N_1}{t_A} \text{ [kgf·m]}$$

7. Synchronized Speed of AC Motor N_o [r/min]

$$N_0 = \frac{120 \cdot f}{P} \text{ [r/min]}$$

f: Power supply frequency [Hz]
P: Number of motor poles

8. Rated Speed of AC Motor N [r/min]

$$N = N_0 (1 - s) \text{ [r/min]}$$

N_0: Synchronized speed [r/min]
s: Slippage

Lubrication

Warranty Standard

Warranty period	Warranty for the CYCLO® DRIVE shall be 24 months from the shipment date, limited to new units.
Warranty Condition	In the event that any problem or damage to the Product arises during the"Warranty Period" from defects in the Product whenever the Product is properly installed and combined with the Buyer's equipment or machines, maintained as specified in the maintenance manual, and properly operated under the conditions described in the catalog or as otherwise agreed upon in writing between the Seller and the Buyer or its customers; the Seller will provide, at its sole discretion, appropriate repair or replacement of the Product without charge at a designated facility, except as stipulated in the "Warranty Exclusions" as described below. However, if the Product is installed or integrated into the Buyer's equipment or machines, the Seller shall not reimburse the cost of: Removal or re-installation of the Product or other incidental costs related thereto, any lost opportunity, any profit loss or other incidental or consequential losses or damages incurred by the Buyer or its customers.
Warranty Exclusions	Notwithstanding the above warranty, the warranty as set forth herein shall not apply to any problem or damage to the Product that is caused by: 1. installation, connection, combination or integration of the Product in or to the other equipment or machine that is rendered by any person or entity other than the Seller; 2. insufficient maintenance or improper operation by the Buyer or its customers, such that the Product is not maintained in accordance with the maintenance manual provided or designated by the Seller; 3. improper use or operation of the Product by the Buyer or its customers that is not informed to the Seller, including, without limitation, the Buyer's or its customers, operation of the Product not in conformity with the specifications, or use of lubricating oil in the Product that is not recommended by the Seller; 4. any problem or damage on any equipment or machine to which the Product is installed, connected or combined or on any specifications particular to the Buyer or its customers; 5. any changes, modifications, improvements or alterations to the Product or those functions that are rendered on the Product by any person or entity other than the Seller; 6. any parts in the Product that are supplied or designated by the Buyer or its customers; 7. earthquake, fire, flood, sea-breeze, gas, thunder, acts of God or any other reasons beyond the control of the Seller; 8. normal wear and tear, or deterioration of the Product's parts, such as bearings, oil-seals; 9. any other troubles, problems or damage to the Product that are not attributable to the Seller.

Warning

⚠ SAFETY PRECAUTIONS

- Observe safety rules for installation site and equipment strictly (Industrial Safety and Health Law, Technical Standard for Electric Facilities, Extension Rules, Plant Explosion guidelines, Building Standards Law, etc.)
- Read the maintenance manual carefully before use. Request one from the distributor you purchased from or our sales department if it is not handy. The maintenance manual must reach the actual user.
- Select an appropriate product to match the operating environment and application.
- Install protective equipment on the machine side when the machine is used for passenger transportation and elevators, escalators, and dumb waiters.
- Use a flameproof type motor for use in explosive environment. Select a flameproof type motor with appropriate specifications sufficient for hazardous locations.
- Either mount a control filter or a reactor on the inverter side or use a sufficiently insulated motor when a 400V class inverter is used to drive motor. Install an oil pan or other devices to prevent oil or grease leakage, just in case of failure or termination of service life, for oil-sensitive applications such as food processing and clean rooms.